PESHAWAR ELECTRIC SUPPLY COMPANY LIMITED

Tel: 9212025
Fax: 9211987

OFFICE OF THE
CHIEF EXECUTIVE OFFICER
PESCO, PESHAWAR

No: 7290-91/FD/PESCO/CP&C

Dated: 03 /06/2021

Registrar
National Electric Power Regulatory Authority,
NEPRA Tower, Attaturk Avenue (East),
G-5/1, Islamabad.

Subject: **MULTI-YEAR TARIFF PETITION OF PESCO FOR FY 2020-21 TO FY 2024-25 IN LIGHT OF NEPRA (AMENDMENT) ACT, 2018**

Enclosed please find herewith Multi-Year Tariff Petition of PESCO for FY 2020-21 to FY 2024-25 separately for "Distribution Tariff and Supply of Power Tariff" along with copy of board resolution and affidavit as per details below:

a) Tariff petition for Supply of Power Tariff for FY 2020-21 to FY 2024-25 along with requisite standardized tariff petition formats.

b) Tariff petition for Distribution Tariff for FY 2020-21 to FY 2024-25 along with requisite standardized tariff petition formats.

c) Distribution Company Integrated Investment Plan along with annexures.

d) The cross cheque regarding Tariff Petition fee amounting to Rs. 1,031,931/- after deduction of Income Tax of Rs. 89,733/- for Distribution Tariff Petition & separate cross cheque of Rs. 1,031,931/- after deduction of Income Tax of Rs. 89,733/- for Supply of Power Tariff Petition and Bank draft of Rs. 1000/- is also attached.

For n/a please.
- Adl. Dir (I/DR-II)
- MF
copy to
ADG Ltr I

4/6/21
u. Chairman
- MCT/CA,
- M(HC)
- M(MKE)

CHIEF EXECUTIVE OFFICER
PESCO PESHAWAR

Cc to:

Section Officer (Tariff), Ministry of Energy (Power Division), Islamabad for information.

PESCO Tariff Petition under Section 20 for function of Distribution of Electric Power for FY 2020-21 to FY 2024-25

PESHAWAR ELECTRIC SUPPLY COMPANY LIMITED

MULTIYEAR PETITION FOR DETERMINATION OF CONSUMER END TARIFF

FOR FY 2020-21 to FY 2024-25

Before

The Honorable National Electric Power Regulatory Authority

1. PETITION SUMMARY

1.2 Details of Petitioner

Peshawar Electric Supply Company Ltd. Wapda House, Shami Road, Peshawar (referred hereunder as PESCO) was incorporated on 23rd April 1998. It was organized to take over all the properties, rights, obligations and liabilities of Water and Power Development Authority (WAPDA). NEPRA granted Distribution License No.07/DL/2002 to PESCO on 30-04-2002 for electricity distribution in Khyber Pakhtunkhwa jurisdiction of PESCO.

1.2 PESCO is represented by the following duly authorized persons:

- Engr. Muhammad Jabbar Khan — Chief Executive Officer
- Engr. Khadim Hussain Lara — Chief Engineer (P&E)
- Engr. Asim Raza, — Chief Engineer (T&G)
- Engr. Main Dilawar Shah — Chief Engineer Development (PMU)
- Engr. Javed Iqbal — Chief Operation Officer
- Engr. Sher Dad Khan — Chief Commercial Officer / CE (O&M) Dis.
- Mr. Zamir Hussain Kolachi — DG (Human Resource)
- Mr. Raees Haider — DY. GM Finance / Finance Director

2. GROUNDS FOR PETITION

Respectfully submitted,

2.1 That NEPRA, under the regulation of Generation, Transmission and Distribution of Electric Power Act, 1997 (hereinafter NEPRA Act), amended by the act of parliament, wherein, it has been enacted this Act shall be called the Regulation of Generation, Transmission and Distribution of Electric Power (Amendment) Act 2018, is responsible for regulating the electricity sector in Pakistan which includes determining the Revenue Requirement, tariffs and other terms and conditions for the supply of electricity by the Generation, Transmission and Distribution Companies and to recommend the same to the Federal Government for notification. For this purpose, NEPRA has laid down certain guidelines and procedures under the NEPRA Tariff Standards and Procedures Rules, 1998 and subsequent amendments made in the act. This petition is being filed in the light of updated NEPRA Act, wherein through the act of parliament the wire business has been separated from the Commercial services of a Distribution Company, according to NEPRA Act, Distribution Licensee under section 20 shall be limited to ownership, operation, management or control of distribution facilities for the movement or delivery to consumer of electric power.

2.2 That PESCO, being a bonafide power distribution licensee, as on the date of amendment of NEPRA Act (amendment 2018) is a deemed supplier licensee, it requires adequate revenues in order to perform its obligatory duties prescribed by NEPRA under the NEPRA Act (amendment 2018), NEPRA Performance Standards (Distribution) Rules 2005, NEPRA Consumer Eligibility Criteria 2003, Distribution License of PESCO and other Obligations as determined by NEPRA from time to time. The main source of funding available to the petitioner for their revenue requirements are; (i) internal efficiency improvements, (ii) generation of adequate revenue through tariff and (iii) funding / borrowings. Internal efficiency improvements require commensurate financial resources either through borrowings or tariff. As per general principles of banking industry, international or local, the financial viability of borrowing organization is always taken as fundamental for lending decisions.

2.9 That in order to fulfill and perform its obligatory duties, as mentioned above, and to ensure financial viability of PESCO by recovering its prudently incurred costs and reasonable return, in order to upkeep and maintain its existing distribution services / network and to support the future investments for expansion of distribution services / network, this Petition is being filed for FY 2020-21 to 2024-25 through its Chief Executive Officer and other officers of PESCO,

who have been duly authorized to sign and file this petition by the Board Of Directors, PESCO, copy of Board resolution is placed at **Annex-A**.

PESCO'S REVENUE REQUIREMENT

The Revenue Requirement of PESCO for Distribution of Electricity has two components i.e Distribution Margin and Financial Charges. The Distribution Margin of Distribution (Non-Sale Elements) comprises of Actual salaries and wages of GSO Circle, PD GSC and PD C&O, XEN Operations etc, since these circles / directorates are responsible for construction, rehabilitation, augmentation and similar activities involved in Distribution (Non-Sale Elements) for providing electricity to the end consumers.

The XEN offices comprises of technical as well as administrative staff, the salaries of technical officer and officials such as XEN, SDO, line man, assistant line man, line supervisor etc. have been allocated to Distribution (Non-Sale Elements) on actual basis except for meter reader, bill distributer and meter reader supervisor, as the same has been allocated to Power Supply (Sale of Electric Power) as their job description relates to billing and recovery. Moreover, the expenditure of HQ, and other offices has been allocated on the most suitable basis to Distribution (Non-Sale Elements) or Power Supply (Sale of Electric Power).

Distribution Margin is calculated in the light of NEPRA guidelines for determination of consumer end tariff and is equally important as PESCO must earn sufficient distribution margin and adequate stream of cash flow to maintain its system, discharge its financial commitments, invest to expand and maintain the network and to provide a reasonable return to the sponsors on their investment.

In view of the above, PESCO is submitting the tariff petition for the period FY 2020-21 to 2024-25 in light of the Nepra (Amendment) Act 2018, under Section 20 for Distribution. Following are the cost categories to be considered for Distribution Licensee:

A) Distribution Margin.

B) Financial Charges.

1. DISTRIBUTION MARGIN:

The Distribution Margin consists of the following factors:

- Operation & Maintenance Expenses:
  - Operational Expenses:
    - Salary Wages & Other Benefits
    - Travelling Expenses
    - Vehicle Expenses
    - Other Expenses
  - Repairs & Maintenance Expenses
  - Other Income
- Depreciation Expense
- Return on Rate Base

The sum of the O&M Cost, Depreciation, Provision for Bad Debts and RORB minus Other Income results in PESCO's Distribution Margin, dividing this by the total units sold yields the average Distribution Margin per Kwh. The DM of PESCO for Distribution Licensee for FY 2019-20 was Rs. 2.10/Kwh and the DM for FY 2020-21 to FY 2024-25 is projected Rs. 2.33/Kwh, 2.49/Kwh, 2.68/Kwh, 2.88/Kwh & 3.02/Kwh respectively.

i. O&M EXPENSES

O&M expenses include Salaries & Wages, Repair & Maintenance, Travelling, Vehicle Running and Other Expenses. Based on the impact of increase in inflation, salaries and other allowances, the Audited O&M Expense for Distribution (Non-Sale Elements) for FY 2019-20 was Rs. 13,662 Million and the projections for FY 2020-21 to 2024-25 are as per detail below:

Rs. In Million

Rs. In Million

Distribution (Non-Sale Elements) of Power Business							
DESCRIPTION	Audited	Tariff Control Period					Average Tariff Control Period
	Base Year	Test Year	Y1	Y2	Y3	Y4	
	FY 2019-20 (Actual)	FY 2020-21 (ProV.)	FY 2021-22 (Proj.)	FY 2022-23 (Proj.)	FY 2023-24 (Proj.)	FY 2024-25 (Proj.)	
Salaries and Benefits	12,451	14,922	16,439	18,252	20,722	23,307	18,728
Repair and Maintenance	753	1,100	1,155	1,213	1,273	1,337	1,216
Traveling Expenses	167	250	275	308	345	386	313
Vehicle Expenses	128	195	215	236	260	285	238
Other Expenses	163	200	218	237	257	280	238
Total	13,662	16,667	18,301	20,246	22,857	25,597	20,734

Rs. In Million

Distribution (Non-Sale Elements) of Power Business Rs./Kwh							
DESCRIPTION	Audited	Tariff Control Period					Average Tariff Control Period
	Base Year	Test Year	Y1	Y2	Y3	Y4	
	FY 2019-20 (Actual)	FY 2020-21 (ProV.)	FY 2021-22 (Proj.)	FY 2022-23 (Proj.)	FY 2023-24 (Proj.)	FY 2024-25 (Proj.)	
Salaries and Benefits	1.38	1.58	1.66	1.77	1.92	2.07	1.80
Repair and Maintenance	0.08	0.12	0.12	0.12	0.12	0.12	0.12
Traveling Expenses	0.02	0.03	0.03	0.03	0.03	0.03	0.03
Vehicle Expenses	0.01	0.02	0.02	0.02	0.02	0.03	0.02
Other Expenses	0.02	0.02	0.02	0.02	0.02	0.02	0.02
Total	1.51	1.76	1.85	1.96	2.12	2.27	1.99

Salaries & Wages including employee's retirement benefits is the major component of O&M expense. Since PESCO was incorporated as company in compliance with power sector reform policy of Government of Pakistan and the WAPDA employees working in Area Electricity Board Peshawar gradually become employees of the company in terms of the Man Power Transition Plan, therefore PESCO had to Maintain the GOP pay scales and the terms of employment for the employees which were prevalent in WAPDA. The following additional increases are also made by GoP in its annual budget for FY 2019-20 along with various other impacts:

Increase in Pay & Allowances announced for FY 2020-21:

1. Expected increase in salaries.
2. Enhancement of danger allowance from Rs. 5,000/- to 7,000/- per month for line man.
3. Impact of Additional recruitment.
4. Enhancement of conveyance allowance to disable employees.
5. Assistance package for families of employees who died due to COVID-19 while performing official duties.
6. Adoption of transfer policy.
7. 25% Disparity allowance announced by Federal Government since March-2021 onward.
8. Hiring cost against Market Implementation Regulatory Affair Division (MIRAD) is included in Pay & Allowances.
9. Cost of new hiring as the PESCO is operating with only 47% of existing staff and facing severe shortage of resources and if PESCO could not hire required staff the operations of the company would be unsustainable.
10. Employees Retirement Benefits have been based on the average of annual increase in the last three years audited figures as per the assumption used by the Valuer, Anwar Associates. Accordingly, pension increase of 8% and discount rate of 10% has been assumed.
11. Keeping in view the above increases, the Salaries and Wages are based on the Audited Financial Statement of PESCO for FY 2019-20 and Provisional figure for FY 2020-21 and projected for FY 2021-22 to 2024-25 are as under:

Rs. In Million

Description	2019-20	2020-21	2021-22	2022-23	2023-24	2024-25
	Audited	Provisional	Projected	Projected	Projected	Projected
Pay & Allowances (Regular)	6,077	7,502	8,252	9,078	10,440	12,005
Pay & Allowances (Contract)	174	785	879	993	1,122	1,233
Post-Retirement Benefits including WAPDA Pensioners	5,693	5,930	6,548	7,335	8,221	8,978
Other Benefits	507	705	760	846	939	1,091
Total Salaries & Wages	**12,451**	**14,922**	**16,439**	**18,252**	**20,722**	**23,307**

The O&M expenses are one of the major unknowns for XWDISCOs in Pakistan due to many uncontrollable factors such as statutory implications arising out of increase in salaries (as announced by the Federal Government), increase in certain expenses due to growth in consumer base, this includes increase in maintenance expenses, meter reading expenses, whereas other expenses are directly linked to the rate of petroleum. The employees' cost includes costs related to salaries and benefits of all staff (administrative, operational and security).

To ensure an efficient, coordinated, economical distribution system and to build, maintain and operate the system more systematically, it will be employing a highly skilled and technically proficient team to manage all aspects of the distribution of power to ensure that all key commercial interests of all stakeholders are maintained, protected and prioritized.

The O&M cost needs to be bifurcated into controllable and uncontrollable cost components and the 'Uncontrollable costs' are requested to be trued-up at the end of every year and the 'Controllable costs' should be indexed every year with CPI change less agreed efficiency factor, adjustable in last two years, to pass on the benefit of system efficiency to the consumers.

Controllable Cost:

The controllable O&M costs are projected by assuming an inflation rate of 10% to 11% for each year of the tariff control period excluding the base year. The controllable cost during control period will also increase annually due to new projects (as envisaged in DM) and accordingly this new addition in per unit base cost of controllable component may be allowed in the related year in which project is planned to be completed and indexed subsequently as part of controllable cost component.

Uncontrollable Cost:

With regards to uncontrollable cost different growth rates are projected for different cost streams based on management experience. Uncontrollable cost factors could be affected by growth in employee benefits, consumer growth rates and growth in regulatory fee etc. The uncontrollable cost will also increase annually due to new projects (as envisaged in DIIP) and accordingly projected cost includes impact of new projects.

The detail of controllable and uncontrollable costs is as under:

Controllable Costs	**Uncontrollable Costs**
Travelling Expenses	Pay and Allowances – Existing
Office Supplies & Store handling	Rent, Rate & Taxes
Vehicle Expenses	Injuries & Damages
Power, Light & Water	Collection Expenses
Communication & Postage	Legal Charges
Advertising & Publicity	Management Fee
Subscription & Periodicals	Audit Charges
Misc. Expenses	
Bank Charges	
Insurance Premium	

ADJUSTMENT MECHANISM:

The following adjustment mechanism is proposed:

a. The base year FY 2019-20 does not reflect the true cost rather showing with employees of 13,221 Nos with sanctioned posts of 28,268 Nos and accordingly factor ''N'' is included to account for the new recruitments.

b. Adjustment in Salary & Pension (including pension part of post-retirement benefit) may be linked with the Increase announced by GoP in Annual Budget on actual basis.

c. 5% increase on account of Annual Increment may be allowed.

d. The remaining allowances / benefits may be adjusted on the basis of CPI for controllable costs and on the basis of actual in case of uncontrollable costs.

e. An additional variable **"N"** may be included to account for the New Recruitments against vacant positions and the same may be indexed as proposed above.

f. Another variable "Z" may also be included to account for the cost relating to extra ordinary events with financial implication of Rs. 25 Million or more and the same may be indexed as well.

g. The O&M part of Distribution Margin shall be indexed with CPI subject to adjustment for efficiency gains (X factor). Accordingly, the O&M will be indexed every year according to the following formula:

$$\mathbf{O\&M_{Rev} = [O\&M_{Ref}\ (Controllable\ Cost) * \{1+(\Delta CPI-X)\}] + Uncontrollable\ Cost\ (Actual)+N+Z}$$

Where:

O&M (Rev) = Revised O&M Expense for the Current Year.

O&M (Ref) = Reference O&M Expense for the Reference Year

ΔCPI = Change in Consumer Price Index published by Pakistan Bureau of Statistics latest available on 1st July against the CPI as on 1st July of the Reference Year in terms of percentage.

X = Efficiency factor

N = New Hiring including indexation of controllable and uncontrollable costs.

Z = Cost relating to extraordinary events including indexation with financial impact of Rs. 25 Million or more.

ii. REPAIR & MAINTENANCE EXPENSES:

Repair and Maintenance expenses have been assumed @ around 2% of the net Fixed Assets in operation. PESCO has to maintain its old and over loaded system in order to ensure un-interrupted power supply to the consumers, moreover cost of material has also increased due to inflationary pressure. Therefore, Repair & Maintenance expenditure has been projected for Distribution (Non-Sale Elements) as Rs. 1,100 Million for FY 2020-21, Rs. 1,155 Million for FY 2021-22, Rs. 1,213 Million for FY 2022-23, Rs. 1,273 Million for FY 2023-24 & Rs. 1,337 Million for FY 2024-25. Repair and Maintenance budget is required for the following:

1. Repair of Power Transformers damaged at Grid Stations and controlling Breakers, Isolators etc.
2. Repairs and Maintenance of 3,722 KM Transmission Lines.
3. Repair & Maintenance of 1,116 Nos 11KV feeders.
4. Repair & Maintenance of 37,220 KMs HT Lines.
5. Repair & Maintenance of 45,311 KMs LT Lines.
6. Repair & Maintenance of 78,759 Nos of Distribution Transformers

Repair & Maintenance Cost for Tariff Control Period

Rs. in Million

Distribution (Non-Sale Elements) of Power Business												
DESCRIPTION	Base Year		Test Year		Y1		Y2		Y3		Y4	
	FY 2019-20 (Actual)		FY 2020-21 (ProV.)		FY 2021-22 (Proj.)		FY 2022-23 (Proj.)		FY 2023-24 (Proj.)		FY 2024-25 (Proj.)	
	Distribution (Non-Sale Elements)	Rs./Kwh	Distribution (Non-Sale Elements)	Rs./Kwh	Distribution (Non-Sale Elements)	Rs./Kwh	Distribution (Non-Sale Elements)	Rs./Kwh	Distribution (Non-Sale Elements)	Rs./Kwh	Distribution (Non-Sale Elements)	Rs./Kwh
Repair And Maintenance	753	0.08	1,100	0.12	1,155	0.12	1,213	0.12	1,273	0.12	1,337	0.12
% Increase/ (Decrease)			46%	50%	5%	0%	5%	0%	5%	0%	5%	0%

ADJUSTMENT MECHANISM:

The following adjustment mechanism is proposed:

a. Adjustment in Repair & Maintenance may be linked with the percentage of Fixed Assets (i.e. 2% of the net Fixed Assets) in operation and WPI.

iii. TRAVELLING EXPENSES:

Travelling Expenses for Distribution (Non-Sale Elements) have been projected Rs. 250 Million, Rs. 275 Million Rs. 308 Million Rs. 345 Million & Rs. 386 Million for FY 2020-21 to FY 2024-25 respectively.

Rs. in Million

Distribution (Non-Sale Elements) of Power Business												
DESCRIPTION	Base Year		Test Year		Y1		Y2		Y3		Y4	
	FY 2019-20 (Actual)		FY 2020-21 (ProV.)		FY 2021-22 (Proj.)		FY 2022-23 (Proj.)		FY 2023-24 (Proj.)		FY 2024-25 (Proj.)	
	Distribution (Non-Sale Elements)	Rs./Kwh	Distribution (Non-Sale Elements)	Rs./Kwh	Distribution (Non-Sale Elements)	Rs./Kwh	Distribution (Non-Sale Elements)	Rs./Kwh	Distribution (Non-Sale Elements)	Rs./Kwh	Distribution (Non-Sale Elements)	Rs./Kwh
Traveling Expenses	167	0.02	250	0.03	275	0.03	308	0.03	345	0.03	386	0.03
% Increase/ (Decrease)			50%	50%	10%	0%	12%	0%	12%	0%	12%	0%

ADJUSTMENT MECHANISM:

The following adjustment mechanism is proposed:

a. Adjustment in Travelling Expenses may be linked with the CPI.

iv) VEHICLE RUNNING EXPENSES:

Vehicle Running Expenses for Distribution (Non-Sale Elements) were Rs. 128 million for the FY 2019-20 and projected for FY 2020-21 to FY 2024-25 as Rs. 195 Million, 215 Million, 236 Million, 260 Million & 285 Million respectively. PESCO has a fleet of more than 720 vehicles. Most of the vehicles are old and has completed useful life of 10 years & need major overhauling. Financial position of PESCO does not allow us to replace them with new vehicles. We are left with no option but to maintain them. Moreover, the cost of POL has increased manifolds & the cost of parts of vehicle is also increasing due to inflation, a part from above PESCO's distribution system is spread all over Khyber Pakhtunkhwa Province and it has to be maintained, hence PESCO requires funds for running of vehicles as well as for their maintenance.

Vehicle Running Expenses for Tariff Control Period

Rs. in Million

Distribution (Non-Sale Elements) of Power Business												
DESCRIPTION	Base Year		Test Year		Y1		Y2		Y3		Y4	
	FY 2019-20 (Actual)		FY 2020-21 (ProV.)		FY 2021-22 (Proj.)		FY 2022-23 (Proj.)		FY 2023-24 (Proj.)		FY 2024-25 (Proj.)	
	Distribution (Non-Sale Elements)	Rs./Kwh	Distribution (Non-Sale Elements)	Rs./Kwh	Distribution (Non-Sale Elements)	Rs./Kwh	Distribution (Non-Sale Elements)	Rs./Kwh	Distribution (Non-Sale Elements)	Rs./Kwh	Distribution (Non-Sale Elements)	Rs./Kwh
Vehicle Expenses	128	0.01	195	0.02	215	0.02	236	0.02	260	0.02	285	0.03
% Increase/ (Decrease)			52%	100%	10%	0%	10%	0%	10%	0%	10%	50%

ADJUSTMENT MECHANISM:

The following adjustment mechanism is proposed:

a. Adjustment in Vehicle Running Expenses may be linked with the CPI.

v) **OPERATING EXPENSES:**

Other Expenses include Rent, Rates and Taxes, Utility expenses, communications, office supplies, professional fees, auditor remunerations, outsourced services, management fees, electricity bill collection expenses etc.

Other Operating expenses for Tariff Control Period

Rs. in Million

Distribution (Non-Sale Elements) of Power Business												
DESCRIPTION	Base Year		Test Year		Y1		Y2		Y3		Y4	
	FY 2019-20 (Actual)		FY 2020-21 (ProV.)		FY 2021-22 (Proj.)		FY 2022-23 (Proj.)		FY 2023-24 (Proj.)		FY 2024-25 (Proj.)	
	Distribution (Non-Sale Elements)	Rs./Kwh	Distribution (Non-Sale Elements)	Rs./Kwh	Distribution (Non-Sale Elements)	Rs./Kwh	Distribution (Non-Sale Elements)	Rs./Kwh	Distribution (Non-Sale Elements)	Rs./Kwh	Distribution (Non-Sale Elements)	Rs./Kwh
Other s Expenses	163	0.02	200	0.02	218	0.02	237	0.02	257	0.02	280	0.02
% Increase/ (Decrease)			23%	0%	9%	0%	9%	0%	8%	0%	9%	0%

ADJUSTMENT MECHANISM:

The following adjustment mechanism is proposed:

a. Adjustment in Other Operating Expenses may be linked with the CPI.

vi) DEPRECIATION

Depreciation is calculated on the basis of the value of existing Assets plus the additions in assets during the FY 2020-21, Actual depreciation for FY 2019-20 was Rs. 2,723 Million. The assets are depreciated on straight line method as per utility practice i.e land @ 0 %, buildings and civil works @ 2%, Plant and machinery @ 3.5%, office equipment and mobile plant @ 10% and other assets @ 10% based upon these assumptions the figure for depreciation has been worked as Rs. 3,000 Million for FY 2020-21, Rs. 3,416 Million for FY 2021-22, Rs. 3,812 Million for FY 2022-23, Rs. 4,154 Million for FY 2023-24 & Rs. 4,373 Million for FY 2024-25.

Depreciation Expense for Tariff Control Period

Rs. in Million

Distribution (Non-Sale Elements) of Power Business												
DESCRIPTION	Base Year		Test Year		Y1		Y2		Y3		Y4	
	FY 2019-20 (Actual)		FY 2020-21 (ProV.)		FY 2021-22 (Proj.)		FY 2022-23 (Proj.)		FY 2023-24 (Proj.)		FY 2024-25 (Proj.)	
	Distribution (Non-Sale Elements)	Rs./Kwh	Distribution (Non-Sale Elements)	Rs./Kwh	Distribution (Non-Sale Elements)	Rs./Kwh	Distribution (Non-Sale Elements)	Rs./Kwh	Distribution (Non-Sale Elements)	Rs./Kwh	Distribution (Non-Sale Elements)	Rs./Kwh
Depreciation	2,723	0.30	3,000	0.32	3,416	0.35	3,812	0.37	4,154	0.39	4,373	0.39
% Increase/ (Decrease)			10%	7%	14%	9%	12%	6%	9%	5%	5%	0%

ADJUSTMENT MECHANISM:

The following adjustment mechanism is proposed:

a. Adjustment in Depreciation Expenses may be linked with the Gross Fixed Assets in operation.

vii) **RETURN ON RATE BASE (RORB):**

NEPRA allowed WACC to PESCO 10.95% for FY 2018-19 and 15.02% for FY 2019-20 in its tariff determination for FY 2018-19 & FY 2019-20, PESCO has reservation on the calculation of allowed WACC of 10.95%. PESCO has calculated WACC of 14.06% based on the following calculations:

Description	Loan Amount (Mln. Rs.)	Rate of Interest Taken by NEPRA FY 2019-20	Actual Rate of Interest	Actual Exchange Risk Coverage	Modified Rate of Interest
ADB- Trench I	847	14.97%	11%	6.00%	17.66%
ADB- Trench II,III,IV	4,600		8.20%	6.80%	15.56%
ERRA	1,362		1%	Dollar based loan	1%
Total	**6,809**				**13.18%**

*Weighted Average Cost of Debt for FY 2019-20 include 3 month's Kibor plus 2% spread.

By incorporating the above adjustment of ERC, the calculation of WACC and RORB will be as under:

WACC = [16.11%*20%] + [13.18%*70%] = **14.06%**

The Authority has taken the assumptions without even considering the economic conditions of KPK and the effect of war on terror on the business environment in which PESCO is providing services and hence it needs to be reconsidered. NEPRA used different assumptions for the calculation of WACC in every two to three years from FY 2014-15 to FY 2019-20 instead of applying the assumptions consistently, thereby reducing the amount of WACC on one pretext or the other, which needs to be reconsidered. The Authority is requested to apply the assumption consistently for a reasonable control period instead of changing it every third to fourth year.

Firstly, for the assessment of ROE component, weighted average yield on 05 years Pakistan investment bond (PIB) as of June 13, 2018 has been considered as risk free rate which is 8.4795% for FY 2018-19 & 13.7687% for FY 2019-20. Moreover, the rate of return on KSE-100 index over a period of 8 years was around 15% (same figure as was used in previous determination and no detail

provided neither in respect of base years nor any other detail to comment). The same translated in to risk premium of around 6.521% for FY 2018-19 and 1.23% (very low) for FY 2019-20 and on the other hand, the risk premium used by different brokerage houses of the country ranges from 6% to 7%.

Authority assumed market risk premium of 6.521% & 1.23%(very low) which may be reconsidered as only Karachi generates almost 60% of the business activity as compared to Peshawar which is 200% folds higher. These assumptions were considered without even considering the economic conditions of KPK and the effect of war on terror on the business environment in which PESCO is operating. Accordingly, the area of operation and the economic conditions of the area needs to be considered and necessary adjustments may be made to the risk premium because of the fact that the market in Khyber Pakhtunkhwa is riskier than that of other parts of the country and a margin of 2% to 3% may be added to the new base line. The linking of return with Transmission & Distribution losses margin allowed by Authority does not hold ground as the same has been substantially reduced by the Authority together with heavy deduction of the allowed provision for bad debts of FY 2015-16. Moreover, the Power Purchase Price is a pass through item and relates to the cost and has no co-relation with return which is for the equity holders.

Another assumption was made by Authority for measurement of Beta, in order to arrive at a suitable measure, Authority conducted an in house analysis and arrived at appropriate measure of 1.10 and it is the same as was used during 2015-16, which means the economic conditions are stable even in the wake of pandemic COVID 19, hence needs to be reconsidered.

Moreover, to ascertain the cost of debt Authority has decided to take cost of debt as 3 months KIBOR+2.00% spread (200 basis points). Since 2015-16 authority used 3 months KIBOR+2.75% spread, however, the authority used 2.00% spread for FY 2017-18 &FY 2018-19 without any reason and it only seems to reduce the return of PESCO. The Authority is requested to apply the assumptions consistently and firstly the cost of debt may be allowed on the basis of the outstanding loans of PESCO otherwise may allow a spread of 2.75% as was previously allowed during FY 2016-17 and FY 2017-18.

By considering the spread of 2.75% the cost of Debt would be revised to 9.68% for FY 2018-19 i.e. 3 months KIBOR of 6.93% as of July 3rd July, 2018 plus 2.75% spread, similarly for FY

2019-20 it should be 16.63% i.e. 3 months KIBOR of 13.88% as of 25thJuly, 2019 plus 2.75% spread (actual 3 months KIBOR of25thJuly, 2019 is 13.88% instead of 12.97% as used by Nepra).

As per amortization schedule provided by Economic Affairs Division (EAD) for ADB Trench-I, II, III & IV PESCO has to pay the interest charges as well the exchange risk and Principal repayments.

PESCO has no other source of revenue except Tariff to pay off the principal, interest and exchange risk payable to EAD except for consumer end Tariff and if not allowed, it will in any way effect the consumers as the same will be passed in the form of deficit financing resulting in financial hardship to the consumers.

Rs. in Million

Description	FY 2019-20 Audited	FY 2020-21 Act/Prov.	FY 2021-22 Projected	FY 2022-23 Projected	FY 2023-24 Projected	FY 2024-25 Projected
Gross Fixed Assets In Operation–Opening Balance	83,299	87,395	96,996	110,194	122,747	133,604
Addition in Fixed Assets	4,096	9,600	13,199	12,553	10,857	6,966
Gross Fixed Assets In Operation–Closing Balance	87,395	96,996	110,194	122,747	133,604	140,570
Less Accumulated Depreciation	32,191	35,525	39,321	43,556	48,171	53,030
Net Fixed Assets in Operation	55,204	61,471	70,874	79,191	85,433	87,540
Add: Capital Work in Progress-Closing Balance	19,756	20,369	21,211	22,013	22,706	23,150
Investment in Fixed Assets	74,960	81,840	92,085	101,204	108,138	110,690
Less Deferred Credits	32,776	35,894	36,244	37,479	38,145	39,708
Regulatory Assets Base	42,184	45,946	55,841	63,724	69,994	70,983
Average Regulatory Assets Base	41,400	44,066	50,893	59,782	66,859	70,488
Rate of Return	15.02%*	14.06%	14.06%	14.06%	14.06%	14.06%
Return on Rate Base	**6,218**	**6,196**	**7,156**	**8,405**	**9,400**	**9,911**

*NEPRA Determined Rate of Return for FY 2018-19 & FY 2019-20.

PESCO is of the opinion that return should be adequate enough to not only cover the cost of debt but also to cater for the exchange rate parity as well as reasonable return to the equity holders. Authority is therefore requested to allow RORB @14.06% WACC, including debt as per following calculations and further projection is also being made for the tariff control period:

The details of RORB is as under:

Rs. in Million

Distribution (Non-Sale Elements) of Power Business												
DESCRIPTION	Base Year		Test Year		Y1		Y2		Y3		Y4	
	FY 2019-20 (Actual)		FY 2020-21 (ProV.)		FY 2021-22 (Proj.)		FY 2022-23 (Proj.)		FY 2023-24 (Proj.)		FY 2024-25 (Proj.)	
RORB	Distribution (Non-Sale Elements)	Rs./Kwh	Distribution (Non-Sale Elements)	Rs./Kwh	Distribution (Non-Sale Elements)	Rs./Kwh	Distribution (Non-Sale Elements)	Rs./Kwh	Distribution (Non-Sale Elements)	Rs./Kwh	Distribution (Non-Sale Elements)	Rs./Kwh
	4,975	0.55	4,957	0.52	5,725	0.58	6,725	0.65	7,521	0.70	7,929	0.70

viii) **OTHER INCOME:**

The main sources of other income include Interest Income, Sale of Scrape, Amortization of Deferred Credit, Rental & Service Income etc excluding Wheeling Charges and Late Payment Surcharges. The details of other income for FY 2019-20 to FY 2024-25 are as under:-

Rs. in Million

Distribution (Non-Sale Elements) of Power Business												
DESCRIPTION	Base Year		Test Year		Y1		Y2		Y3		Y4	
	FY 2019-20 (Actual)		FY 2020-21 (ProV.)		FY 2021-22 (Proj.)		FY 2022-23 (Proj.)		FY 2023-24 (Proj.)		FY 2024-25 (Proj.)	
	Distribution (Non-Sale Elements)	Rs./Kwh	Distribution (Non-Sale Elements)	Rs./Kwh	Distribution (Non-Sale Elements)	Rs./Kwh	Distribution (Non-Sale Elements)	Rs./Kwh	Distribution (Non-Sale Elements)	Rs./Kwh	Distribution (Non-Sale Elements)	Rs./Kwh
Other Income	2,381	0.26	2,611	0.28	2,872	0.29	3,159	0.31	3,475	0.32	3,823	0.34
% Increase/ (Decrease)			10%	8%	10%	4%	10%	7%	10%	3%	10%	6%

Based on above the projections the Distribution Margin (DM) for FY 2020-21 to 2024-25 for Distribution (Non-Sale Elements) of power business is as under:

Rs. in Million

Distribution (Non-Sale Elements) of Power Business												
	Base Year		Test Year		Y1		Y2		Y3		Y4	
DESCRIPTION	FY 2019-20 (Actual)		FY 2020-21 (ProV.)		FY 2021-22 (Proj.)		FY 2022-23 (Proj.)		FY 2023-24 (Proj.)		FY 2024-25 (Proj.)	
	Distribution (Non-Sale Elements)	Rs./Kwh	Distribution (Non-Sale Elements)	Rs./Kwh	Distribution (Non-Sale Elements)	Rs./Kwh	Distribution (Non-Sale Elements)	Rs./Kwh	Distribution (Non-Sale Elements)	Rs./Kwh	Distribution (Non-Sale Elements)	Rs./Kwh
O & M Expenses	13,662	1.51	16,667	1.76	18,301	1.85	20,246	1.96	22,857	2.12	25,597	2.27
Depreciation	2,723	0.30	3,000	0.32	3,416	0.35	3,812	0.37	4,154	0.39	4,373	0.39
RORB	4,974	0.55	4,957	0.52	5,725	0.58	6,725	0.65	7,521	0.70	7,929	0.70
Gross DM	**21,360**	**2.36**	**24,624**	2.61	**27,442**	2.78	**30,782**	2.98	**34,532**	3.20	**37,899**	3.36
Less: Other Income	(2,381)	(0.26)	(2,611)	(0.28)	(2,872)	(0.29)	(3,159)	(0.31)	(3,475)	(0.32)	(3,823)	(0.34)
Net DM	**18,979**	**2.10**	**22,013**	**2.33**	**24,571**	**2.49**	**27,623**	**2.68**	**31,057**	**2.88**	**34,076**	**3.02**

SUMMARY OF EVIDENCE & RELIEF SOUGHT:

a. RELIEF / DETERMINATION SOUGHT

In support of the petition in hand the standard formats are enclosed as per requirement;

- Approval of Category wise Tariff for FY 2020-21 to 2024-25 – Form 27
- Approval of Revenue Requirement for FY 2020-21 to 2024-25 – Form 20.
- Summary of Category wise Revenue Requirement for FY 2020-21 to 2024-25 - Form 27 (A).

b. KEY ASSUMPTIONS TO THE FINANCIAL PROJECTIONS/ RELIEF SOUGHT

- **Total Unit Sales:** The units projected for FY 2020-21 to FY 2024-25 are 9,450 Million, 9,875 Million, 10,320 Million, 10,784 Million & 11,269 Million respectively.
- **Target Transmission & Distribution Losses:** The losses have been projected at 37.85%, 36.83%, 35.78%, 34.72% & 33.64% for FY 2020-21 to FY 2024-25 respectively.
- The Financial Projections are made on the basis of existing notified tariff and actual T&D losses adjusted with the proposed tariff.
- It is pertinent to mention here that PESCO BoD in its 149th meeting held on 28-10-2020 authorized to file Single Year Tariff Petition for FY 2020-21, however, PESCO could not able to file the same because of the directions issued by the Authority to file Multi Year Tariff Petition for a period of five years. Accordingly, PESCO is filing this Multi Year Tariff Petition for the period FY 2020-21 to FY 2024-25 specifically on the directions of Nepra as given in PESCO Tariff Determination for FY 2018-19 and FY 2019-20 reproduced as under:

  ".....*File Multi Year Tariff Petition for a tariff control period of five year to avoid any delay in tariff determinations*".
- Moreover, it is apprised that NEPRA granted Distribution License (**No.07/DL/2002**) to PESCO dated 30th April, 2002 for a period of twenty (20) years, which means that the Distribution License of PESCO is valid till April, 2022. As mentioned above, PESCO is filing Multi Year Tariff Petition for FY 2020-21 to FY 2024-25 (05 years) as per the directions of the Authority, accordingly it is requested to consider the petition in

anticipation of License renewal. In the meanwhile, PESCO will apply for the extension of its license as per regulatory requirement.

- That in view of the grounds and facts mentioned above, it is respectively prayed that while admitting and allowing this petition, the Tariff of PESCO for the FY 2020-21 to 2024-25 as per the actual expenditure of FY 2019-20, may very graciously be determined as proposed, keeping in view the following:

    - Ensuring the financial viability of the petitioner for the reliable supply of electricity to its over 3.9 Million consumers;
    - Timely Determination of Tariff along with its monthly adjustments or quarterly adjustments as proposed, providing sufficient time to the petitioner for the recovery of the Determined Revenue Requirement;
    - Fixing of target of T&D losses by taking a realistic approach;
    - Approving the investment plan of Rs. 10,213 Million, Rs. 14,041 Million, Rs. 13,354 Million, Rs. 11,550 Million & Rs. 7,411 Million for FY 2020-21 to FY 2024-25 as projected.
    - Allowing DM Rs. 22,013 million, Rs. 24,571 million, Rs. 27,623 million, Rs. 31,056 million & Rs. 34,076 million for FY 2020-21 to FY 2024-25 as projected.
    - To allow WACC @ 14.06%.
    - Any other relief.

PETITIONER

THE PESHAWAR ELECTRIC SUPPLY COMPANY LTD

Through:

Muhammad Jabbar Khan

Chief Executive Officer PESCO

PESHAWAR ELECTRIC SUPPLY COMPANY

Phone No. + 92.91.9210226
Fax No. + 92.91.9223136

Office of the
Company Secretary PESCO
Wapda House, Shami Road,
Peshawar

No. 766 / Co,Sec/ Dated: 03 .06.2021

BOARD RESOLUTION

Board of Directors PESCO through circulation RESOLVED to authorize Chief Executive Officer and other Officers of PESCO to file Multi Year Tariff Petition , Review Motion (If required) and subsequent adjustments / details etc with NEPRA (Separately for two licensed activities i.e Distribution Business and Supply Business) for the period from FY 2020-21 to FY 2024-25.

He along with other officers of the Company are hereby authorized to sign individually or jointly the necessary documents, appear before the Authority when needed and do all acts necessary for completion and processing of the application.

Certified True Copy

Company Secretary
PESCO
Dated 03.06.2021

Hayat file

0026587

100 Rupees

۱۰۰ روپیہ

AFFIDAVIT

I Muhammad Jabbar Khan S/O Shahgun Bay, Chief Executive Officer, Peshawar Electric Supply Company Limited (Distribution License No. 07/DL/2002) Holding CNIC No. 37405-0355948-5 being duly authorized representative/Attorney of Peshawar Electric Supply Company Limited, hereby solemnly affirm and declare that the contents of this Multi-Year Tariff Petition for FY 2020-21 to FY 2024-25, separately for "Distribution Tariff" and "Supply of Power Tariff" including all supporting documents are true and correct to the best of my knowledge and belief and that nothing has been concealed.

Deponent

(Muhammad Jabbar Khan)
Chief Executive Officer
PESCO

Dated:- 03 / 06 /2021

ATTESTED
Mazhar Ullah Advocate
Oath Commissioner
Distt. Courts Peshawar
27/5/21

FORM - 1

Distribution Business

Peshawar Electric Supply Company

Company Statistics

Peak demand during FY 2019-20	MW	3,230
Number of Consumers	Number	3.9 Million
Area	Sq Km	74,521
Circles	Number	8
Divisions	Number	39
Sub Divisions	Number	187
Length of Feeders	Km	37,220
Average Length of Feeders	Km	34
Maximum Length of Feeder	Km	240
Minimum Length of Feeder	Km	7
Target for new connections	Number	180,789
Length of High Voltage Transmission lines (132 kV)	Km	2,764
Length of STG lines (132, 66 and 33 kV)	Km	3,722
Length of Low Voltage Distribution lines (400 V)	Km	45,311
Number of HV transformers	Number	239
Number of **burned down** HV transformers	Number	1
Number of STG transformers	Number	As above
Number of **burned down** STG transformers	Number	
Number of LV transformers	Number	78,759
Number of **burned down** LV transformers	Number	5,305

Number of Employees	Existing	Dec-21 (Proj.)	Dec-22 (Proj.)	Dec-23 (Proj.)	Dec-24 (Proj.)	Dec-25 (Proj.)
1. Qualified Professionals	382	453	550	571	587	577
Engineers	289	342	439	460	476	466
Others	93	111	111	111	111	111
2. Staff	12,839	20,259	25,120	26,429	27,408	27,634
Technical	7,060	11,425	15,002	15,027	15,027	15,028
Clerical	1,029	1,730	1,922	2,114	2,301	2,326
Non-Technical	4,750	7,104	8,196	9,288	10,080	10,280
3. Total (1+2)	13,221	20,712	25,670	27,000	27,995	28,211
4. Retirements	817	761	888	880	845	783
5. Net Total (3-4)	13,221	19,951	24,782	26,120	27,152	27,428

	Cost					
	Jun-20	Jun-21	Jun-22	Jun-23	Jun-24	Jun-25
		Provisional	Projected	Projected	Projected	Projected
Total	12,451	14,922	16,439	18,252	20,722	23,307

FORM - 2

Distribution of electricity

-Peshawar Electric Supply Company

Profit & Loss Statement

		2020-21	2021-22	2022-23	2023-24	2024-25
		Prov.	Proj.	Proj.	Proj.	Proj.
Power Balances						
Units Received	[MkWh]	15,206	15,632	16,070	16,519	16,982
Units Lost	[MkWh]	5,756	5,757	5,750	5,735	5,713
Units Lost	[%age]	38%	37%	36%	35%	34%
Units Sold	[MkWh]	9,450	**9,875**	**10,320**	**10,784**	**11,269**
Revenue						
Revenue Earned from Wheeling of Electricity	[Mln Rs]	22,013	24,571	27,623	31,056	34,076
Total Sales Revenue	[Mln Rs]	**22,013**	24,571	27,623	31,056	34,076
Amortization of Def Credits	[Mln Rs]	2,611	2,872	3,159	3,475	3,823
Total Revenue	[Mln Rs]	**24,624**	**27,443**	**30,782**	**34,531**	**37,899**
Wheeling Charges Income (TESCO)	[Mln Rs]	1,624	1,619	1,581	1,767	1,846
Total Income Distribution Business	**[Mln Rs]**	**26,248**	**29,062**	**32,363**	**36,298**	**39,745**
Operating Cost		-	-	-	-	-
O&M Expenses	[Mln Rs]	16,667	18,301	20,246	22,857	25,597
Depreciation	[Mln Rs]	3,000	3,416	3,812	4,154	4,373
Total Operating Cost	[Mln Rs]	**19,667**	**21,717**	**24,058**	**27,011**	**29,970**
		-	-	-	-	-
EBIT	[Mln Rs]	**6,581**	**7,345**	**8,305**	**9,287**	**9,775**
EBT	[Mln Rs]	**6,581**	**7,345**	**8,305**	**9,287**	**9,775**
EAT	[Mln Rs]	**6,581**	**7,345**	**8,305**	**9,287**	**9,775**
Profit for the period	[Mln Rs]	6,581	7,345	8,305	9,287	9,775

Peshawar Electric Supply Company

Balance Sheet [in million Rupees] Distribution of Electricity

Description	Projected 2020-21	Projected 2021-22	Projected 2022-23	Projected 2023-24	Projected 2024-25
Intangible Fixed Assets					
Net Fixed Assets in Operations	61,471	70,874	79,191	85,433	87,540
Total Net Fixed Assets in Operations	61,471	70,874	79,191	85,433	87,540
Capital Work in Progress	20,369	21,211	22,013	22,706	23,150
Long Term Loans to Employees	5	5	6	7	8
Deferred Cost & Long Term Deposits					
	20,374	21,216	22,019	22,713	23,158
Current Assets					
Stores & Spares	4,010	4,512	4,959	5,299	5,424
Advances, Prepayments, Other Receivables	63,241	69,289	75,288	81,219	86,994
Cash & Bank Balances of Deposit	3,257	2,761	2,568	2,535	2,632
Total Current Assets	*70,508*	*76,563*	*82,815*	*89,053*	*95,050*
Total Assets	**152,352**	**168,653**	**184,025**	**197,198**	**205,748**
Subscribed Equity	20,176	20,176	20,176	20,176	20,176
Unappropriated Profit	(31,151)	(32,946)	(34,522)	(35,980)	(37,211)
Total Equity	*(10,974)*	*(12,769)*	*(14,346)*	*(15,803)*	*(17,034)*
Long Term Liability					
Liability against Govt Investment	10,337	10,337	10,337	10,337	10,337
Security Deposits	5,505	5,305	5,105	4,855	4,705
Employee Retirement Benefits	83,703	85,022	93,052	95,067	97,035
Deferred Credits	35,894	36,244	37,479	38,145	39,708
Total Long Term Loan					
Total Long Term Liability	*135,439*	*136,908*	*145,973*	*148,403*	*151,785*
Current Liability					
Current Maturity on Long Term Loans					
Other Payable	17,841	33,947	41,073	51,944	57,415
Creditors, Accrued and Other Liabilities	10,046	10,567	11,324	12,654	13,583
Total Current Liability	*27,887*	*44,514*	*52,397*	*64,598*	*70,998*
Total Liabilities and Equity	**152,352**	**168,653**	**184,025**	**197,198**	**205,749**

FORM - 5

Peshawar Electric Supply Company

Cash Flow Statement [in million Rupees] Distribution of Electricity

Description	Projected 2020-21	Projected 2021-22	Projected 2022-23	Projected 2023-24	Projected 2024-25
Outflow from Operations					
Payment for electricity (to CPPA)	0	0	0	0	0
Distribution Service Cost (=DMC)	16,667	18,301	20,246	22,857	25,597
Total Outflow from Operations	***16,667***	***18,301***	***20,246***	***22,857***	***25,597***
Surplus/Deficit from Operations					
Inflows from Other Sources					
Capital Contributions	1,200	1,089	1,009	973	903
Consumer Security Deposits	-	(200)	(200)	(250)	(150)
Other Incomes	1,624	1,619	1,581	1,767	1,846
GOP Subsidy (Actual and Estimated)	0	0	0	0	0
Government Grant	-	-			
Long Term Loan / Redeemable Capital	-	-			
Total Inflows from Other Sources	***2,824***	***2,508***	***2,390***	***2,490***	***2,599***
Outflow Others					
Financial Charges	201	0			
Repayment of Long Term Loans	325	350.00			
Investment Program	10,213	14,041	13,354	11,550	7,411
Working Capital/other Changes	(4,014)	(6,611)	(5,355)	(2,877)	1,560
Total Outflow Others	***6,199***	***7,430***	***7,999***	***8,673***	***8,971***
Surplus/Deficit Others					
Total Inflows (Operations + Others)	22,856	25,236	28,052	31,497	34,664
Total Outflows (Operations + Others)	22,866	25,731	28,245	31,530	34,568
Opening Balance	3,266	3,257	2,761	2,568	2,535
Surplus/Deficit for Fiscal Year	(10)	(495)	(193)	(33)	97
Deficit from Financing/Loans					
Closing Balance	**3,257**	**2,761**	**2,568**	**2,535**	**2,632**

Profit & Loss Statement *(2020-21)*

		Projected Month 1	Month 2	Month 3	1st Qrt's Total	Month 4	Month 5	Month 6	2nd Qrt's Total	Month 7	Month 8	Month 9	3rd Qrt's Total	Month 10	Month 11	Month 12	4th Qrt's Total	Total
Revenue																		
Revenue from Wheeling of Electricity	[Mln Rs]	2,214	2,442	2,208	6,864	1,985	1,704	1,524	5,213	1,576	1,574	1,351	4,501	1,402	1,940	2,092	5,435	22,013
Total Sales Revenue	[Mln Rs]	2,214	2,442	2,208	6,864	1,985	1,704	1,524	5,213	1,576	1,574	1,351	4,501	1,402	1,940	2,092	5,435	22,013
Amortization of Def Credits	[Mln Rs]	263	290	262	814	235	202	181	618	187	187	160	534	166	230	248	645	2,611
Total Revenue	[Mln Rs]	2,476	2,732	2,470	7,679	2,220	1,906	1,705	5,832	1,763	1,761	1,511	5,035	1,569	2,171	2,340	6,079	24,624
Wheeling Charges Income (TESCO)	[Mln Rs]	163	180	163	506	146	126	112	385	116	116	100	332	103	143	154	401	1,624
Operating Cost																		
O&M Expenses	[Mln Rs]	1,676	1,849	1,672	5,197	1,503	1,290	1,154	3,947	1,193	1,192	1,023	3,408	1,062	1,469	1,584	4,115	16,667
Depreciation	[Mln Rs]	302	333	301	936	271	232	208	710	215	215	184	613	191	264	285	741	3,000
Total Operating Cost	[Mln Rs]	1,978	2,182	1,973	6,133	1,773	1,522	1,362	4,658	1,408	1,406	1,207	4,021	1,253	1,734	1,869	4,856	19,667
EBIT	[Mln Rs]	662	730	660	2,052	593	509	456	1,559	471	471	404	1,346	419	580	625	1,625	6,581
EBT	[Mln Rs]	662	730	660	2,052	593	509	456	1,559	471	471	404	1,346	419	580	625	1,625	6,581
EAT	[Mln Rs]	662	730	660	2,052	593	509	456	1,559	471	471	404	1,346	419	580	625	1,625	6,581
Profit for the period	[Mln Rs]	662	730	660	2,052	593	509	456	1,559	471	471	404	1,346	419	580	625	1,625	6,581

Profit & Loss Statement *(2021-22)*

		Projected Month 1	Month 2	Month 3	1st Qrt's Total	Month 4	Month 5	Month 6	2nd Qrt's Total	Month 7	Month 8	Month 9	3rd Qrt's Total	Month 10	Month 11	Month 12	4th Qrt's Total	Total
Revenue																		
Revenue from Wheeling of Electricity	[Mln Rs]	2,471	2,727	2,466	7,664	2,217	1,901	1,702	5,820	1,759	1,582	1,551	4,893	1,609	2,208	2,377	6,194	24,571
Total Sales Revenue	[Mln Rs]	2,471	2,727	2,466	7,664	2,217	1,901	1,702	5,820	1,759	1,582	1,551	4,893	1,609	2,208	2,377	6,194	24,571
Amortization of Def Credits	[Mln Rs]	289	319	288	896	259	222	199	680	206	185	181	572	188	258	278	724	2,872
Total Revenue	[Mln Rs]	2,760	3,046	2,754	8,559	2,476	2,123	1,901	6,500	1,965	1,767	1,733	5,465	1,797	2,466	2,655	6,918	27,443
Wheeling Charges Income (TESCO)	[Mln Rs]	163	180	162	505	146	125	112	383	116	104	102	322	106	146	157	408	1,619
Operating Cost																		
O&M Expenses	[Mln Rs]	1,840	2,031	1,837	5,708	1,651	1,416	1,268	4,335	1,310	1,179	1,156	3,644	1,198	1,645	1,771	4,614	18,301
Depreciation	[Mln Rs]	344	379	343	1,065	308	264	237	809	245	220	216	680	224	307	331	861	3,416
Total Operating Cost	[Mln Rs]	2,184	2,410	2,179	6,774	1,959	1,680	1,504	5,144	1,555	1,399	1,371	4,325	1,422	1,952	2,101	5,475	21,717
EBIT	[Mln Rs]	739	815	737	2,291	663	568	509	1,740	526	473	464	1,463	481	660	711	1,852	7,345
EBT	[Mln Rs]	739	815	737	2,291	663	568	509	1,740	526	473	464	1,463	481	660	711	1,852	7,345
EAT	[Mln Rs]	739	815	737	2,291	663	568	509	1,740	526	473	464	1,463	481	660	711	1,852	7,345
Profit for the period	[Mln Rs]	739	815	737	2,291	663	568	509	1,740	526	473	464	1,463	481	660	711	1,852	7,345

Profit & Loss Statement *(2022-23)*

		Projected Month 1	Month 2	Month 3	1st Qrt's Total	Month 4	Month 5	Month 6	2nd Qrt's Total	Month 7	Month 8	Month 9	3rd Qrt's Total	Month 10	Month 11	Month 12	4th Qrt's Total	Total
Revenue																		
Revenue from Wheeling of Electricity	[Mln Rs]	2,778	3,065	2,770	8,613	2,492	2,139	1,914	6,544	1,978	1,777	1,745	5,501	1,809	2,483	2,673	6,965	27,623
Total Sales Revenue	[Mln Rs]	2,778	3,065	2,770	8,613	2,492	2,139	1,914	6,544	1,978	1,777	1,745	5,501	1,809	2,483	2,673	6,965	27,623
Amortization of Def Credits	[Mln Rs]	318	350	317	985	285	245	219	748	226	203	200	629	207	284	306	796	3,159
Total Revenue	[Mln Rs]	3,096	3,415	3,087	9,598	2,777	2,383	2,133	7,293	2,204	1,981	1,945	6,130	2,016	2,767	2,978	7,761	30,782
Wheeling Charges Income (TESCO)	[Mln Rs]	159	175	159	493	143	122	110	375	113	102	100	315	104	142	153	399	1,581
Operating Cost																		
O&M Expenses	[Mln Rs]	2,036	2,246	2,030	6,313	1,826	1,567	1,403	4,797	1,450	1,303	1,279	4,032	1,326	1,820	1,959	5,105	20,246
Depreciation	[Mln Rs]	383	423	382	1,189	344	295	264	903	273	245	241	759	250	343	369	961	3,812
Total Operating Cost	[Mln Rs]	2,420	2,669	2,413	7,502	2,170	1,863	1,667	5,700	1,723	1,548	1,520	4,791	1,576	2,162	2,328	6,066	24,058
EBIT	[Mln Rs]	835	921	833	2,590	749	643	575	1,968	595	534	525	1,654	544	746	804	2,094	8,305
EBT	[Mln Rs]	835	921	833	2,590	749	643	575	1,968	595	534	525	1,654	544	746	804	2,094	8,305
EAT	[Mln Rs]	835	921	833	2,590	749	643	575	1,968	595	534	525	1,654	544	746	804	2,094	8,305
Profit for the period	[Mln Rs]	835	921	833	2,590	749	643	575	1,968	595	534	525	1,654	544	746	804	2,094	8,305

Profit & Loss Statement *(2023-24)*

Projected

		Month 1	Month 2	Month 3	1st Qrt's Total	Month 4	Month 5	Month 6	2nd Qrt's Total	Month 7	Month 8	Month 9	3rd Qrt's Total	Month 10	Month 11	Month 12	4th Qrt's Total	Total
Revenue																		
Revenue from Wheeling of Electricity	[Mln Rs]	3,125	3,444	3,116	9,685	2,799	2,405	2,151	7,355	2,223	1,999	1,961	6,183	2,033	2,793	3,007	7,833	31,056
Total Sales Revenue	[Mln Rs]	3,125	3,444	3,116	9,685	2,799	2,405	2,151	7,355	2,223	1,999	1,961	6,183	2,033	2,793	3,007	7,833	31,056
Amortization of Def Credits	[Mln Rs]	350	385	349	1,084	313	269	241	823	249	224	219	692	227	313	336	876	3,475
Total Revenue	[Mln Rs]	3,474	3,830	3,465	10,769	3,112	2,674	2,392	8,178	2,472	2,222	2,181	6,875	2,261	3,106	3,343	8,710	34,531
Wheeling Charges Income (TESCO)	[Mln Rs]	178	196	177	551	159	137	122	418	126	114	112	352	116	159	171	446	1,767
Operating Cost																		
O&M Expenses	[Mln Rs]	2,300	2,535	2,293	7,128	2,060	1,770	1,583	5,413	1,636	1,471	1,443	4,551	1,496	2,056	2,213	5,765	22,857
Depreciation	[Mln Rs]	418	461	417	1,295	374	322	288	984	297	267	262	827	272	374	402	1,048	4,154
Total Operating Cost	[Mln Rs]	2,718	2,996	2,710	8,423	2,435	2,091	1,871	6,397	1,934	1,738	1,706	5,378	1,768	2,430	2,615	6,813	27,011
EBIT	[Mln Rs]	934	1,030	932	2,896	837	719	643	2,199	665	598	586	1,849	608	835	899	2,342	9,287
EBT	[Mln Rs]	934	1,030	932	2,896	837	719	643	2,199	665	598	586	1,849	608	835	899	2,342	9,287
EAT	[Mln Rs]	934	1,030	932	2,896	837	719	643	2,199	665	598	586	1,849	608	835	899	2,342	9,287
Profit for the period	[Mln Rs]	934	1,030	932	2,896	837	719	643	2,199	665	598	586	1,849	608	835	899	2,342	9,287

Profit & Loss Statement *(2024-25)*

Projected

		Month 1	Month 2	Month 3	1st Qrt's Total	Month 4	Month 5	Month 6	2nd Qrt's Total	Month 7	Month 8	Month 9	3rd Qrt's Total	Month 10	Month 11	Month 12	4th Qrt's Total	Total
Revenue																		
Revenue from Wheeling of Electricity	[Mln Rs]	3,426	3,780	3,420	10,626	3,072	2,637	2,359	8,068	2,440	2,192	2,153	6,786	2,232	3,066	3,299	8,597	34,076
Total Sales Revenue	[Mln Rs]	3,426	3,780	3,420	10,626	3,072	2,637	2,359	8,068	2,440	2,192	2,153	6,786	2,232	3,066	3,299	8,597	34,076
Amortization of Def Credits	[Mln Rs]	384	424	384	1,192	345	296	265	905	274	246	242	761	250	344	370	964	3,823
Total Revenue	[Mln Rs]	3,810	4,204	3,804	11,818	3,417	2,933	2,623	8,973	2,714	2,438	2,395	7,547	2,482	3,410	3,669	9,561	37,899
Wheeling Charges Income (TESCO)	[Mln Rs]	186	205	185	576	166	143	128	437	132	119	117	368	121	166	179	466	1,846
Operating Cost																		
O&M Expenses	[Mln Rs]	2,574	2,839	2,569	7,982	2,308	1,981	1,772	6,060	1,833	1,647	1,617	5,097	1,676	2,303	2,478	6,458	25,597
Depreciation	[Mln Rs]	440	485	439	1,364	394	338	303	1,035	313	281	276	871	286	393	423	1,103	4,373
Total Operating Cost	[Mln Rs]	3,013	3,324	3,008	9,346	2,702	2,319	2,074	7,096	2,146	1,928	1,894	5,968	1,963	2,697	2,902	7,561	29,970
EBIT	[Mln Rs]	983	1,084	981	3,048	881	756	677	2,314	700	629	618	1,946	640	880	946	2,466	9,775
EBT	[Mln Rs]	983	1,084	981	3,048	881	756	677	2,314	700	629	618	1,946	640	880	946	2,466	9,775
EAT	[Mln Rs]	983	1,084	981	3,048	881	756	677	2,314	700	629	618	1,946	640	880	946	2,466	9,775
Profit for the period	[Mln Rs]	983	1,084	981	3,048	881	756	677	2,314	700	629	618	1,946	640	880	946	2,466	9,775

FORM - 7 (A)

Distribution Company

Line Losses * *(Projected)* 2020-21

		Month 1	Month 2	Month 3	Month 4	Month 5	Month 6	Month 7	Month 8	Month 9	Month 10	Month 11	Month 12	Total
Power Balances														
Units Received	[MkWh]	1,745	1,765	1,377	1,108	964	1,107	1,160	970	967	1,033	1,448	1,563	**15,206**
Units Sold	[MkWh]	950	1,048	948	852	731	654	676	608	597	619	850	915	**9,450**
Units Lost	[MkWh]	795	716	429	256	232	453	484	361	370	414	598	648	**5,756**
Units Lost	[%age]	45.6%	40.6%	31.1%	23.1%	24.1%	40.9%	41.7%	37.3%	38.3%	40.1%	41.3%	41.5%	37.9%
Technical Losses	[%age]	27.3%	24.2%	18.6%	13.8%	14.4%	24.5%	24.9%	22.3%	22.9%	24.0%	24.7%	24.8%	22.2%
Administrative Losses	[%age]	18.3%	16.3%	12.5%	9.3%	9.7%	16.4%	16.8%	15.0%	15.4%	16.1%	16.6%	16.6%	15.7%
Technical Losses at Different Levels														
Transmission Losses 132 kV	[%age]	4.3%	4.3%	4.3%	4.3%	4.2%	4.1%	4.1%	4.1%	4.1%	4.1%	4.2%	4.3%	4.2%
11 kV Losses	[%age]	16.6%	14.9%	12.5%	6.7%	6.7%	17.1%	15.8%	12.5%	12.8%	15.9%	16.3%	15.5%	13.6%
LT Losses	[%age]	6.4%	5.0%	1.8%	2.8%	3.5%	3.3%	5.0%	5.7%	6.0%	4.0%	4.2%	5.0%	4.4%
Total Technical Losses	[%age]	**27.3%**	**24.2%**	**18.6%**	**13.8%**	**14.4%**	**24.5%**	**24.9%**	**22.3%**	**22.9%**	**24.0%**	**24.7%**	**24.8%**	**22.2%**

FORM - 7 (A)

Distribution Company

Line Losses * *(Projected)* 2021-22

		Month 1	Month 2	Month 3	Month 4	Month 5	Month 6	Month 7	Month 8	Month 9	Month 10	Month 11	Month 12	Total
Power Balances														
Units Received	[MkWh]	1,794	1,814	1,415	1,139	990	1,138	1,193	997	994	1,062	1,489	1,606	**15,632**
Units Sold	[MkWh]	993	1,096	991	891	764	684	707	636	624	647	888	956	**9,875**
Units Lost	[MkWh]	801	718	425	249	226	454	486	361	370	415	600	651	**5,757**
Units Lost	[%age]	44.6%	39.6%	30.0%	21.8%	22.8%	39.9%	40.7%	36.2%	37.3%	39.1%	40.3%	40.5%	36.8%
Technical Losses	[%age]	27.1%	24.0%	18.4%	13.6%	14.2%	24.3%	24.7%	22.1%	22.7%	23.8%	24.5%	24.6%	22.0%
Administrative Losses	[%age]	17.6%	15.6%	11.6%	8.2%	8.6%	15.6%	16.0%	14.1%	14.6%	15.3%	15.9%	15.9%	14.8%
Technical Losses at Different Levels														
Transmission Losses 132 kV	[%age]	4.2%	4.2%	4.2%	4.2%	4.1%	4.0%	4.0%	4.0%	4.0%	4.0%	4.1%	4.2%	4.1%
11 kV Losses	[%age]	16.5%	14.8%	12.4%	6.6%	6.6%	17.0%	15.7%	12.4%	12.7%	15.8%	16.2%	15.4%	13.5%
LT Losses	[%age]	6.4%	5.0%	1.8%	2.8%	3.5%	3.3%	5.0%	5.7%	6.0%	4.0%	4.2%	5.0%	4.4%
Total Technical Losses	[%age]	**27.1%**	**24.0%**	**18.4%**	**13.6%**	**14.2%**	**24.3%**	**24.7%**	**22.1%**	**22.7%**	**23.8%**	**24.5%**	**24.6%**	**22.0%**

FORM - 7 (A)

Distribution Company

Line Losses * *(Projected)* 2022-23

		Month 1	Month 2	Month 3	Month 4	Month 5	Month 6	Month 7	Month 8	Month 9	Month 10	Month 11	Month 12	Total
Power Balances														
Units Received	[MkWh]	1,845	1,865	1,455	1,171	1,018	1,170	1,226	1,025	1,022	1,091	1,531	1,651	**16,070**
Units Sold	[MkWh]	1,038	1,145	1,035	931	799	715	739	664	652	676	928	999	**10,320**
Units Lost	[MkWh]	807	720	420	241	219	456	487	361	370	415	602	653	**5,750**
Units Lost	[%age]	43.7%	38.6%	28.8%	20.5%	21.6%	38.9%	39.8%	35.2%	36.2%	38.1%	39.3%	39.5%	35.8%
Technical Losses	[%age]	26.9%	23.8%	18.2%	13.4%	14.0%	24.1%	24.5%	21.9%	22.5%	23.6%	24.3%	24.4%	21.8%
Administrative Losses	[%age]	16.9%	14.8%	10.6%	7.1%	7.6%	14.8%	15.2%	13.3%	13.7%	14.5%	15.1%	15.1%	14.0%
Technical Losses at Different Levels														
Transmission Losses 132 kV	[%age]	4.1%	4.1%	4.1%	4.1%	4.0%	3.9%	3.9%	3.9%	3.9%	3.9%	4.0%	4.1%	4.0%
11 kV Losses	[%age]	16.4%	14.7%	12.3%	6.5%	6.5%	16.9%	15.6%	12.3%	12.6%	15.7%	16.1%	15.3%	13.4%
LT Losses	[%age]	6.4%	5.0%	1.8%	2.8%	3.5%	3.3%	5.0%	5.7%	6.0%	4.0%	4.2%	5.0%	4.4%
Total Technical Losses	[%age]	**26.9%**	**23.8%**	**18.2%**	**13.4%**	**14.0%**	**24.1%**	**24.5%**	**21.9%**	**22.5%**	**23.6%**	**24.3%**	**24.4%**	**21.8%**

FORM - 7 (A)

Distribution Company

Line Losses * *(Projected)* 2023-24

		Month 1	Month 2	Month 3	Month 4	Month 5	Month 6	Month 7	Month 8	Month 9	Month 10	Month 11	Month 12	Total
Power Balances														
Units Received	[MkWh]	1,896	1,917	1,496	1,204	1,047	1,203	1,260	1,054	1,050	1,122	1,573	1,697	**16,519**
Units Sold	[MkWh]	1,085	1,196	1,082	972	835	747	772	694	681	706	970	1,044	**10,784**
Units Lost	[MkWh]	812	721	414	231	212	456	488	359	369	416	603	654	**5,735**
Units Lost	[%age]	42.8%	37.6%	27.7%	19.2%	20.3%	37.9%	38.8%	34.1%	35.2%	37.0%	38.3%	38.5%	34.7%
Technical Losses	[%age]	26.7%	23.6%	18.0%	13.2%	13.8%	23.9%	24.3%	21.7%	22.3%	23.4%	24.1%	24.2%	21.6%
Administrative Losses	[%age]	16.1%	13.9%	9.7%	6.0%	6.5%	14.0%	14.4%	12.4%	12.9%	13.6%	14.3%	14.3%	13.1%
Technical Losses at Different Levels														
Transmission Losses 132 kV	[%age]	4.0%	4.0%	4.0%	4.0%	3.9%	3.8%	3.8%	3.8%	3.8%	3.8%	3.9%	4.0%	3.9%
11 kV Losses	[%age]	16.3%	14.6%	12.2%	6.4%	6.4%	16.8%	15.5%	12.2%	12.5%	15.6%	16.0%	15.2%	13.3%
LT Losses	[%age]	6.4%	5.0%	1.8%	2.8%	3.5%	3.3%	5.0%	5.7%	6.0%	4.0%	4.2%	5.0%	4.4%
Total Technical Losses	[%age]	**26.7%**	**23.6%**	**18.0%**	**13.2%**	**13.8%**	**23.9%**	**24.3%**	**21.7%**	**22.3%**	**23.4%**	**24.1%**	**24.2%**	**21.6%**

FORM - 7 (A)

Distribution Company

Line Losses * *(Projected)* 2024-25

		Month 1	Month 2	Month 3	Month 4	Month 5	Month 6	Month 7	Month 8	Month 9	Month 10	Month 11	Month 12	Total
Power Balances														
Units Received	[MkWh]	1,949	1,971	1,538	1,238	1,076	1,237	1,296	1,083	1,080	1,153	1,617	1,745	**16,982**
Units Sold	[MkWh]	1,133	1,250	1,131	1,016	872	780	807	725	712	738	1,014	1,091	**11,269**
Units Lost	[MkWh]	816	720	407	221	204	456	489	358	368	415	604	654	**5,713**
Units Lost	[%age]	41.9%	36.6%	26.5%	17.9%	18.9%	36.9%	37.7%	33.0%	34.1%	36.0%	37.3%	37.5%	33.6%
Technical Losses	[%age]	26.5%	23.4%	17.8%	13.0%	13.6%	23.7%	24.1%	21.5%	22.1%	23.2%	23.9%	24.0%	21.4%
Administrative Losses	[%age]	15.4%	13.1%	8.7%	4.9%	5.3%	13.2%	13.6%	11.5%	12.0%	12.8%	13.5%	13.5%	12.2%
Technical Losses at Different Levels														
Transmission Losses 132 kV	[%age]	3.9%	3.9%	3.9%	3.9%	3.8%	3.7%	3.7%	3.7%	3.7%	3.7%	3.8%	3.9%	3.8%
11 kV Losses	[%age]	16.2%	14.5%	12.1%	6.3%	6.3%	16.7%	15.4%	12.1%	12.4%	15.5%	15.9%	15.1%	13.2%
LT Losses	[%age]	6.4%	5.0%	1.8%	2.8%	3.5%	3.3%	5.0%	5.7%	6.0%	4.0%	4.2%	5.0%	4.4%
Total Technical Losses	[%age]	**26.5%**	**23.4%**	**17.8%**	**13.0%**	**13.6%**	**23.7%**	**24.1%**	**21.5%**	**22.1%**	**23.2%**	**23.9%**	**24.0%**	**21.4%**

FORM - 8

Operational and Technical Information

DISCO load factors on yearly basis		**65%**
NTDC/DISCO Delivery Points metering accuracy		**100%**
DISCO metering accuracy For all customers (residential, commercial, industrial, etc.)	All OK with ±	**1.00%**
Estimated High Voltage Transmission lines losses (132 kV)		**4.02%**

FORM - 9
Peshawar Electric Supply Company
Average Rate per Unit Purchased and Sold
- Weighted Average Cost per Unit Sold to Customers

		Distribution of Electricity 2019-20
10.17	Estimated Energy Sold	9,043
10.19	Distribution Margin	18,978
10.20	Distribution Margin per Unit Sold = (10.19 / 10.17)	2.10

FORM - 9
Peshawar Electric Supply Company
Average Rate per Unit Purchased and Sold
- Weighted Average Cost per Unit Sold to Customers

		Distribution of Electricity 2020-21
10.17	Estimated Energy Sold	9,450
10.19	Distribution Margin	22,012
10.20	Distribution Margin per Unit Sold = (10.19 / 10.17)	2.33

FORM - 9
Peshawar Electric Supply Company
Average Rate per Unit Purchased and Sold
- Weighted Average Cost per Unit Sold to Customers

		Distribution of Electricity 2021-22
10.17	Estimated Energy Sold	9,875
10.19	Distribution Margin	24,569
10.20	Distribution Margin per Unit Sold = (10.19 / 10.17)	2.49

FORM - 9
Peshawar Electric Supply Company
Average Rate per Unit Purchased and Sold
- Weighted Average Cost per Unit Sold to Customers

		Distribution of Electricity 2022-23
10.17	Estimated Energy Sold	10,320
10.19	Distribution Margin	27,623
10.20	Distribution Margin per Unit Sold = (10.19 / 10.17)	2.68

FORM - 9
Peshawar Electric Supply Company
Average Rate per Unit Purchased and Sold
- Weighted Average Cost per Unit Sold to Customers

		Distribution of Electricity 2023-24
10.17	Estimated Energy Sold	10,784
10.19	Distribution Margin	31,056
10.20	Distribution Margin per Unit Sold = (10.19 / 10.17)	2.88

FORM - 9
Peshawar Electric Supply Company
Average Rate per Unit Purchased and Sold
- Weighted Average Cost per Unit Sold to Customers

		Distribution of Electricity 2024-25
10.17	Estimated Energy Sold	11,269
10.19	Distribution Margin	34,075
10.20	Distribution Margin per Unit Sold = (10.19 / 10.17)	3.02

FORM - 17

Peshawar Electric Supply Company

Distribution Margin Comparison

	Projected	Projected	Projected	Projected	Projected
	2020-21	**2021-22**	**2022-23**	**2023-24**	**2024-25**
O&M Expenses	16,667	18,301	20,246	22,857	25,597
Increase in %	**22%**	**10%**	**11%**	**13%**	**12%**
Depreciation	3,000	3,416	3,812	4,154	4,373
RORB	4,957	5,725	6,725	7,521	7,929
Income Tax	-				
Other Income	(2,611)	(2,872)	(3,159)	(3,475)	(3,823)
Distribution Margin	**22,013**	**24,571**	**27,623**	**31,056**	**34,076**
Energy Sold	9,450	9,875	10,320	10,784	11,269
DM per unit	**2.33**	**2.49**	**2.68**	**2.88**	**3.02**
DM per unit increase %	**11%**	**7%**	**8%**	**8%**	**5%**

FORM - 19

Peshawar Electric Supply Company

RORB Calculation

	Description		Audited 2019-20	Projected 2020-21	Projected 2021-22	Projected 2022-23	Projected 2023-24	Projected 2024-25
A	Gross Fixed Assets in Operation - Opening Bal	[Mln Rs]	83,299	87,395	96,996	110,194	122,747	133,604
B	Addition in Fixed Assets	[Mln Rs]	4,096	9,600	13,199	12,553	10,857	6,966
C	Gross Fixed Assets in Operation - Closing Bal	[Mln Rs]	**87,395**	**96,996**	**110,194**	**122,747**	**133,604**	**140,570**
D	*Less*: Accumulated Depreciation	[Mln Rs]	32,191	35,525	39,321	43,556	48,171	53,030
E	Net Fixed Assets in Operation	[Mln Rs]	**55,204**	**61,471**	**70,874**	**79,191**	**85,433**	**87,540**
F	*Add*: Capital Work In Progress - Closing Bal	[Mln Rs]	19,756	20,369	21,211	22,013	22,706	23,150
G	Investment in Fixed Assets	[Mln Rs]	**74,960**	**81,840**	**92,085**	**101,204**	**108,138**	**110,690**
H	*Less*: Deferred Credits	[Mln Rs]	32,776	35,894	36,244	37,479	38,145	39,708
I	Regulatory Assets Base	[Mln Rs]	**42,184**	**45,946**	**55,841**	**63,724**	**69,994**	**70,983**
J	Average Regulatory Assets Base	[Mln Rs]	**41,400**	**44,065**	**50,893**	**59,782**	**66,859**	**70,488**
	Rate of Return	[%age]	15.02%	14.06%	14.06%	14.06%	14.06%	14.06%
	Return on Rate Base	[Mln Rs]	**6,218**	**6,196**	**7,156**	**8,405**	**9,400**	**9,911**

FORM - 20

Peshawar Electric Supply Company

Revenue Requirement

			2020-21	2021-22	2022-23	2023-24	2024-25
			Projected	Projected	Projected	Projected	Projected
A	**Power Purchase Price**	[Mln Rs]	-	-	-	-	-
B	**DM**						
	O&M	[Mln Rs]	16,667	18,301	20,246	22,857	25,597
	Depreciation	[Mln Rs]	3,000	3,416	3,812	4,154	4,373
	RORB	[Mln Rs]	4,957	5,725	6,725	7,521	7,929
	Other Income	[Mln Rs]	(2,611)	(2,872)	(3,159)	(3,475)	(3,823)
	Impact of Disallowed Losses	[Mln Rs]	-				
	Total DM	[Mln Rs]	**22,013**	**24,570**	**27,624**	**31,057**	**34,076**
C	**Wheeling Charges Income (TESCO)**	[Mln Rs]					
D	**Revenue Requirement (A+B+C)**	[Mln Rs]	**22,013**	**24,570**	**27,624**	**31,057**	**34,076**
E	Financial Charges	[Mln Rs]	-	-	-	-	-
F	Less/ (Excess) Recovery PYA/Turn ov	[Mln Rs]	-	-	-	-	-
G	**Total Revenue Requirement (D+E+F**	[Mln Rs]	**22,013**	**24,571**	**27,623**	**31,056**	**34,076**

FORM - 20 (A)

Revenue Requirement *(per unit sold)*

			2020-21	2021-22	2022-23	2023-24	2024-25
			Projected	Projected	Projected	Projected	Projected
			9,450	9,875	10,320	10,784	11,269
A	**Power Purchase Price**	[Rs/ kWh]	-	-	-	-	-
B	**DM**						
	O&M	[Rs/ kWh]	1.76	1.85	1.96	2.12	2.27
	Depreciation	[Rs/ kWh]	0.32	0.35	0.37	0.39	0.39
	RORB	[Rs/ kWh]	0.52	0.58	0.65	0.70	0.70
	Other Income	[Rs/ kWh]	(0.28)	(0.29)	(0.31)	(0.32)	(0.34)
	Impact of Disallowed Losses	[Rs/ kWh]					
	Total DM	[Rs/ kWh]	**2.33**	**2.49**	**2.68**	**2.88**	**3.02**
C	**Wheeling Charges**						
D	**Revenue Requirement (A+B+C)**	[Rs/ kWh]	**2.33**	**2.49**	**2.68**	**2.88**	**3.02**
E	Financial Charges	[Rs/ kWh]	-	-	-	-	-
F	Less/ (Excess) Recovery PYA/Turn ov	[Rs/ kWh]	-	-	-	-	-
G	**Total Revenue Requirement (D+E+F**	[Rs/ kWh]	**2.33**	**2.49**	**2.68**	**2.88**	**3.02**

Peshawar Electric Supply Company

Investment

		2020-21 Projected	2021-22 Projected	2022-23 Projected	2023-24 Projected	2024-25 Projected
A Investment Plan						
DOP	[Mln Rs]	1,500	1,569	1,574	1,599	1,657
ELR	[Mln Rs]	1,636	2,359	2,429	2,514	2,574
STG	[Mln Rs]	4,000	3,000	2,500	2,000	2,050
Electrification work at different valleys of district Chitral	[Mln Rs]	150	717	311	216	165
132KV Grid system & upgrdation of 33KV Grid System in District Chitral	[Mln Rs]	160	150			
ABC Cable for Peshawar, Khyber & Bannu Circle	[Mln Rs]	350	786	916	872	
Evacuation of Power from 220/132KV Grid Station Swabi	[Mln Rs]	150	300	289		
Supply of Power to Special Economic Zone Hattar	[Mln Rs]	300	737			
Supply of Power to Special Economic Zone Rashakai	[Mln Rs]	947	879			
Establishment of 132 KV Grid Station Matta	[Mln Rs]		771			
STG Projects under PSDP special finances (proposed)	[Mln Rs]		2,000	4,500	3,452	
Deposit Works		1,020	773	835	897	965
Total	[Mln Rs]	10,213	14,041	13,354	11,550	7,411
B Financing Arrangement						
Local	[Mln Rs]					
Loan / PSDP	[Mln Rs]	2,057	6,340	6,016	4,540	165
Own Resources	[Mln Rs]	5,936	5,673	5,244	4,834	4,955
Grant	[Mln Rs]					
Consumer Contribution	[Mln Rs]	2,220	2,028	2,094	2,176	2,291
Others (Please Mention)	[Mln Rs]					
Total	[Mln Rs]	10,213	14,041	13,354	11,550	7,411

FORM - 22

Peshawar Electric Supply Company

Interest on Development Loans

Rs. Million

Sr. No.	Loans	Interest Rate %	FY 2020-21 Annual	FY 2021-22 Annual	FY 2022-23 Annual	FY 2023-24 Annual	FY 2024-25 Annual
1	Power Distribution Enhancement Project ADB Loan 2438-PAK	17%	180	189	215	237	261
2	ERRA ADB LOAN No. 2213 PAK (In US Dollar)	1%	230	242	213	175	198
3	Power Distribution Enhancement Project ADB Loan 2727-PAK	15%	185	194	221	244	268
4	Power Distribution Enhancement Project ADB Loan 2972-PAK	15%	410	431	456	479	477
5	Power Distribution Enhancement Project ADB Loan 3096-PAK	15%	425	446	472	489	452
	Total		**1,430**	**1,502**	**1,577**	**1,624**	**1,656**

FORM - 23

Peshawar Electric Supply Company

DEVOLPOMENT LOAN FOR FY 2020-21

Rs.In Million

Sr. No.	Loan	Interest Rate	2020-21				
			O/Bal	Disbursement	Interest Paid	Repayment /Exchange Risk Adjustment	C/Bal
1	Power Distribution Enhancement Project ADB Loan 2438-PAK	17.00%	848	-	180	-	848
2	ERRA ADB LOAN No. 2213 PAK	1.00%	1,362	-	120	110	1,252
3	Power Distribution Enhancement Project ADB Loan2727-PAK	15.00%	955	-	185	-	955
4	Power Distribution Enhancement Project ADB Loan-PAK 2972	15.00%	1,976	-	410	-	1,976
5	Power Distribution Enhancement Project ADB Loan -PAK 3096	15.00%	1,668	-	425	-	1,668
6	Loan from GoP		125				- 125
			6,935	-	1,320	110	6,824

DEVOLPOMENT LOAN FOR FY 2021-22

Rs.In Million

Sr. No.	Loan	Interest Rate	2020-21				
			O/Bal	Disbursement	Interest Paid	Repayment /Exchange Risk Adjustment	C/Bal
1	Power Distribution Enhancement Project ADB Loan 2438-PAK	17.00%	848	-	189		848
2	ERRA ADB LOAN No. 2213 PAK	1.00%	1,252	-	126	116	1,136
3	Power Distribution Enhancement Project ADB Loan2727-PAK	15.00%	955	-	194		955
4	Power Distribution Enhancement Project ADB Loan-PAK 2972	15.00%	1,976	-	431		1,976
5	Power Distribution Enhancement Project ADB Loan -PAK 3096	15.00%	1,668	-	446		1,668
6	Loan from GoP		- 125				- 125
			6,824	-	1,386	116	6,708
					1501.5		

DEVOLPOMENT LOAN FOR FY 2022-23

Rs.In Million

Sr. No.	Loan	Interest Rate	2022-23				
			O/Bal	Disbursement	Interest Paid	Repayment /Exchange Risk Adjustment	C/Bal
1	Power Distribution Enhancement Project ADB Loan 2438-PAK	17.00%	848	-	215		848
2	ERRA ADB LOAN No. 2213 PAK	1.00%	1,136	-	94	119	1,017
3	Power Distribution Enhancement Project ADB Loan2727-PAK	15.00%	955	-	221		955
4	Power Distribution Enhancement Project ADB Loan-PAK 2972	15.00%	1,976	-	456		1,976
5	Power Distribution Enhancement Project ADB Loan -PAK 3096	15.00%	1,668	-	472		1,668
6	Loan from GoP		- 125				- 125
			6,708	-	1,458	119	6,589

DEVOLPOMENT LOAN FOR FY 2023-24

Rs.In Million

Sr. No.	Loan	Interest Rate	2023-24				
			O/Bal	Disbursement	Interest Paid	Repayment /Exchange Risk Adjustment	C/Bal
1	Power Distribution Enhancement Project ADB Loan 2438-PAK	17.00%	848	-	237		848
2	ERRA ADB LOAN No. 2213 PAK	1.00%	1,017	-	103	72	945
3	Power Distribution Enhancement Project ADB Loan2727-PAK	15.00%	955	-	244		955
4	Power Distribution Enhancement Project ADB Loan-PAK 2972	15.00%	1,976	-	479		1,976
5	Power Distribution Enhancement Project ADB Loan -PAK 3096	15.00%	1,668	-	489		1,668
			-				-
6	Loan from GoP		125				125
			6,589	-	1,552	72	6,517

DEVOLPOMENT LOAN FOR FY 2024-25

Rs.In Million

Sr. No.	Loan	Interest Rate	2024-25				
			O/Bal	Disbursement	Interest Paid	Repayment /Exchange Risk Adjustment	C/Bal
1	Power Distribution Enhancement Project ADB Loan 2438-PAK	17.00%	848	-	261		848
2	ERRA ADB LOAN No. 2213 PAK	1.00%	945	-	113	85	860
3	Power Distribution Enhancement Project ADB Loan2727-PAK	15.00%	955	-	268		955
4	Power Distribution Enhancement Project ADB Loan-PAK 2972	15.00%	1,976	-	477		1,976
5	Power Distribution Enhancement Project ADB Loan -PAK 3096	15.00%	1,668	-	452		1,668
			-		-		-
6	Loan from GoP		125		-		125
			6,517	-	1,571	85	6,432

DISTRIBUTION COMPANY INTEGRATED INVESTMENT PLAN (DIIP)-PESCO

This Business Plan /- DIIP entails Goals and Objectives and Initiatives that will help PESCO achieve them and has been prepared with extensive cross-functional discussions, coordination and teamwork.

Contents

Section -I .....
Executive Summary .....
Section -II .....
The Company's - Baseline .....
Section -III i
Forecasts for Next Five Years i
Section -IV i
Next Five Years Goals and Objectives i
Section -V i
Projects and Programs i
Section -VI ii
Costs and Financing Plan ii
Section - VII ii
Benefits and Financial Analysis ii
Section - VIII ii
Section - IX ii
Investment Plan Implementation ii
Section - X iii
Implementation, Monitoring Plan and Reporting iii
Section - XI iii
Environmental and Social Assessment iii
Section -I 1
Executive Summary 1
Section -II 3
The Company's– Baseline 3
Section -III 18
Forecasts for Next Five Years 18
Section -IV 21
Next Five Years Goals and Objectives 21
Section -V 28
Projects and Programs – Scope 28
Section -VI 66
Costs and Financing Plan 66
Section - VII 82

Benefits and Financial Analysis 82
Section - VIII 84
Financial Projections 84
Investment Plan Implementation 87
Section - X 88
Implementation, Monitoring Plan and Reporting 88
Section - XI 96
Environmental and Social Assessment and Mitigation Plans 96

Section -I
Executive Summary

i. Introduction
ii. Purpose and Goal of Investment Plan
iii. Major Planning Situation
iv. Company's Investment Plan

Section -II
The Company's - Baseline

i. **General Information**
   - History
   - Geographic Coverage, Company's Structure, Human Resources and Corporate Governance
   - Statistical & Financial Information, including Purchases and Sales of Electricity, staff to customer's index, losses by network, outages etc.
   - Existing Project Design and Implementation System of DISCO
   - Existing Operation System of DISCO
   - Approving Investments, Investments made in last five years, source of financing and works executed
   - Financial Position
     - Overall Financial Performance (Profit/Loss)
     - Ratios analysis
     - Subsidies
     - Repair and maintenance expenses for the last five years

ii. **Power Demand and Supply**
   - Daily Load Demand
   - Seasonal Load Profile

iii. Secondary Transmission and Distribution Network Condition
iv. Financial Management, Budgeting Process, revenue recognition ...
v. HR Management
vi. IT-MIS
vii. Commercial Management
viii. **Internal Control**
   - Expenditure (Admin & Financial) Approval
   - Investment Approval
   - Internal Audit

ix. Legal and Contractual Framework
x. Governance and Description of the relationships among the Governments
xi. **Presentation and Analysis of the main issues facing the Company**
   - Financial Issues
   - Investments Needs
   - Other Issues

Section -III
Forecasts for Next Five Years

i. Consumer Growth by Category
ii. Energy and Demand Forecasts
iii. Generation Forecast and Power Acquisition Program
iv. Anticipated Load Shedding
v. Other Changes Including Technological Advances
vi. Analysis

Section -IV
Next Five Years Goals and Objectives

i. Goals and Objectives Matrix
ii. Rationale for Setting Goals and Objectives and the Planning Criteria for Proposed Investments

Section -V
Projects and Programs

A. Plan for Expansion and Rehabilitation of Secondary Transmission System

- Expansion and Rehabilitation (two scenarios Best and optimally Achievable)
- Load Flow Studies for Best Case and optimally Achievable Cases
- Short Circuit Studies for Best Case and Optimally Achievable Cases

B. Plan for Expansion and Rehabilitation of Distribution System

- Expansion and Rehabilitation (two scenarios Best and Optimally Achievable)
- Status of Study Based Distribution System Planning Based on GIS Mapping and the Rollout Plans

C. Other Functional Improvement Plans:

i. Commercial Improvement Plan
ii. Financial Management Improvement Plan
iii. Human Resource Improvement Plan, including **Staffing Plan aligned with the Investment Plan**
iv. Communications Improvement Plan

Section -VI
Costs and Financing Plan

A. **Capital Expenditure and Additional Operating Costs for Expansion and Rehabilitation of Secondary Transmission and Distribution System (for Best and Optimally Implementable Scenarios):**
   - Summary of Annual Capital Expenditure Costs
   - Summary of Annual Recurring Costs
   - Details Costing

B. **Capital Expenditure and Additional Operating Costs for Other Functional Improvement Plans:**
   - Summary of Annual Capital Expenditure Costs
   - Summary of Annual Recurring Costs
   - Details

C. **Summary Costs for the Integrated Investment Plan (Transmission, Distribution and other Functional Plans)**
   - Summary of Cost for Best Case
   - Summary of Cost for Optimally Implementable Case
   - Summary of Annual Recurring Costs

D. **Financing Plan**

Section - VII
Benefits and Financial Analysis

A. **Expansion and Rehabilitation of Secondary Transmission and Distribution System:**
   i. Tangible Benefits
   ii. Non-tangible Benefits

Section - VIII
Financial Projections

Section - IX
Investment Plan Implementation
   i. Business Planning Organization for Preparation of Investment Plans

Section - X
Implementation, Monitoring Plan and Reporting
i. Implementation Schedules
ii. Monitoring of Outcomes, Physical and Financial Progress

Section - XI
Environmental and Social Assessment

Section -I
Executive Summary

i. Introduction

Peshawar Electric Supply Company (PESCO), incorporated as a Public Limited Company on 23rd April 1998, is responsible for the delivery of electricity to over 3.74 million consumers of all civil districts of Khyber Pukhtunkhwa (KPK), Pakistan as set out in PESCO's Distribution License no. 07/DL/2002, granted by NEPRA under the NEPRA Act on April 04, 2002, as a result of the restructuring of WAPDA's Power Wing, PESCO assumed its official operations and is since then being headed by a Chief Executive Officer (CEO). PESCO pays a power purchase price (in Rs/kWh) for the electricity it procures from the Central Power Purchasing Agency (CPPA) or from other sources on behalf of the CPPA which would include the generation and transmission charges regulated by NEPRA. The major objectives of the company include ensuring uninterrupted and stable power supply to all its customers along with state of the art customer care as well as establishing and operating reliable electricity distribution networks.

Currently, PESCO has 13,210 active employees, employed in eight directorates and is responsible for distributing electricity to approximately 3.74 million consumers. The consumer mix comprises approximately 87.8 % domestic consumers (3.2 million) including residential consumers in both urban and rural areas, 9.8% commercial consumers (0.369 million) including business consumers such as markets, plazas, and offices in both urban and rural areas, 0.72% industrial consumers (0.02 million) consisting of large and small industrial loads,0.02% bulk consumers (850) consisting primarily of large societal consumers like housing societies, 0.6% agricultural consumers (0.023 million) including tube wells in rural areas, and 1.1% other consumers (43821).

ii. Purpose and Goal of Investment Plan

The Integrated Investment Plan[1]entails PESCO's vision, mission, core values, stakeholders' needs, general indicators, sales and consumer forecasts, power supply issues with limitations, human resources and organizational development, financial projections, regulatory requirements including quality of service, subsidies and legal restrictions affecting timely collection of delinquent payments, performance indices with initiatives and risk assessment and will serve as a central reference document for integrated cross-functional planning that will help PESCO make informed decisions based on priorities.

The goal of the Investment Plan/Business Plan is to create a document which will be used by the CEO and senior managers of PESCO to focus its activities and energies for the next five years in making PESCO a financially viable company by improving the regulation and governance of the entity, introducing new technologies including upgrade of existing technology and machinery and improving human resources in line with best practices worldwide. This plan will also be utilized by the Strategic Planning Committee to the Board for regular monitoring, to ensure that company achieves its stated objectives.

[1] The term Investment Plan or Business Plan will be used interchangeably throughout this document, as NEPRA names the Business Plan as the Investment Plan

This Investment Plan covers a five year period from 2020-21 to 2024-25, encompassing the following areas:

- Defining the activities and resources available to PESCO through the incorporation agreements and laws relating to it
- Identifying projections of power demand, power resources and population served expected in the time period from 2020-21 to 2024-25.
- Illustrating the strategic objectives for2020-21 to 2024-25, aligned with optimally achievable scenario as defined by the regulator, which designated coordinators prepared to accomplish the strategic goals in the five year timeframe of the Investment Plan
- The best and optimally achievable scenarios to demonstrate what is required and what can be achieved keeping in view the resources constraints and realities on ground
- Projecting the financial impact on PESCO's bottom-line of implementing the project plans

iii. Major Planning Situation

The following challenges faced by PESCO require integrated cross functional planning:

- Technical challenges and technological advances that require PESCO to upgrade the network, including metering to receive and measure continuous and reliable flow of power
- Operational challenges to maintain continuous flow of reliable power to the customers and meet their expectations in demand dominated, load-shedding driven regime
- Institutional challenges faced while developing the capacity of PESCO
- Smooth power evacuation, especially related to variable renewable being integrated in the network
- Compliance with applicable laws and regulations
- Social responsibility to conserve energy and social up-lift

iv. Company's Investment Plan

The five year Investment Plan (2020-21 to 2024-25) is intended to be used by PESCO managers and the Strategic Planning Committee of the Board of Directors as a reference guide to the upgradation and operations of PESCO, taking into consideration the activities projected to occur in the next five years. Although the Investment Plan is based on a five year window, it will be a living document and will be updated to reflect changes in requirements.

As per regulatory requirement specified in DIIP formats, two scenarios have been worked out, Best Case Scenario (if implemented, the company will achieve NEPRA standards in five years, comes with a higher cost) and Optimally Achievable Scenario (based on what company can fund, procure and implement realistically, comes with less cost, but compromise on the performance). The Multi Year Tariff (MYT) of PESCO will be based on the Achievable Scenario, and the Best Case is prepared to demonstrate the overall needs of the DISCO to meet the benchmarks specified by NEPRA in five years.

Abstract of the business plan based on the two scenarios is presented hereunder:

Under this five year plan PESCO will expand and rehabilitate is Transmission and Distribution (T&D) systems. Moreover, plans have been prepared to improve the financial, commercial, human resource and communications functions, including IT that supports the main T&D business. From new grid stations to AMRs for commercial improvements, initiatives have been planned to improve the overall performance of the company in an integrated manner. For details on scope please refer Section-V of this plan.

Costs Summary:

- Total Cost Best Case: Rs. 128881 million (Including deposit and other cost)
- Total Cost Optimally Achievable Case: Rs. 56568 million (Including deposit and other cost)

Benefits Summary:

- Best Case: Savings of 2203 MKWh of energy through loss reduction and smooth dispersal of power from new generation.
- Optimally Achievable Case: Savings of 1270 MKWh of energy through loss reduction and smooth dispersal of power from new generation.

Loss Reduction and Collections Targets:

PESCO will reduce the losses from 37.9% in 2020-21 to 33.6 % by 2024-25. PESCO has attained the collection efficiency of 88 % that will be improved up to 94.1% during the control period.

Section -II
The Company's– Baseline

i. General Information

- **History**

Peshawar Electric Supply Company, PESCO, is a Public Limited Utility Company, responsible for the distribution of electric power to the population of KPK. PESCO was incorporated in Pakistan under the Companies Ordinance 1984, on 23rd April 1998, in line with Government policy of unbundling and corporatizing Pakistan's power sector, as a result of restructuring of WAPDA's Power Wing after the enforcement of NEPRA Regulation of Generation, Transmission and Distribution of Electric Power Act (XL of 1997). PESCO's Distribution License No. 07/DL/2002 was issued by NEPRA on April 04, 2002 for the sale of power.

- **Geographic Coverage**

The network facilities of Peshawar Area Electricity Board (PAEB) of WAPDA were transferred to PESCO after its incorporation. PESCO's service area comprises of all the civil districts of KPK, spanning a total service area of 74,521 sq.km and 3749294 consumers.

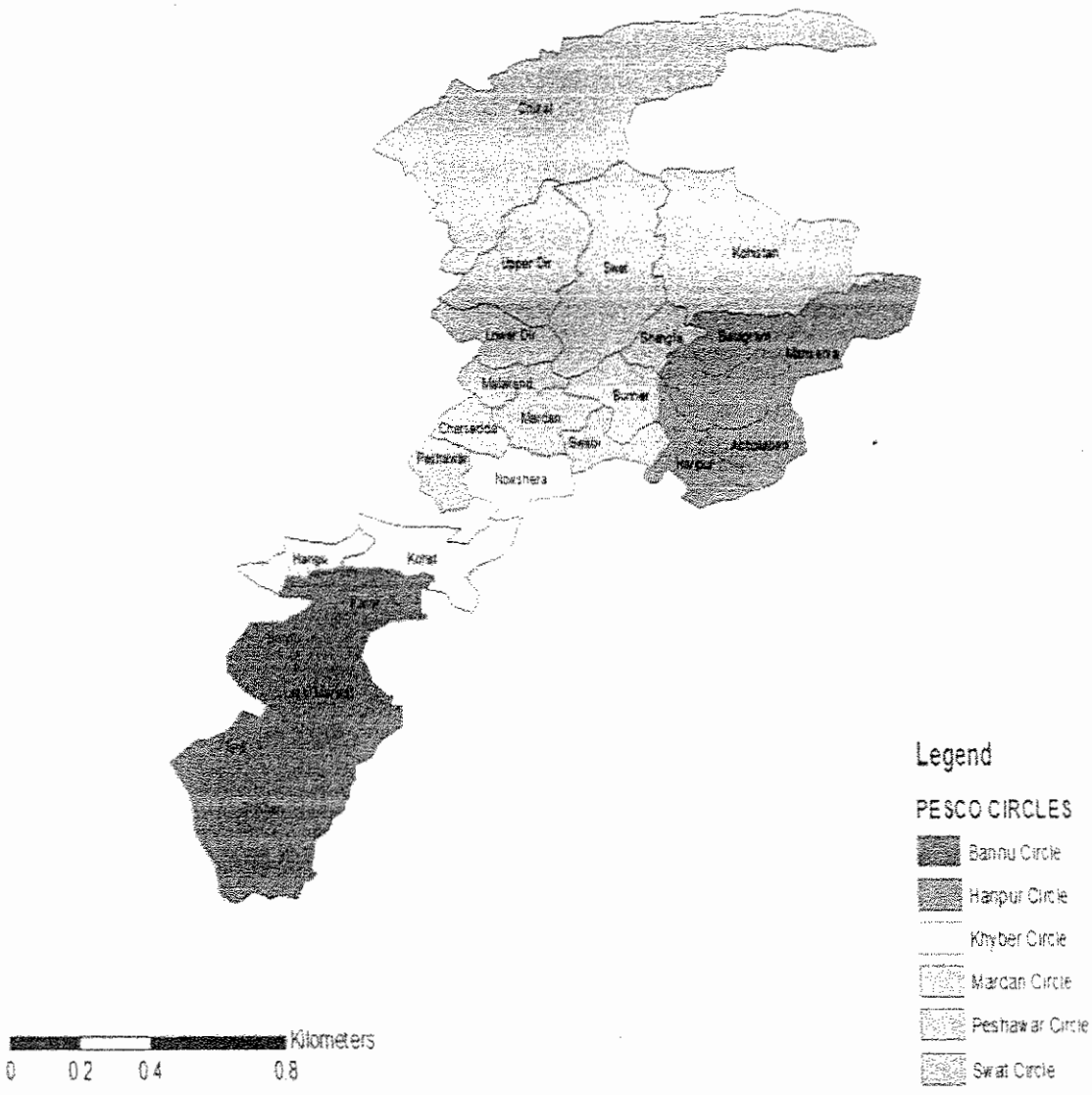

- **Company's Structure, Human Resources and Corporate Governance**

The following organogram explains the management hierarchy of PESCO.

Its Board of Directors is responsible for overall policy making, decision making and guiding the authority. The day-to-day affairs of the company are run by its eight Executive Directors who are responsible for their respective functions, under the overall control of the Chief Executive Officer.

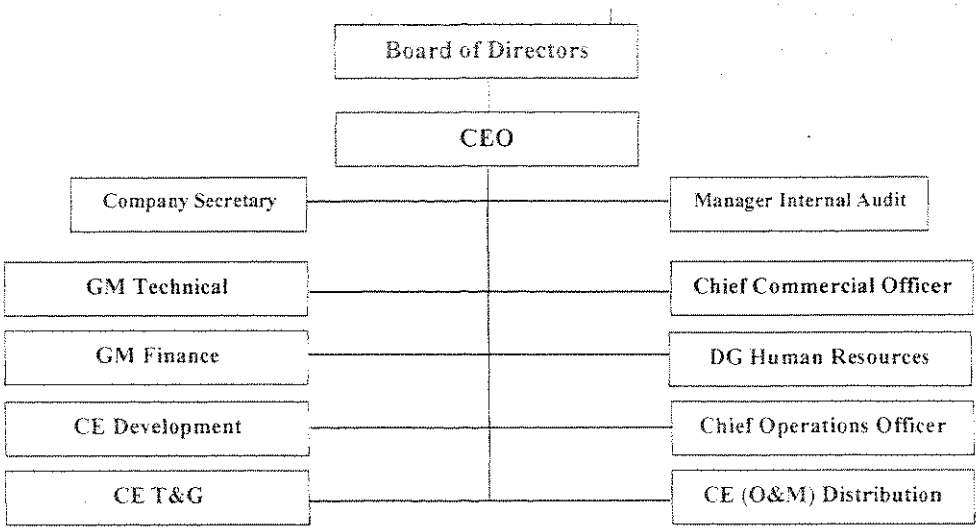

- **Statistical & Financial Information**, including Purchases and Sales of Electricity, losses, and revenue billing and collection depicting the company's financial health is tabulated below:

Description	Units	2016-17	2017-18	2018-19	2019-20
Units Received	MkWh	12511	14220	14427	14792
Units Sold	MkWh	8432	8796	9074	9043
T & D Losses.	%	32.60	38.1	37.11	38.9
Revenue Billed	M.Rs.	98674	109271	135418	160484
Revenue Collected	M.Rs.	87902	97852	120003	140798
O & M Cost	**M.Rs.**	**15369**	**16875**	**20469**	**20918**
Repair & Maintenance	M.Rs.	736	647	729	788
Salaries/Pensions	M.Rs.	13621	15253	18546	18837
Travelling Expenses	M.Rs.	222	227	231	234
Vehicle Expenses	M.Rs.	127	133	160	169
Other Expenses	M.Rs.	664	615	803	890

- **General level of Investments:** PESCO has made the following investments excluding consumer contribution in different projects:

(Mln Rs.)

Description	2016-17	2017-18	2018-19	2019-20
Development of Power	991	2931	2099	673
Energy Loss Reduction	919	964	768	1033
STG	1435	1459	1286	1219
Total	**3346**	**5354**	**4153**	**2925**

- **Existing Project Design and Implementation System of DISCO**

The project design and implementation system of PESCO is based on the resource allocation (the anticipated amount of material required and obtained for the execution of the project), resource leveling (the required amount of resources to be provided at a proper time e.g, at the start of a phase, more work force and less material may be required as compared to the growth or maturity stage) and resource scheduling/loading (the amount of resources required during the specified phase of the project.

PESCO has the required capability, personnel and expertise to implement and execute a project. It has well established, functioning departments that are capable of handling projects of similar nature and magnitude. Some of these departments are as under:

- Engineering
- Material Management
- Finance
- Commercial

Project implementation is summarized in the form of a flow chart as below:

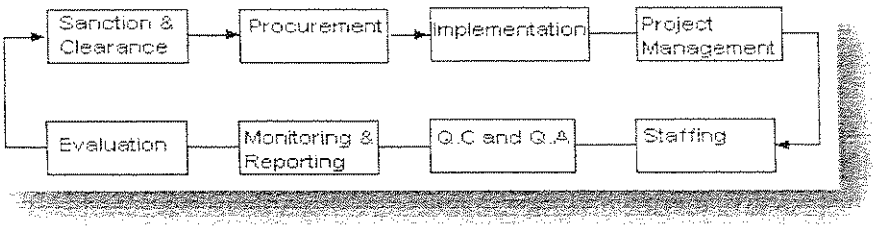

Further, to align its planning department with current and future needs of the business, PESCO is restructuring its overall planning function.

- **Existing Operation System of DISCO**

The existing administrative layout of PESCO operation system is given below:

Description	Circles	Divisions	Subdivisions	R.O Office
Distribution	8	39	187	39

Each Distribution division has one revenue /customer service office. The distribution circles, divisions, customer services offices and subdivisions deal with all types of customers of the company. The Grid System Operation (GSO) circle, divisions and subdivisions take care of and maintain the power supply through 132kV and 66kV systems comprising of the transmission lines and grid stations while the Grid System Construction (GSC) executes 66kV and 132kV grid station and transmission lines works. The Metering and Testing (M&T) section takes care of the installation, maintenance and testing of energy meters of all types. The Construction Section undertakes the implementation and

execution of investment programs of 11kV and LT (0.4 kV), System Augmentation Program (ELR and DOP), deposit works and village electrification.

ii. Power Demand and Supply

- **Daily Load Demand**
  Below is the graphical representation of load fed below and computed demand, the difference is the load-shedding:

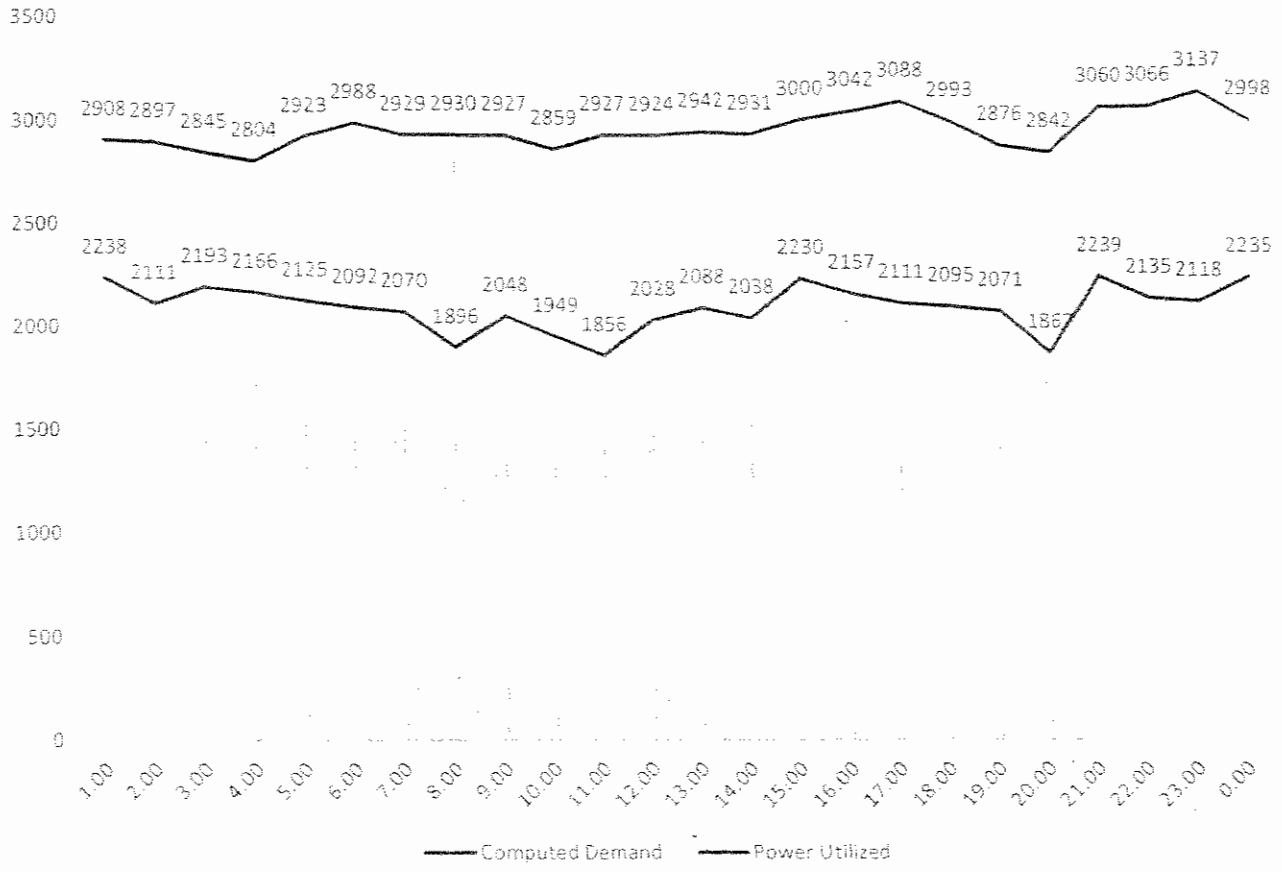

- **Seasonal Load Profile**
  Below is the graphical representation of load fed below and computed demand, the difference is the load-shedding:

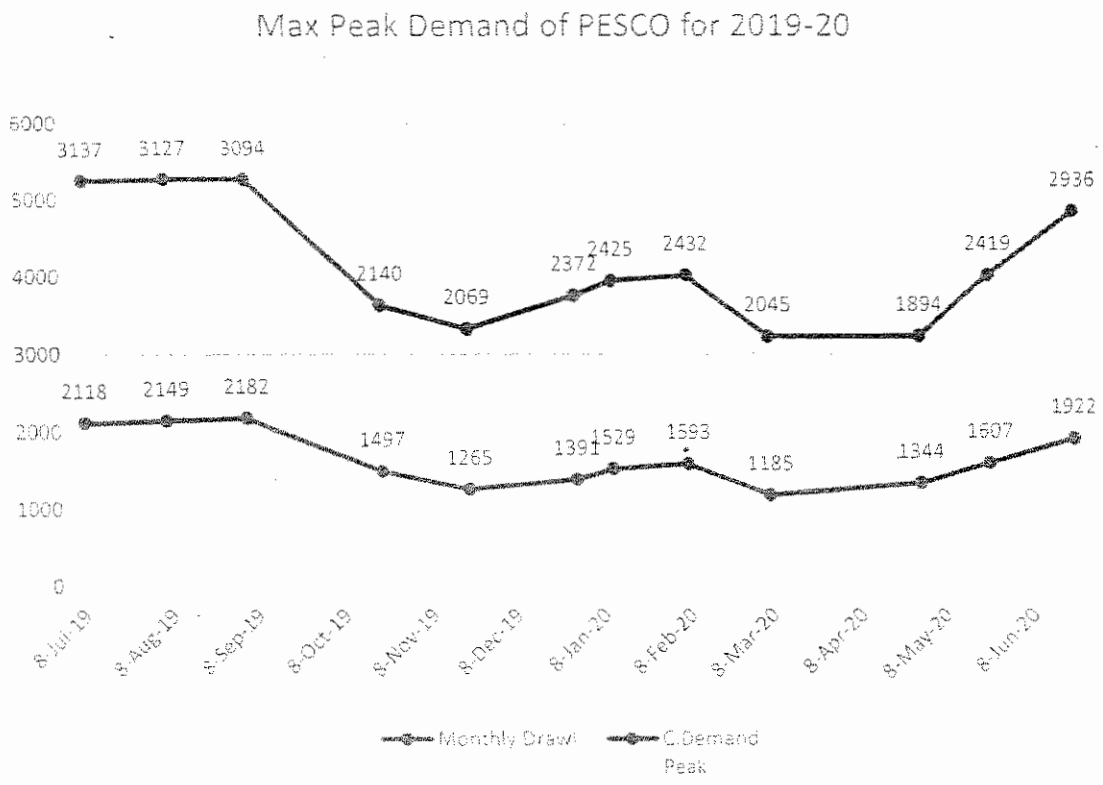

iii. Secondary Transmission and Distribution Network Condition:

PESCO has a 82 grid stations of 132 kv, 11 grid stations of 66 kv and 2 grid stations of 33 kv, thus making a total of 95 grid stations. PESCO serves 3.74 million customers through 1116 number of distribution feeders with a total length of 37220 km of HT Lines and 45311 km of LT Lines. The total number of distribution transformer in PESCO is 78759.

Main equipment status (power transformers, transmission lines, distribution lines and distribution transformers) is provided above.

iv. Financial Management:

The accounting systems and the corresponding back-office operations of PESCO are legacy based which are not only unable to meet the growing needs of the company but also incapable of providing timely information required for senior management to make effective decisions or properly monitor and control utility operations. The ERP is being implemented; however all the current processes are manually run. PESCO's cost/revenue centers are dispersed geographically, adding to the delay in reporting. The number and type of financial transactions are complex and diverse, and the data required managing these transactions quite voluminous.

The system of inventory / material management requires significant manual effort and does not provide real time valuation and status of the inventory. The inventory of PESCO, despite

of real time updating, is updated periodically for its valuation, thus, weakening the overall internal control system which in turn does not provide timely information for the project costing or project management. The inventory at warehouse is maintained manually on Microsoft Excel without any use of inventory coding.

Lack of automation in financial system and its manual integration with billing system results in working capital difficulties for PESCO and delay follow up with banks for cash-in-transit by respective customer service offices.

The PESCO requirement for Operating and Maintenance expenses for the Financial Year 2019-20 was Rs. 20,918 million. The brief head-wise detail is provided in the table below:

S. No.	Expense Head	O&M Expense Requirement (Rs. Million)
1	Salaries and Benefits	18837
2	Repair and Maintenance	788
3	Travelling Expenses	234
4	Vehicle Expenses	169
5	Other Expenses	890
	Total	20918

v. HR Management

PESCO Existing Strength

Sr. No.	Particulars	Sanctioned	Working	Vacant
1	Engineers	289	289	
2	Others	111	93	18
Grand Total		400	382	18

Grade 16 & Below

Sr#	Posts	BPS	Strength	Working	Vacant
1	A/C Officer	16	34	27	7
2	Asstt: Secretary	16	1	--	1
3	Asstt:Pvt:Secretary	16	35	23	12
4	Audit Officer	16	30	24	6
5	Computer Operator	16	61	25	36
6	Computor Teacher	16	1	1	--
7	D A O	16	98	61	37
8	Land Acq:Collector	16	1	--	1
9	Office Superintendent	16	81	40	41

10	Section Supervisor	16	39	15	24
11	Store Sys: Sup:	16	14	3	11
12	Supervisor (DC)	16	56	28	28
13	Supervisor (DE)	16	31	37	-6
14	T.G.Teacher	16	13	13	--
15	Tehsildar	16	9	2	7
16	Account Assistant	15	257	113	144
17	Assistant / H.C.	15	616	204	412
18	Audit Assistant	15	89	54	35
19	Care Taker	15	2	--	2
20	Commercial Asstt:	15	774	351	423
21	Commercial Supdt:	15	40	27	13
22	Data Coder	15	65	64	1
23	Data Entry Operator	15	54	48	6
24	DM-A	15	11	--	11
25	Foreman	15	29	13	16
26	L.S-I	15	852	351	501
27	LFM-I	15	30	13	17
28	Librarian	15	1	--	1
29	LS-I(Instructor)	15	8	4	4
30	P.T.I	15	1	1	--
31	Security Inspector	15	13	5	8
32	Sr.Store Keeper	15	22	12	10
33	SSO-I	15	146	80	66
34	Test Inspector	15	21	15	6
35	A.F.M	14	46	36	10
36	Assistant BCS	14	34	--	34
37	Assistant DCS	14	34	--	34
38	Cashier	14	34	--	34
39	DM-B	14	57	30	27
40	Junior Store Keeper	14	29	21	8
41	L.S-II	14	808	443	365
42	Lab Assistant	14	36	9	27
43	LFM-II	14	35	9	26
44	MRS-I	14	74	17	57
45	P.S.I / A.P.P.	14	1	--	1
46	PC Operator	14	71	--	71
47	SSO-II	14	183	179	4
48	Steno Grade-II	14	130	5	125

49	Stock Verifier	14	3	--	3
50	Sub Engineer	14	17	13	4
51	Test Asstt:	14	23	21	2
52	Transport Supervisor	14	1	1	--
53	A.D.M	13	16	23	-7
54	Cable Jointer	13	3	--	3
55	Electrician-I	11	1	1	--
56	Fitter Line Man	11	4	1	3
57	Fitter-I	11	28	23	5
58	L.M.I	11	2,328	1,403	925
59	MRS-II	11	117	80	37
60	Senior Clerk	11	301	139	162
61	Store Clerk	11	31	6	25
62	Work Supervisor	11	8	--	8
63	Winder	10	--	4	-4
64	Electrician-II	9	7	5	2
65	Fitter-II	9	75	10	65
66	J.Clerk W/S:	9	659	314	345
67	J/Clerk Coml:	9	117	43	74
68	Jr.Clerk A/C	9	14	8	6
69	Khatib/Imam	9	4	1	3
70	L.M-II	9	2,408	1,708	700
71	Meter Mechanic	9	30	9	21
72	Meter Reader	9	2,628	1,671	957
73	SSA	9	111	102	9
74	Surveyor	9	13	10	3
75	Tracer	9	109	6	103
76	Security Sergeant	8	133	83	50
77	ALM	7	7,162	2,252	4,910
78	ASSA	7	385	289	96
79	Auditor	7	117	10	107
80	Bill Distributor	7	1,336	322	1,014
81	Driver	7	728	419	309
82	Electrician	7	8	2	6
83	Gate Clerk	7	2	--	2
84	Helper	7	2	2	--
85	Helper(P&I)	7	10	6	4
86	Legal Clerk	7	34	--	34
87	Machine Attendant	7	20	3	17

88	Moulder	7	4	--	4
89	P/Fitter	7	4	--	4
90	Qanoongo	7	1	--	1
91	Security Guard	6	1,309	586	723
92	Blacksmith	5	21	2	19
93	Carpenter	5	5	2	3
94	Helper Pipe Fitter	5	2	--	2
95	Khadim/ Mozain	5	2	2	--
96	Mechanic	5	--	1	-1
97	Meter Helper	5	45	11	34
98	Naib Court	5	1	1	--
99	Patwari	5	6	--	6
100	Plumber	5	2	--	2
101	T.W.O	5	27	12	15
102	Timekeeper	5	1	--	1
103	Turner	5	6	1	5
104	Welder	5	16	5	11
105	Work Mistri	5	8	--	8
106	Daftari	4	43	7	36
107	H/Fitter	4	18	--	18
108	H/Molder	4	4	1	3
109	H/Turner	4	3	--	3
110	MATE	4	2	--	2
111	PPC Operator	4	4	2	2
112	Aya	3	1	--	1
113	Cleaner	3	112	40	72
114	Hammer Man	3	10	1	9
115	Helper Welder	3	4	--	4
116	R/Lifter	3	--	1	-1
117	Store Helper	3	109	25	84
118	Badraga	2	1	--	1
119	Barkandaz	2	3	--	3
120	Bearer	2	13	10	3
121	Beldar	2	2	--	2
122	Cook	2	8	2	6
123	Khalasi	2	30	3	27
124	Khasadar	2	37	4	33
125	Labour	2	7	3	4
126	Marter Mat	2	4	--	4

127	Painter	2	1	1	--
128	R/House Helper	2	1	--	1
129	Store Coolly	2	18	4	14
130	Chowkidar	1	320	124	196
131	Ehalmed	1	7	--	7
132	Library Attendant	1	1	--	1
133	Mali	1	220	101	119
134	Masson	1	2	--	2
135	Naib Qasid	1	863	407	456
136	Sweeper	1	460	87	373
	Total		**27,868**	**12,839**	**15,029**

PESCO regularly conducts training and capacity building of its employees largely through self-owned training facilities (CTCs and RTCs) and WAPDA Staff College. The trainings that are mandated by WAPDA for the Officers are conducted at the Staff College while the local training centers organize around fifteen to twenty regular training programs each year for PESCO employees. An average of 5,000 numbers of staff trained under various functional and skill based training programs each year. In the year 2015-16, a total of 5,003 (30% of total strength) employees were trained at the RTC and WAPDA Staff College. Meanwhile, the budgeted amount spend on these trainings was nearly Rs. 5 million.

PESCO has a total of five training facilities including one RTC and four CTCs to deliver trainings to the employees. Recently, PESCO has upgraded the RTC and four CTCs of PESCO.

vi. IT-MIS

IT which is the backbone of the business has significantly improved but still required further scaling.

The table below depicts the IT infrastructure being developed by PESCO by getting assistance from PDP:

Projects	Server	Desktop	Laptop	UPS	Printer	Scanner	LAN	WAN	Other Hardware	Software
ERP/ CIS	8	413	39	415	133	32	778 nodes	46 links	-	Oracle covering Finance, HR and MM modules for ERP & Customer Care and Billing software for CIS
HHU	-	43	-	43	43	-	-	-	479 HHUs+ 60 RF enabled HHUs	HHU Software
CSC	2	4	-	6	-	-	-	-	-	CMS v 2.2
P&E	1	6	-	7	2	-	8 nodes	-	-	ArcGIS & SynerGEE
AMR	7	181	-	182	176	-	6 nodes	1 link[2]	13,250 AMR meters	MDC Software
LDI[3]	4	6	-	7	1	-	16 nodes	1 link[4]	-	MDC Software
IT Lab at HQ	-	16	-	16	1	-	17 nodes	-	-	-
Intranet Portal Project	3	13	3	13	1	11	24 nodes	44 links	-	-
RTC Lab	1	25	3	2	1	-	26 nodes	-	-	-
Data Center	Racks, UPS, backup systems, fire safety, HVAC, biometric based security, video surveillance, backup generator etc.									
Total Quantity	**23**	**707**	**45**	**691**	**358**	**43**	**875**	**92**	**N/A**	**-**

[2]PDC at PESCO HO is connected with WAPDA House NOC @ 2 Mbps
[3]Servers for LDI and AMR are located at WAPDA House NOC.
[4]AMI at PESCO HO is connected with WAPDA House NOC @ 2 Mbps

vii. Commercial Management

The commercial operations of PESCO were legacy based and did not offer much in terms of transparency, data accuracy, system efficiency and services to consumers. Therefore, there was a dire need to improve commercial procedures and bring them at par with best practices adopted by utilities worldwide. With the vision to improve the overall commercial operations, PESCO implemented an optimal fusion of activities that would be in order to revolutionize the business practices adopted by PESCO which took its commercial operations many steps further.

The old billing system of PESCO was characterized by manual and cumbersome processes, inadequate controls, insufficient commercial focus, limited transparency and a lack of reliable information. Therefore, CIS, which is the critical backbone of customer care and commercial operations, was implemented at selected circles of PESCO.

As far as meter reading process is considered, the orthodox practice was recording the reading and calculating the consumption on customer records (Kalamzu card), transferring this data to the meter reading list, obtaining approval for the compiled readings by operating personnel and then entering the reading and the consumption into the computer which was a time consuming process leaving little or no time to verify suspect readings. Therefore, data manipulation and transcription errors were common causing the entire process to be highly inefficient with poor internal controls. In response to this, PESCO implemented the IMR initiative under which the process of meter reading was re-engineered and the role of the MIS directorate was increased to maintain registers electronically, eliminate redundancies and ensure better monitoring methods. The HHUs were implemented in different Circles of PESCO.

PESCO has also implemented a large-scale high-end meter replacement program across its territory, with AMR (GSM/GPRS) meters for up to 12,500 high-end residential, agricultural, commercial and industrial customers having a sanctioned load of more than 20 kW to ensure improved commercial performance, increased revenue (by modernizing PESCO's meter reading) and commercial management processes by reducing losses and saving energy.

The following table illustrates the trend of units purchased from CPPA and subsequent billing to the consumers by PESCO:

(Units in GWh)

Description	2015-16	2016-17	2017-18	2018-19	2019-20
Units Received from CPPA	11627	12511	14220	14302	14792
Units Billed to Customers	7682	8432	8796	9074	9043
Units Lost	3945	4078	5425	5228	5748
Losses (%)	33.9	33	38.1	36.6	38.9

The table below gives an illustration of the billing and collection pattern of PESCO:

(Revenue in Million Rs)

Description	2015-16	2016-17	2017-18	2018-19	2019-20
Revenue Billed to Customers	98759	98674	109271	135418	160484
Revenue Collected from Customers	85980	87901	97852	120003	140798
Revenue Collection (%)	89.5	89	89.5	88.6	87.7

viii. Internal Control

- **Investment Approval**

The company has adopted WAPDA procedures and PEPCO approved book of Financial Powers for processing all types of expenditures. The above documents prescribe financial and administrative powers of various offices for different type of expenditures.

The investment program is categorized into three components: Development of Power, Rehabilitation / Energy Loss Reduction and Secondary Transmission Lines and Grid Stations and now been transformed into the Distribution Integrated Investment Plan (DIIP)/ Business Plan, which also covers other functional areas plans as well.

The Planning Department under supervision of CEO and Chief Engineer and in consultation with Operation, Finance and other Directorates prepared PC-1s for DOP, ELR, STG and RE. The PC-1s were submitted to Planning Division of GOP after approval of BOD/Authority for final approval from ECNEC and subsequently they were approved. The approved PC-1s are the basis of annual investment. Now DIIP will be utilized for getting regulatory approval first and then taking the desired course of approval, based on funding sources.

- **Internal Audit**

There are three types of audits conducted in PESCO Internal Audit, Govt. Audit and Audit by a chartered company. Each has different scope and objectives. The internal audit processes of PESCO are governed by the legacy systems which have missed the mark to adequately identify non-compliance with existing procedures such as:

- Units consumed but consumer not billed
- Damaged or slow meters
- Inaccurate meter reading
- Units billed to nonexistent consumers
- Failure to monitor accounts with payment arrangements

Under the co-sourcing arrangement, a co-sourcing partner was hired provided assistance to PESCO to implement a risk based audit approach as defined in the new

internal audit manual for a period of one year. After a year, the performance of the audit function was evaluated and it was revealed that the internal audit function has significantly improved as the desired controls were established with in the processes. The capacity and capability of the internal audit staff was also increased.

ix. **Legal and Contractual Framework**

The primary function of PESCO is to distribute electrical power to the residents and industries within its service area.

The important legal and regulatory documents, principal contracts, and laws under which PESCO must operate are:

- The Companies Ordinance 1984
- PESCO Memorandum of Association
- PESCO Articles of Association
- Distribution License 2002
- NEPRA Performance Standard 2005
- Income Tax Ordinance 2001

The Companies Ordinance of 1984 encompasses all the rules and regulations for businesses registered with Security Exchange Commission of Pakistan (SECP). The Ordinance provides legal protection to the businesses, with the SECP keeping a close check on financial and corporate entities to ensure the stakeholders' interest. According to the Ordinance, PESCO has to follow the Memorandum of Association and Articles of Association.

According to its Memorandum of Association, in April 1998, PESCO was incorporated as a Limited Liability Company with the right to acquire properties and grid stations of WAPDA with the sole purpose of carrying on and expanding the business and supplying electricity to the areas formerly supplied by the Peshawar Area Electricity Board (AEB). Similarly, the Companies Ordnance of 1984 provides a framework of rules and regulations to PESCO, known as its Articles of Association, which cause PESCO to be classified as a Public Limited business and therefore subject to the laws which apply to such corporations.

NEPRA, under the regulation of Generation, Transmission and Distribution of Electric Power Act, 1997 (hereinafter NEPRA Act), amended by the act of parliament on 27th April 2018, wherein it has been enacted as this Act shall be called the Regulation of Generation, Transmission and Distribution of Electric Power (Amendment) Act 2018, is responsible for regulating the electricity sector in Pakistan which includes determining the Revenue Requirement, tariffs and other terms and conditions for the supply of electricity by the Generation, Transmission and Distribution Companies and to recommend the same to the Federal Government for notification. For this purpose NEPRA has laid down certain guidelines and procedures under the NEPRA Tariff Standards and Procedures Rules, 1998 and subsequent amendments made in the act. This petition is been being filed in the light of updated NEPRA Act, wherein through the act of parliament the wire business has been separated from the Commercial services of a Distribution Company, the Act has also introduced Market Operator, Electric Power Trader, Electric Power Supplier and also has made amendments to the generation of electricity within the country. This Petition is being filed in compliance of Clause 23 (c) wherein the licensee for electric power trader has been

introduced and act quotes that "no person shall, unless licensed by the Authority under this Act, engage in electric power" and clause 23 (e) wherein the term Electric Power Supply Licensee has been introduced, act states that "no person shall unless license by the Authority under this Act, engage in the supply of electric power to a consumer: provided that the holder of a distribution license on the date of coming in to effect of the Regulation of Generation, Transmission and Distribution of Electric Power (Amendment Act, 2018) shall deemed to hold a license for supply of electric power under this section for a period of 5 years from the said date In April 2002, NEPRA granted a distribution license to PESCO as per section 21 of the Regulation of Generation, Transmission and Distribution of Electric Power Act, 1997. According to it, PESCO can engage in distribution services and make sales of power to consumers in the Service Territory and the Concession Territory subject to and in accordance with the terms and conditions of the license.

NEPRA also prescribes separate performance standards for generation, transmission and distribution of safe, efficient and reliable electric power to all the consumers.

Additionally, the taxation system is defined by the Income Tax Ordinance of 2001. Like all DISCOs, PESCO has to comply with this Ordinance and file the following returns:

- Annual income tax return
- Monthly sales tax return
- Statement of deductions and calculations
- Monthly withholding tax
- Quarterly advance tax

The following deductions are made by PESCO and are duly submitted to the Government of Pakistan:

- Sales tax
- Withholding tax on sales tax
- Withholding tax on goods
- Withholding tax on sales
-

Section -III
Forecasts for Next Five Years

Through Power Market Survey (PMS), PESCO prepares the forecast ten years. The forecasts for the period of FY2020 to FY2029 are tabulated in this section. Additionally, the generation plan is prepared centrally by NTDC that is also attached.

i. Consumer Growth by Category

DIIP 1 – Consumer Growth by Category

(Nos in Million)

Circle	Domestic	Commercial	Industrial	T/ Well	Others	Total
2020-21	0.3712	0.0417	0.0032	0.0026	0.0050	0.4237
2021-22	0.243	0.0274	0.0022	0.0017	0.0112	0.2864
2022-23	0.1492	0.0168	0.0013	0.0010	0.0068	0.1752
2023-24	0.1517	0.0177	0.0014	0.0011	0.0072	0.1844
2024-25	0.1581	0.0178	0.0014	0.0011	0.0072	0.1856

ii. Energy and Demand Forecasts

DIIP2 – Energy and Demand Forecasts

Category-wise Energy Sales (GWh) – Including Load Shedding

Description	FY-2020-21	FY-2021-22	FY-2022-23	FY-2023-24	FY-2024-25
Domestic	7848	7895	8228	8571	8927
Commercial	1108	1154	1200	1246	1294
Other	920	929	946	963	981
Small Industries	118	121	122	123	125
M&L Industries	9690	4326	4405	4498	4594
Tube Well	97	98	99	101	102
TOTAL	13799	14541	15019	15521	16042
Growth %	8	5.4	3.3	3.3	3.4

Category-wise Energy Sales (GWh) – Excluding Load Shedding

Description	2020-21	2021-22	2022-23	2023-24	2024-25
Domestic	5723	5866	6181	6508	6847
Commercial	808	858	902	946	993
Other	671	690	711	731	753
Small Industries	86	90	92	94	96
M&L Industries	2691	3214	3309	3415	3524
Tube Well	71	73	75	76	78
TOTAL	10062	10804	11282	11784	12305
Growth %	11.3	7.4	4.4	4.5	4.4

Category-wise Demand (MW) – Including Load Shedding

Description	2020-21	2021-22	2022-23	2023-24	2024-25
Domestic	1554	1596	1673	1753	1837
Commercial	176	188	197	207	217
Public Light	4	4	4	4	4
Small Industries	12	13	13	13	13

M&L Industries	442	519	531	546	562
Tube Well	15	15	15	16	16
TOTAL	**2129**	**2262**	**2355**	**2454**	**2558**
Growth %	**8.6**	**6.2**	**4.1**	**4.2**	**4.2**

Category-wise Demand (MW) –Excluding Load Shedding

Description	2020-21	2021-22	2022-23	2023-24	2024-25
Domestic	1119	1173	1244	1319	1399
Commercial	127	138	147	156	165
Public Light	3	3	3	3	3
Small Industries	9	9	10	10	10
M&L Industries	318	381	395	411	428
Tube Well	11	11	11	12	12
TOTAL	**1533**	**1661**	**1751**	**1847**	**1947**
Growth %	**12.5**	**8.4**	**5.4**	**5.5**	**5.4**

iii. Generation Forecast and Power Acquisition Program

Apart from aggressive generation additional plan out-side PESCO's territory, widespread variable renewable generation (Solar Power) influx in is also planned in PESCO's territory, along with coal based conventional power plants coming on bar in next five years.

iv. Other Changes Including Technological Advances

PESCO has introduced technology to improve its financial, commercial and overall business management, which need to be sustained and scaled-up. Therefore, preparing and implementing DIIP is extremely important.

v. Analysis

As depicted above, the power demand of the customers is growing rapidly, and extensive generation is being added. With overloaded transmission and distribution system, if proper plan like DIIP is not approved, implemented, monitored and closed in-time, then the customers will not get relieve and the whole generation investments can go down the drain.

Section -IV
Next Five Years Goals and Objectives

i. Goals and Objectives Mattix

The goals are long term targets and objectives are medium term targets. The objectives defined by PESCO are SMART i.e. Specific, Measurable, Attainable, Realistic and Timely. The target setting has been done keeping in view what can be **achieved optimally** in next five years. Table below (DIIP4) lists the goals and objectives for next five year for the company, are prepared by extensive discussions and coordination within PESCO and goals & objectives from initial exercise are placed at Annex-**1**

DIIP4 - Goals and Objectives Matrix

PESCO GOALS AND OBJECTIVES

Strategic Goals	Strategic Objectives	Cordinating Directorate(s)	Leading Directorate	Tareget Measurement	Measurement 2019-20	Final Year Objective 2020-21 to 2024-25					Project Manager	Supporting Plan
						2020-21	2021-22	2022-23	2023-24	2024-25		
1.0 Improve Operational Effeciency	**1.1.a** Reduce technical and comercial losses -Improved HT/LT Ratio -Improved power factor -Improved voltage profile -Reduce average length of HT feeders -AT&C based Investments -Single Phase transformers piloting to hard areas w/o LT -ABC expansion (conversion of bare LT with HT)	P&E, PD Const, PD GSC, MM, Fin, Comm, Ops, MIS	Technical	%age of KWh	Above 30%	37.9%	36.8%	35.8%	34.7%	33.6%	GM Technical, CE P&E and team	DIIP-Transmission and Distribution Plan

	Strategic Objectives	Cordinating Directorate(s)	Leading Directorate	Tareget Measurement	Measurement 2019-20	Final Year Objective 2020-21 to 2024-25					Project Manager	Supporting Plan
						2020-21	2021-22	2022-23	2023-24	2024-25		
1.0 Improve Operational Effeciency	1.1.b Reduce Comercial Losses	CSD, MIS and Ops	CSD	%age of KWh	This is progressive decreased by % of the commercial loss. Therefore, 2.5% commercial loss will be reduced	0.50%	0.50%	0.50%	0.50%	0.50%	CSD and his team	DIIP Commercial Improvement Plan(CIP)
	1.2 Improve SAIDA/SAIFI To meet specified regulatory performance standards	Ops, T&G, O&M Dist, CSD, Technical	O&M Dist	Hours/Numbers	Over Specified Limit of NEPRA					To comply with NEPRA's specified standards		
	1.3 Improve collections to 100%	CSD, Ops, MIS, O&M Dist	CSD	%age billed amount excluding subsidy	88%	91.0%	92.5%	92.9%	93.4%	94.1%		
	1.4 Eliminate fatal & non-fatal accidents	Ops, O&M Dist, MM, HR, Dev, T&G	Operations	No of acidents	in double figures per year	Substational Reduction	Eliminate	Eliminate	Eliminate	Eliminate	DD Safety	DIIP_Lineman Safety Plan
2.0 Improve Customer Care and Service	2.1.1 "Soft area" Reduction in billing complaints to less than 1%	Ops, CSD, O&M Dist	CSD	%age of total consumers	More than 10%	Reduction	Reduction	Reduction	<1%	<1%	CSD and his team	DIIP Commercial Improvement Plan(CIP)
	2.1.2 "Hard area" Reduction in billing complaints to less than 5%	Ops, CSD, O&M Dist	CSD	%age of total consumers	More than 10%	Reduction	Reduction	Reduction	<25%	<10%		
	2.2 Minimize New Connections installation duration	Ops, O&M, Dist, CSD, MM	CSD	No of days	NERPA's guidelines not complied with			To comply with NEPRA's specified standards				
	2.3 Minimize Reconnection installation duration	Ops, O&M, Dist, CSD, MM	CSD	No of days	NERPA's guidelines not complied with			To comply with NEPRA's specified standards				
	2.4 Minimize the redressal time for supply complaints	Ops, MIS, CSD, O&M Dist	MIS	Hours	NERPA's guidelines not complied with			To comply with NEPRA's specified standards				

Strategic Goals	Strategic Objectives	Cordinating Directorate(s)	Leading Directorate	Tareget Measurement	Measurement 2019-20	Final Year Objective 2020-21 to 2024-25					Project Manager	Supporting Plan
						2020-21	2021-22	2022-23	2023-24	2024-25		
3.0 Improve PESCO's Infrastructure	3.1 Human-ware											
	3.1.1 Start Training & capacity building initiatives	HR & All	HR		Legacy training	TNA, Training plans, CPD					HRD and his team	Human Resources Improvement Plan (HRIP)
	3.1.2 Fulfill the basic requirement for needs to operate for field staff	HR, FIN, Ops, O&M Dist	HR		No comprehensive system in place	LM plan part of the overall DIIP						
	3.2 Orgaware											
	3.2.1 Org A&R review and implementation	HR & All	HR		Not fully implemented	Align org structure with business strategy					HRD and his team	Organizational Improvement Plan(OIP)
	3.2.2 Improve recruitment process	All	HR		Legacy Process	Needs Improvement						
	3.2.3 Conduct yardstick study for Human Resources	All	HR		Yardstick study is obsolete	Yardstick Study to be updated						
	3.2.4 Implement Performance based management system	PR, HR	HR		Legacy system with no implementation	1)Upgrade and implement the existing acelerated promotion policy and 2) Increments based on performance ratings of PER's						
	3.2.5 Improvement in office facilities/work environment	HR & All	HR		Limited/inadequate facilities	Needs Improvement						

Strategic Goals	Strategic Objectives	Cordinating Directorate(s)	Leading Directorate	Tareget Measurement	Measurement 2019-20	Final Year Objective 2020-21 to 2024-25					Project Manager	Supporting Plan
						2020-21	2021-22	2022-23	2023-24	2024-25		
3.0 Improve PESCO's Infrastructure	3.3 Technoware											
	3.3.1 AMI expansion	MIS, Ops, O&M Dist, CSD, P&E	CSD	% of Customers Covered with AMR	Project by PESCO is in process.	AMR/AMI at all 11 KV feeders are installed both on incoming and outgoing. AMR/AMI at consumer level upto 10 kw load will be installed in next five years.					CSD	Commercial Improvement Plan (CIP)
	3.3.2 Expand HHU and meter correction	MIS, Ops, O&M Dist, CSD, P&E	CSD	% of Customers Covered with HHUs	Project by PESCO is in process.	"Soft area" 100% is completed. "Hard area" 50% will be cover in next five years.					CSD	Commercial Improvement Plan (CIP)
	3.3.3 Replace electromechanical meters with static meters (100%)	Ops, O&M Dist, CSD, P&E	CSD	% of Customers Covered with Static Meters	Project by PESCO is in process.	100% electronic meters					CSD	Commercial Improvement Plan (CIP)
	3.3.4 P&E expansion to GIS Mapping	P&E, MIS, Ops, O&M Dist	P&E		Project by PESCO is in process.	Fully implemented in PESCO					P&E	DIIP
	3.4 Inforware											
	3.4.1 Implement ERP & its rollout	All	HR		Project by PESCO is in process.	Extension of the IT network to support ERP in all circles. (ERP Progress = 80%)					FD	Financial Management Improvement Plan (FMIP)
	3.4.2 Implement CIS & its rollout	CSD, MIS	CSD		Project by PESCO is in process.	Extended to all circles					CSD	Commercial Improvement Plan (CIP)
	3.4.3 Expand intranet portal to PESCO	All	MIS		Deployment at H/Q level	Already deployed and will be improved further in next five years.					MIS	Communication Improvement Plan (CIP)
	3.4.4 Improve communications through email	All	MIS		Paper based communication	Promote e-communication culyure					DGIT	Internal comm. Improvement Plan(ICIP)

Strategic Goals	Strategic Objectives	Cordinating Directorate(s)	Leading Directorate	Tareget Measurement	Measurement 2019-20	Final Year Objective 2020-21 to 2024-25					Project Manager	Supporting Plan
						2020-21	2021-22	2022-23	2023-24	2024-25		
4.0 Comply with applicable laws and regulation	4.1 Companies Ordinance 1984	FIN, Company Secetary	FIN		--	Study and Compliance Required					All	Create a Library, map all requirements and Make it part of Business Plan
	4.2 Code of Corporate Governance for Public Sector	FIN, Company Secetary	FIN		--							
	4.3 Income Tax Ordinance	Legal, FIN, CSD, MIS	FIN		--							
	4.4 Sales Tax Act	Legal, FIN, CSD, MIS	FIN		--							
	4.5 Electricity Act & rules	Legal, CSD	CSD		--							
	4.6 Theft Ordinance CPC	Ops, Legal	CSD		--							
	4.7 Industrial Relations	HR, Legal	HR		--							
	4.8 Other labor laws	HR, Legal	HR		--							
	4.9 PPRA Rules	Dev, P&E	P&E		--							
	4.10 Distribution Licence	Ops, T&G, P&E, Dev, CSD, FIN	FIN		--							
	4.11 NEPRA Act & Rules	All	FIN		--							
	4.12 Compliance with	Dev	Dev		--							
	4.13 Power Sale Agreement with CPPA	Legal, FIN, CSD, T&G	FIN		--							
5.0 Make PESCO a socially responsible corporate entity	5.3 Campaign for energy conservation	P&E, PR	PR	No of Campaigns	Limited Campaigns	DISCO's wide					Communication Head	Stakeholders Communication Plan

In the above table the goals for PESCO are divided into five major categories (i) Improve operational efficiency (this includes technical (transmission and distribution systems operational efficiency[5]), financial, commercial, human resource, employee safety etc. (ii) Customers Services and Care, (iii) Improve DISCOs Infrastructure (with only top priority projects under the four heads defined that need highest of attention), (iv) Comply with applicable laws and regulations and (v) The initiatives that the DISCO may take to make it more socially responsible corporate entity.

[5] NEPRA Performance Standards (Distribution) Rules, 2005 and Distribution Codes were consulted while preparing these objectives

ii. Rationale for Setting Goals and Objectives and the Planning Criteria for Proposed Investments

The goals and objectives that have been narrated under DIIP-4 were prepared after extensive discussions and coordination efforts within PESCO. These are the targets that PESCO has set and the projects / initiatives have been identified to meet these set targets. The resources requirements for the best case were far more than the capacity PESCO to fund and execute. Initiatives have been identified and prioritized under the optimally achievable scenario keeping in view, the following factors:

a. The reliable dispersal of power, especially the power that will be injected within PESCO in next five years, including the variable renewables
b. Funding availability as PESCO can arrange funding only up to Rs.56568 million as required under the achievable scenario and not Rs.128881 million as required under best case.
c. Capacity to procure and execute is another constraint that has limited PESCO's capability to implement the achievable scope, not the larger scope envisaged under best scenario developed
d. Meeting the technical parameters specified in the Grid Code, Distribution code performance standards and consumer service manual
e. Loss reduction from 37.9% in 2020-21 to 33.6% in 2024-25 , the loss improvement potential saturates as the losses are further decreased and improving/maintaining collections
f. Improving internal controls, faster information availability and quality of data through back-office automation
g. Improving the competencies of the employees and their morale, through training capacity building and incentives
h. Improving corporate brand image by improving internal and external communications
i. Safety of line-staff is a key part of DIIP, includes special focus on LM safety
j. Return on investment is also considered while planning and prioritizing the interventions
k. Other objectives (social uplift e.g. village electrification) are part of the plan as well

Section -V
Projects and Programs – Scope

A. Secondary Transmission System

This section covers scope for the expansion and rehabilitation of secondary transmission network (132 kV and or 66 kV) of PESCO.

PESCO has prepared two Scenarios and the related scope. **Scenario-1** (the Best Case), that if implemented would have completely revamped the transmission network and enabled the DISCOs to achieve the NEPRA's specified Performance Standards Distribution and provision of the Distribution Code, specially the Distribution Planning Code issued by NEPRA.

The company has also prepared a **Scenario-2** (the Optimally Achievable Case) based on its procurement, execution and especially the ability to raised funding. The Multi Year Tariff (MYT) is based on based on the Optimally Achievable Case scope and costs.

The proposed sub Transmission Lines and Grid Stations works for DISCO also includes the scope for "Deposit Work" and these works are separately identified in the formats below:

- **Load Flow Studies for Best Case and Optimally Achievable Cases**

This section covers the load flow peak-cases for five years. The assumptions and results of these studies are discussed under this section and detailed plots are referred in the Annexures. Special situation, for instance, integration with Solar Power (large induction) over a specified period in PESCO has been paid special attention in the studies.

As per NEPRA's guidelines provided in the DIIP formats, PESCO has prepared two Scenarios and the related scope. Scenario-1 (the Best Case), that if implemented will completely revamp the transmission network and enable the DISCOs to achieve the NEPRA's specified Performance Standards Distribution and provision of the Distribution Code, specially the Distribution Planning Code issued by NEPRA.

Further, the company has also prepared a Scenario-2 (the Optimally Achievable Case) based on its procurement / execution capacity and availability / capacity to raise funding for the investments. Detailed system studies for the future years (based on two scenarios as defined above) have been carried out to determine the justification of the proposed sub-projects in PESCO area under five year DIIP and to assess their impact on the system transmission network.

The other objectives of the studies are identification of any reinforcements required with the proposed sub-projects in terms of new lines, new substations transformer addition/augmentation, reactive power compensation and switchgear addition/replacement at the substations, in addition to the already planned/under execution projects in PESCO. The benefits of the proposed sub-projects to the network of PESCO have also been determined through system studies and are discussed below.

- Expansion and Rehabilitation (Optimally Achievable Case) - Scope

The table DIIP 16 captures the complete scope under Achievable Case for distribution system:

DIIP16 - Distribution System (Optimally Achievable Case)

Sr. No.	Description	Unit	Quantities					
			2020-21	2021-22	2022-23	2023-24	2024-25	Total
Scope of Work for 11 kV and Below Expansion								
A.								
1	New HT Lines							
	Number of proposals	Nos	05	10	12	12	13	52
	Length of new HT line	Km	75	149	179	179	194	776
2	Transformers							
	a. 25 KVA	Nos	40	40	45	45	50	220
	b. 50 KVA	Nos	60	65	65	65	70	325
	c. 100 KVA	Nos	100	100	105	110	110	525
	d. 200 KVA	Nos	130	130	135	140	142	677
	e. others KVA	Nos						
	Sub Total		330	335	350	360	372	1747
3	11 KV Capacitors							
	a. Fixed 450 KVAR	Nos	05	10	12	12	13	52
	b. Fixed 900 KVAR	Nos						
	c. Others	Nos						
	Sub Total		05	10	12	12	13	52
4	11 KV Panel	Nos	05	10	12	12	13	52
5	11kV 500 MCM Cable	km	2	3	4	4	3.9	16
Scope of Work for LT Expansion								
B.								
1	New LT Lines							
	Number of proposals	Nos	330	335	350	360	372	1747
	Length of new LT line (Total Wasp+ANT)	Km	198	201	210	216	223	1048
2	LT Capacitors							
	a. Different KVARs	Nos						
3	Other Equipments and Material							
	a. Single Phase Meters	Nos	100000	140000	150000	155000	160000	705000
	b. Three Phase Meters	Nos	30000	550	600	650	700	32500

	c. MDI	Nos	500	250	250	300	350	1650
	Sub Total		130500	140800	150850	155950	161050	739150
Scope of Cost Deposit Work								
C.	Village Electrification							
1	New HT Lines							
	Length of new HT line	Km	286	255	264	269	275	1349
2	New LT Lines							
	Length of new LT line	Km	320	295	305	320	345	1585
3	Transformers							
	a. 25 KVA	Nos	50	40	41	42	48	221
	b. 50 KVA	Nos	150	35	36	37	38	296
	c. 100 KVA	Nos	40	42	42	43	44	211
	d. 200 KVA	Nos	35	36	36	38	39	184
	e. others KVA	Nos						
	Sub Total		275	153	155	160	169	912
D.	Independent Feeder							
1	New HT Lines							
	Length of new HT line	Km	95	41	51	57	63	307
2	New LT Lines							
	Length of new LT line	Km						
3	Transformers							
	a. 25 KVA	Nos						
	b. 50 KVA	Nos						
	c. 100 KVA	Nos	54	12	15	18	20	119
	d. 200 KVA	Nos	30	15	18	20	22	105
	e. others KVA	Nos						
	Sub Total		84	27	33	38	42	224
4	11 KV Panel	Nos	20	10	11	14	16	71

Methodology

The distribution Voltage is 11 KV on HT and 0.4 KV on LT system. Estimation of material requirement is made on the basis of SDI. All aspects are considered while deciding the design and requirement of material e.g. requirement of new line for urban as well as for Rural area. For reconductoring of urban area's line as well as rural area are considered keeping in view the size of conductor as well. Different type of assemblies are selected which is used commonly and estimation for a specific assembly is made separately.

For economical and safety purpose, PC Poles will be utilized along with Steel structure for extension of HT/LT lines in the areas under electrification. The ratio of steel structures and PC' poles will be

maintained as 10:90. ACSR and AAC will be used for the purpose of current carrying from the Grid Station to the point of DS/utilization. 25 KVA, 50 KVA, 100 KVA, 200 KVA sizes of Distribution Transformers will be used. Span length of structures and P.C Poles has been worked out according to SDI so as to ensure adequate clearance, safety as well as avoiding obstruction in normal life.

Evaluation of Material Requirements

Scope of material requirements under the Distribution Expansion Project is calculated and detailed in the following section.

The Expansion BOQs for different DOP measures have been developed as follows:

New 11 KV Switchgear (Control Panels)

11 KV panels to be added according to the following break-up:

Panels for express feeders to be built for Shifting/bifurcation of existing feeders	52 Nos

ACSR Conductors for new express line construction

It is estimated that 52-Nos feeders will require construction of express lines for their bifurcation. On the average 15 km of 3-phase HT line will be constructed per feeder based on historical construction data. The overall share of different ACSR conductors in the total of 776 km of lines is estimated based on historical construction data and the segregate is given as below:

Km Line

Osprey	65.63% 776 x 0.6563	510 Km
Dog	33.48% 776 x 0.3348	260 Km
500 MCM	0.88% 776 x 0.0088	07 Km
		Total 776 Km

Calculation of Material for 11 KV System

(i) 11 kV Line Re-conductoring

Estimated re-conductoring per feeder based on sample studies, works out to be = 10 Km

Estimated % share of different Conductors in re-conductoring:

Osprey	50%
Dog	40%
Rabbit	10%

Number of feeders for rehabilitation 52 Nos.
Therefore, total re-conductoring length 52 x 10 520 Km
The quantities of ACSR conductors required for re-conductoring are therefore:

Km Line

Osprey	50%	520 x 0.500	260 KM
Dog	40%	520x 0.400	208 KM
Rabbit	10%	520 x 0.10	52 KM
			Total 520 KM

(ii) Capacitor Applications for Power Factor Improvement

The sample studies indicate that at an average, one capacitor bank of 450 kVAR is needed per feeder for improving the power factor to 95% from existing average power factor of 85% on the selected feeders. For 52 No. 11 kV feeders, requirement of capacitor banks of 450 kVAr each will, therefore, be 52 Nos.

(iii) Augmentation of Over-loaded Transformers

The number of transformers required for replacement against overloading is worked out as follows:

Share of Transformers required for Augmentation

25 kVA	220	Nos.
50 kVA	325	Nos.
100 kVA	525	Nos.
200 kVA	677	Nos.
Total:	**1747**	**Nos.**

(vi) New LT Lines

Each new transformer is estimated to have at least three LT circuits of (600 M). Based on this estimation, the LT line conductor is calculated as follows:

Total LT line required: $\frac{600 \times 1747}{1000}$ = 1048 Km

The final estimated conductor lengths are therefore:

New 3-φ LT line (Wasp)	262 km
New 3-φ LT line (Ant)	786 km

(vii) **LT Line Reconductoring**

The average LT line reconductoring per LT rehabilitation proposal is estimated based on historical as:

3-φ, Wasp conductor line		0.25 km
3-φ, Ant Conductor line		0.25 km
LT line reconductoring (3-φ, Wasp)	1747 x 0.25	437 km
LT line reconductoring (3-φ, Ant)	1747 x 0.25	437 km

(ix) **Energy Meters**

The requirement of energy meters for installation of new meters is estimated as per our demand for each year.

Scope of Work for 11 kV and Below Rehabilitation		unit	2020-21	2021-22	2022-23	2023-24	2024-25	Total
A.								
1	**Rehabilitation of HT Lines**							
	Number of proposals	Nos	26	42	42	44	45	199
	Bifurcation	Nos	26	42	42	44	45	199
	Reconductoring	Km	260	420	420	440	450	1990
	Re-routing	Km						
2	**New Transformers**							
	a. 25 KVA	Nos	80	120	135	140	160	635
	b. 50 KVA	Nos	150	320	355	360	350	1535
	c. 100 KVA	Nos	100	240	275	280	290	1185
	d. 200 KVA	Nos	40	80	90	80	90	380
	e. others KVA	Nos						
	Sub Total		370	760	855	860	890	3735
3	**Installation of 11 kV Panels**	Nos	26	42	42	44	45	199
4	**11kV 500 MCM Cable**	km	08	13	13	13	14	60
Scope of Work for LT Rehabilitation								
B.								
1	**LT Lines Rehabilitation**							

	New LT Line	Km	74	152	171	172	178	747
	Reconductoring of LT Line	Km	56	114	128	129	134	560
2	**Other Equipments and Material**							
	a. Single Phase Meters	Nos	8000	12000	13000	13500	14000	60500
	b. Three Phase Meters	Nos	400	600	650	650	650	2950
	Sub Total	Nos	8400	12600	13650	14150	14650	63450

Methodology for Rehabilitation

The distribution Voltage is 11 KV on HT and 0.4 KV on LT system. Estimation of material requirement is made on the basis of SDI. All aspects are considered while deciding the design and requirement of material e.g. requirement of new line for urban as well as for Rural area. For reconductoring of urban area's line as well as rural area are considered keeping in view the size of conductor as well. Different type of assemblies are selected which is used commonly and estimation for a specific assembly is made separately.

For economical and safety purpose, PC Poles will be utilized along with Steel structure for extension of HT/LT lines in the areas under electrification. The ratio of steel structures and PC' poles will be maintained as 10:90. ACSR and AAC will be used for the purpose of current carrying from the Grid Station to the point of DS/utilization. 25 KVA, 50 KVA, 100 KVA, 200 KVA sizes of Distribution Transformers will be used. Span length of structures and P.C Poles has been worked out according to SDI so as to ensure adequate clearance, safety as well as avoiding obstruction in normal life.

Evaluation of Material Requirements

Scope of material requirements under the Distribution Rehabilitation Project is calculated and detailed in the following section.

The BOQs for different ELR measures have been developed as follows:

New 11 KV Switchgear (Control Panels)

11 KV panels to be added according to the following break-up:

Panels for express feeders to be built for
Shifting/bifurcation of existing feeders 199 Nos

ACSR Conductors for new express line construction

It is estimated that 199-Nos feeders will require construction of express lines for their bifurcation. On the average 15 km of 3-phase HT line will be constructed per feeder based on historical construction data. The overall share of different ACSR conductors in the total of 2985 km of lines is estimated based on historical construction data and the segregate is given as below:

Km Line

Osprey	66.00%	2985 x 0.6600	1970 Km
Dog	33.33%	2985 x 0.3333	995 Km
500 MCM	0.66%	2985 x 0.0066	20 Km
			Total 2985 Km

Calculation of Material for 11 KV System Rehabilitation

(i) 11 kV Line Re-conductoring

Estimated re-conductoring per feeder based on sample studies, works out to be = 10 Km

Estimated % share of different Conductors in re-conductoring:

Osprey	50%
Dog	40%
Rabbit	10%

Number of feeders for rehabilitation 199 Nos.
Therefore, total re-conductoring length 199 x 10 1990 Km
The quantities of ACSR conductors required for re-conductoring are therefore:

Km Line

Osprey	50%	1990 x 0.500	995 KM
Dog	40%	1990 x 0.400	796 KM
Rabbit	10%	1990 x 0.10	199 KM
			Total 1990 KM

(ii) Capacitor Applications for Power Factor Improvement

The sample studies indicate that at an average, one capacitor bank of 450 kVAR is needed per feeder for improving the power factor to 95% from existing average power factor of 85% on the selected feeders. For 199 No. 11 kV feeders, requirement of capacitor banks of 450 kVAr each will, therefore, be 199 Nos.

(iii) Installation of New Transformers

The number of new transformers required for installation is worked out as follows:

Share of Transformers required

25 kVA	635	Nos.
50 kVA	1535	Nos.
100 kVA	1185	Nos.
200 kVA	380	Nos.
Total:	**3735**	**Nos.**

(vi) New LT Lines

Each new transformer is estimated to have at least two LT circuits of (200 M). Based on this estimation, the LT line conductor is calculated as follows:

Total LT line required: $\frac{200 \times 3735}{1000}$ = 747 Km

The final estimated conductor lengths are therefore:

New 3-φ LT line (Wasp)	374 km
New 3-φ LT line (Ant)	374 km

(vii) LT Line Reconductoring

The average LT line reconductoring per LT rehabilitation proposal is estimated based on historical as:

3-φ, Wasp conductor line		0.05 km
3-φ, Ant Conductor line		0.1 km
LT line reconductoring (3-φ, Wasp)	3735 x 0.05	187 km
LT line reconductoring (3-φ, Ant)	3735 x 0.1	374 km

(ix) Energy Meters

The requirement of energy meters for replacement of defective meters is estimated as per Historic data which is distributed year wise.

- Installation of ABC Cable (Optimally Achievable Case) - Scope

Sr. No	Circle	Division	No. of Feeders	Length of ABC Cable (Km)
1	Peshawar	City Rural	2	100.968
		Charsadda	8	534.01
		Shabqadar	6	97.865
		Rural	9	239.099
2	Bannu	Bannu-1	12	266.632
		Lakki	7	329.532
		Tank	2	81.882
		Bannu-2	8	379.954
3	Khyber	Khyber	16	449.892
TOTAL			70	2479.834

- Electrification works in Chitral (Optimally Achievable Case) – Scope

S.NO	DESCRIPTION	UM	QTY
1	H.T STRUCTURE 45' LONG	NO	105
2	H.T STRUCTURE 36' LONG	NO	6120
3	L.T. STRUCTURE 30' LONG	NO	10010
4	ACSR DOG	MTR	707586
5	ACSR RABBIT	MTR	669545
6	AAC WASP	MTR	19936
7	AAC ANT	MTR	2681280
8	25 KVA TRANSFORMER	NO	68
9	50 KVA TRANSFORMER	NO	200
10	100 KVA TRANSFORMER	NO	37
11	STEEL CROSS ARM / D-FITTING	NO	342

12	STEEL CROSS ARM WITH BRACES	NO	12450
13	PIN INSULATOR	NO	37350
14	PIN FOR STEEL CROSS ARM	NO	37350
15	DISC INSULATOR	NO	9348
16	DEAD END CLAMP FOR DOG/RABBIT	NO	9348
17	SPOOL INSULATOR (LT)	NO	42388
18	D-SHACKLE ASSEMBALY	NO	42388
19	PLATE FORM (SINGLE STRUCTURE)	NO	268
20	PLATE FORM (DOUBLE STRUCTURE)	NO	37
21	ENY NUT	NO	9348
22	EARTH UNIT WITH THIMBLE 10'	NO	16844
23	STAY ROD WITH ELBOW AND THIMBLE	NO	9701
24	GALVENISED STEEL WIRE 10 MM	KG	265380
25	DROP OUT CUT OUT	NO	915
26	PVC 19/0.83 4/CORE	MTR	4680
27	P.G CONNECTOR T-110	NO	2408
28	P.G CONNECTOR T-150	NO	9348
29	DOUBLE ARMING BOLT 5/8" x 14"	NO	24900
30	DOUBLE ARMING BOLT 5/8" x 20"	NO	1014
31	BOLT & NUT 5/8" x 2"	NO	79014
32	BOLT & NUT 5/8" x 10"	NO	6120
33	BOLT & NUT 5/8" x 14"	NO	12450
34	WASHER ROUND 1" x 7/16"	NO	97584
35	STAY STRIP / CLAMP	NO	9701
36	500 MCM S/CORE	MTR	1800
37	11 KV PANEL	MTR	6
38	IN DOOR KIT	NO	18
39	OUT DOOR KIT	NO	18

- **Status of Study Based Distribution System Planning Based on GIS Mapping and the Transition Plan**

The status as per FY2020-21 on the mapping of HT and LT network and studies based on GIS mapped network on modern planning analysis tool(s) is provided in DIIP 17. Also, the plan to map the whole HT and LT network and subsequent conversion to planning based on GIS mapping using modern state of the art tools is given in table DIIP 17.

DIIP17 - Study of Distribution System Planning Based on GIS Mapping and the Transition Plan

Sr. No.	Description	Unit	Quantities						
				2020-21	2021-22	2022-23	2023-24	2024-25	Total
GIS Mapping									
1	HT Mapping/updation								
	Number of 11 kV Feeders	Nos		200	200	200	200	200	1000
	Length of HT Lines mapped	Km		9000	6000	6200	6000	6300	33500

2	LT Mapping								
	Number of LT Lines	Nos		200	200	180	165	180	925
	Length of LT Lines mapped	Km		3000	3100	3200	3200	3300	15800
3	Tools Required								
	Development of Enterprise GIS Solution	Nos		2					2
	Plotters	Nos		8					8
	Capacity Building of PESCO staff on GIS/SynerGEE Electric			25	25	25	25	25	125

Sr. No.	Description	Unit	Quantities						
				2020-21	2021-22	2022-23	2023-24	2024-25	Total
Study Based Planning using GIS Maps with Modern Planning Tools - Transition Plan									
1	Tools Required								
	Simulation Software Licenses	Nos		3		3	3	3	12

In order to carry out GIS field survey and its updating, tools like GPS sets, computers, printers and SynerGEE licenses will be required. In addition PESCO Planning & Engineering need a comprehensive Enterprise GIS Solution that enables centralized, enterprise –level geodatabase management and server-based publication of maps and geographic information services throughout the enterprise and on the Internet as web services.

C. Other Functional Improvement Plans:

i. Commercial Improvement Plan

This plan covers the commercial improvement activities including but not limited to metering (including AMRs), Hand Held Units based meter reading, improvement in billing systems, anti-theft initiatives, consumers database update, customers services improvement initiatives etc. The scope that what will be done in each of the five year under best case is provided here. The narrative shall is supported by justification.

DIIP18 - Commercial Improvement Plan

Commercial Improvement Plan Items (Illustrations below)		FY-2020-21	FY-2021-22	FY-2022-23	FY-2023-24	FY-2024-25	Total
		Total	Total	Total	Total	Total	Total
A	AMR Metering	72	360	420	300	300	1452
B	SMS Data collection	1.2					1.2
C	Consumer Census	0.232	0.255	0.28	0.309	0.339	1.415
D	Data Center	33	19.2	21.1	29.1	1.79	104.19
E	Email Hosting	0.84	0.924	1.016	1.118	1.229	5.127
F	Billing SMS	4.8	5.28	5.808	6.388	7.027	29.303

G	HHUs for meter reading	30	30	30	30	30	150
F	Licenses and support	142.3	103.1	114.2	130.1	125.5	615.2
Total		284.37	518.75	592.40	497.01	465.88	2358.44

The Integrated Commercial Improvement Plan (ICIP) broadly aims to demonstrate commercial loss reduction, improvement in revenues and improvement in customer services through process automation, transparency, accountability, and improved productivity in order to create a foundation for sustainable commercial operations. Additional goals and objectives include:

Please refer table DIIP-4 for complete mapping of ICIP with goals and objectives. Here are the highlights related to commercial interventions:

- Improving PESCO's operational efficiency through:
  - Reduced commercial losses by 2.5% progressively over the period of five years

- Improving customer care and services:
  - Reducing complaints related to billings to less than 0.1%
  - Minimizing new connections installation duration to comply with NEPRA's requirements
  - Minimizing reconnection installation duration to comply with NEPRA's requirements
  - Maximizing the time between date of receipt of bill and due date (10 days)

- Improving PESCO's infrastructure:
  - Implementing CIS and its rollout to overcome billing errors and ensure more controls over billing through modern technology

Other related objectives:

- Streamlined procedure without compromising system of internal controls
- Re-direction of documents on an efficient path to reduce revenue cycle and process cycle time
- Faster complaint resolution and timely availability of accurate information for better decision making
- Increased accuracy of billing through reduction of human interface in commercial processes
- Increased efficiency, easy access and administration through an online complaint system

Problem Statement (Baseline-Defined)

The current commercial operations of DISCOs are legacy based and do not offer much in terms of transparency, data accuracy, system efficiency and services to consumers. Therefore, there is a dire need to improve commercial procedures and bring them at par or close to best practices adopted by utilities worldwide. The commercial cycle starts with meter readings (which is manual), billing (which is being done through a legacy billing system), collections and customers services, which also needs considerable improvements.

Response

As a result of comprehensive planning exercise, PESCO has identified some low cost and quick impact interventions that would transform the way PESCO operate commercially and would bring a paradigm shift in its commercial operations. The ICIP is an optimal fusion of all the activities that would be implemented through the course of five years to revolutionize the business practices adopted by PESCO and take its commercial operations further.

To improve the efficiency and accuracy of the consumer billing process, CIS will be scaled-up. The updated consumer's database from the consumer census will be utilized to populate the CIS database i.e. through IMR. In addition, the data on electricity consumption, whether received from AMR meters or HHUs, will be processed through CIS. This will shorten the meter reading and billing cycle thus ensuring that cash flows hit the ledgers of the DISCO much sooner and with less effort. Further, in order to curb potential theft and non-recovery, a surveillance unit will also be setup across the DISCOs that will be responsible to monitor incidents of theft and guard the revenues of the company. This cell will also enforce the nonpaying consumers to pay their outstanding dues. To achieve excellence in customer services, the Customer Service Centers (CSCs) will be upgraded in each subdivision. These centers will facilitate the consumers and improve the brand image of PESCO in the eyes of the consumers. In conjunction, a Customers Management System (CMS) will be launched all across PESCO, along with a toll free number where consumers can file their complaints.

All these integrated commercial efforts will create a synergized effect of improving the commercial performance of PESCO and making it a more profitable entity. Therefore, based on the return on investment offered, these projects have been chosen.

Customers Information System (CIS)

The operations of DISCOs are characterized by manual and cumbersome processes, inadequate controls, insufficient commercial focus, limited transparency and a lack of reliable information. As a result, operations are highly inefficient with substantial revenue leakages and poor customer orientation. Integrating and automating core commercial functions like meter reading and billing/collections will minimize the human element in commercial processes and lay the foundation for sustainable revenue cycle reforms.

Integrating and automating core commercial functions like meter reading and billing/collections that will minimize the human element in commercial processes and lay the foundation for sustainable revenue cycle reforms is being planned. From customer care and metering to billing, payments, credit and collections, these applications enable the customer experience and support all aspects of billing and revenue collections. Augmented with HHU meter reading devices, the CIS will generate accurate consumer bills and a one-window customer services facility will provide improved customer experience. This will result in improved operational efficiency, increased accuracy of bills, reduced process cycle time and more efficient customer services with a reduction in customer complaints.

Therefore, CIS, which is the critical backbone of customer care and commercial operations, is being implemented at PESCO and Power Information Technology Company (PITC) at Peshawar Circle.

CIS is a web based application system. The required servers and allied hardware is being provided that has the capacity to cover the entire company's customer's base. PITC was developed the CIS application whereas Oracle license for database was purchased by PESCO. The CIS rollout comprises

of numerous elements including the application software, database engine, computer hardware and networks (LANs and WANs), network installation and testing, data conversion from legacy system to a new system, data cleansing, pre-installation and on-the-job training, and operational support for a limited time. All these activities will be done by PESCO.

ii. Financial Management Improvement Plan

PESCO is implementing ERP and the costs for ERP implementation are already covered. Further PESCO started work to improve the internal audit function and audit and accounting manuals. Under this plan PESCO envisages to conduct specialized studies like Assets tagging and valuation. Provision for covering the bandwidth operational costs is also made under this DIIP (best case) for ERP.

DIIP19 - Financial Management Improvement Plan

Financial Improvement Plan Items (Illustrations below)		FY-2020-21	FY-2021-22	FY-2022-23	FY-2023-24	FY-2024-25	Total
		Total	Total	Total	Total	Total	Total
A	ERP system implementation	261.15	224.15	225.57	230.31	235.06	1176.2
B	Revamping the Internal Audit						
C	Other studies and models preparation						
G	IT infrastructure to support new initiatives						
F	Others etc...						
Total		261.15	224.15	225.57	230.31	235.06	1176.24

iii. Human Resource Improvement Plan

This plan covers the HR improvement activities, revamping / addition of training facilities, training of employees through external facilities, conducting some studies, improving the working environment etc. Under this section scope that what will be done in each of the five year under best case is discussed. The narrative shall also be supported by the justification.

DIIP20 - Human Resource Improvement Plan

HR Improvement Plan Items (Illustrations below)		FY-2020-21	FY-2021-22	FY-2022-23	FY-2023-24	FY-2024-25	Total
		Total	Total	Total	Total	Total	Total
A	Revamping of Training Centers		28.5	33.5	26	19.5	107.5
B	Training of employees through external training institutions		39.5	39.5	39.5	39.5	158
C	Human Resource Information System Implementation		10	10	10	10	40
D	Conducting the yard stick study		5	5	5	5	20
E	IT infrastructure to support new initiatives		7	7	7	7	28
F	Improving the working environment		5	5	5	5	20
G	Others etc…						
Total			95	100	92.5	86	373.5

The Human Resource Improvement Plan (HRIP) broadly aims to increase the functional capacity of DISCO staff by providing the institutional model for technical and behavioral skills among the company's employees. It also aims to increase the productivity and quality of services provided both internally and externally, creating a foundation for sustainable HR operations. Additional goals and objectives include:

Human-ware:

- Improving PESCO's infrastructure:
  - Starting training and capacity building initiatives
  - Improving the recruitment process
  - Fulfilling the basic requirement for needs to operate for field staff
  - Improving communications with staff
  - Identifying a turnaround group

Org-ware:

- Org A&R review and implementation
- Improving office facilities/work environment
- Conducting yardstick study for HR
- Conducting motivational campaigns
- Career planning
- Improving health and educational facilities for employees

Others:

- Streamlined HR procedure and system of internal controls.
- Increased efficiency and effectiveness of the departments.
- Increased knowledge and skills of staff in their functional areas

The current operations and budgets of DISCOs lack a focus towards the improvement of human resource functions and significantly neglect the skill development of employees which often times is a major contributing factor towards the poor overall performance of the organization. Therefore, there is a dire need to improve human resource functions and bring them at par with best practices adopted by utilities worldwide. As a result of DISCOs' operational audits, which identified some interventions that would transform the way these DISCOs operate and bring a paradigm shift in their human resource functions. The HRIP is an optimal fusion of all the activities that would be implemented through the course of five years to revolutionize the business practices adopted by PESCO and ensure the development of its human capital.

The HRIP offers a holistic approach as it not only targets one of the main goals of the organization i.e. increased efficiency but also takes the employees' perspective into consideration through improved facilities/work environment. The HRIP starts with striking the heart of human resource development i.e. training and capacity building of the staff. For this purpose, PESCO will begin the process of adequately funding the proper training function by allocating training and development specific budget at two percent of the operating budget and increasing it by almost one percent per year. To be effective, the trainings must be a continuing process that steadily enhance the technical skills and reinforce safe working practices especially amongst the linemen.

- All these efforts will create a synergized effect of improving the human resource functions of the DISCO and making it a more profitable entity.

iv. Communications Improvement Plan

This plan covers the communications improvement activities including but not limited to improving the internal communication amongst employees and external communication with customers to improve image of the company etc. Under this section scope of work is provided to be done in each of the five years under best case.

DIIP 22- Communication Improvement Plan

Communications Plan Items (Illustrations below)		FY-2020-21	FY-2021-22	FY-2022-23	FY-2023-24	FY-2024-25	Total
		Total	Total	Total	Total	Total	Total
A	Improving Internal Communications with Employees		22.5	22.5	22.5	22.5	90
B	Improving External Communications with Customers		5	5	5	5	20
C	Communication material		1	1	1	1	4
D	Others etc...						
Total			28.5	28.5	28.5	28.5	114

PESCO often receive negative coverage in the local media due to the absence of active communications and media strategy. Moreover, the basic functions of communications are undermined with little or no communications budget. The public relations department lacks the resources, manpower and expertise that prevent PESCO from achieving corporate communication standards and creating a positive image among their consumers. The Communications Improvement Plan (CIP) thus, offers a holistic approach because it not only emphasizes the importance of public awareness and image building initiatives for the DISCO but also the internal communication. A part from this, it also focuses on improving the internal communication among staff specially the officer cadre who are involved in the decision making and for the purpose, require immediate access to the information, when and where required.

This plan identified some low cost interventions that would transform the way PESCO operate their PR department. Frequent consumer awareness campaigns and regular interaction with consumers are few of the highly recommended activities targeting educated and well-informed consumers who are bound to play their role in energy conservation and spread positive messages. In addition, PESCO will allocate a clearly defined budget and resources for consumer awareness activities. The CIP is an optimal fusion of all such activities that would be implemented through the course of five years by PESCO to take its communications and outreach further.

Through the initiatives indicated, the CIP aims to improve PESCO's branding with recognition among local communities and consumers and improved understanding among the young generation regarding their role in energy conservation along with improved corporate communication and increase in the usage of email and telephonic communication amongst PESCO's staff.

All these efforts will create a synergized effect of improving the communications function of the DISCO and making it a corporate entity at par with utilities worldwide. Therefore, based the maximum band for the buck, these projects have been chosen.

A. Internal Communication:

Mail Servers:

Before PESCO could take the initiative to improve communication with its external stakeholder such as consumers and the community as a whole, it must ensure that it has achieved the optimum level required in the internal communication among staff. To achieve this objective, PESCO should acquire the basis infrastructure that would help the staff to have affective communication among them. The modes of communication that are needed to be strengthened by PESCO as an organization are electronic communication via email and, telephonic communication over the cell phones.

In order to provide instant access to the information required for the spontaneous decision making and problem solving, PESCO employees in the officer cadre need to have in their possession, at least an email address to communicate within the boundaries of PESCO and a cell phone enabling them to relay their communication outside the premises of their offices. Therefore a mail server is suggested to be deployed within the organization. Scanners will also be installed to ease the email functionality. This will be done right after the communication protocols have been set, user trainings have been imparted and procedures have been finalized; all of which would happen in the first year of Business Plan implementation. In addition, cell phones will also be provided to the officers serving the dual purpose of not only making phone calls but also checking their emails.

Annual Employee Recognition Event:

It is the duty of an organization to appreciate its employees because as a matter of fact, an organization is in existence only because of its employees. Therefore, PESCO will organize an annual function to celebrate its successes and achievement in the last year as well as to recognize the employees that have given PESCO the reasons for celebration through their dedication and hard work. This will not only motivate the employees but will consequently result in creating harmony and mutual understanding among them.

These interventions will ensure that PESCO establish an effective internal communication setup required to run the organization and its operations, in a more efficient manner.

B. Public Communication & Outreach Activities:

PESCO's Public Relations (PR) Departments comprise one PR officer and two clerical staff who dedicate a good portion of their time to issuing rebuttals to inaccurate media reports. The concept of image building and consumer awareness needs improvement. Therefore this plan which actually comprises of a complete portfolio in the realm of Public Communication and Outreach, helping put forward an improved brand image of PESCO, better customer services and better informed customers through a series of outreach campaigns.

1. Mass Media Campaigns

The Public Relations and Customer Services Departments of PESCO will design localized campaigns to target consumers on both energy conservation and the timely payments of bills. These campaigns will help PESCO in its image promotion as a well-run and progressive power distribution company.

PESCO staff will be given an opportunity to talk to consumers through radio, TV and newspapers to educate consumers regarding the distribution business of PESCO.

In the long run, these campaigns will result in an improved image of PESCO as a dynamic and customer-friendly entity through external communications that will help to smoothly implement consumer awareness campaigns and will empower the PR Department to deliver assertive communications and outreach on behalf of PESCO.

2. Public Outreach & Awareness Programs

Consumer outreach activities will help build a relationship between PESCO and its consumers. Campaigns targeted at schools and universities, and industries, traders and farmers will be planned in close coordination with the relevant departments of PESCO.

A variety of interventions at schools and colleges will be held including energy conservation seminars, lectures on PESCO's role as a DISCO, debating, essay writing and painting competitions. These will help in the image promotion of PESCO among school- / college-going students. A range of consumer awareness material will be disseminated to improve the knowledge of students on energy conservation and efficiency at both homes and schools.

Industries are important consumers of PESCO therefore targeting industrialists, through seminars at the Chamber of Commerce, will spread energy conservation awareness and the effectiveness of energy audits. Speakers from PESCO will be arranged to speak with industrialists on selected topics e.g. energy conservation, better relationships between PESCO and industries and the need for strengthening cooperation to the mutual benefit of both.
Similarly meetings will be organized with Press Club, to gain its support to spread the message to the masses to adopt energy conservation measures and place PESCO's conservation material in prominent locations.

Farmers, in addition to being important consumers of PESCO, can play a significant role in the conservation of energy through the use of efficient tubewells and legally managing their connections. Improved relationships between farmers and PESCO are the key to discouraging theft and soliciting timely bill payments.

3. Design and printing of Customer Awareness Material

PESCO's corporate image requires steps to be taken for its improvement and to promotion as a DISCO rather than an electricity generation and supply control entity. A localized media campaign will be designed and executed to create awareness among consumers regarding PESCO and energy conservation. Material will include news articles, brochures and leaflets, billboards, pamphlets, local cable advertisements and documentaries. A new corporate tagline (slogan) along with business cards will help introduce a uniform public face of the company at the professional level and will be proposed to PESCO management.

As part of the overall branding campaign, PESCO's Customer Services Centers will be branded through the strategic placement of standees, banners and other awareness material. Brochures, leaflets and handbooks will be developed for employee safety measures and workplace ethics that will help

guide Customer Service Center employees. The proposed action plan includes designing content that educates consumers about PESCO's role as a DISCO and the different energy conservation measures they can adopt.

4. Student Energy Conservation Programs

Another important intervention is the energy efficiency and anti-theft campaigns consisting of mass media and Informational and Educational Communication (IEC) materials for dissemination to the public as well as internal communications. These are grassroots-level promotions that target awareness at community level or through schoolchildren and college/university students with action-oriented messages, where benefits of proposed actions are quantitative and clear to the audience. For instance, replacing an incandescent light bulb with an energy saver will help reduce consumption by 50%, resulting in money saving and increased availability of electricity.

5. Radio Talk shows

Talk shows aired through radio are one of the cost effective ways to directly reach the consumers and to tame their minds by talking about the positive developments being carried out by PESCO and showing the positive side of the picture. These talk shows also provide an opportunity to the consumers to take part in the ongoing discussions with the senior officials of PESCO, turn attention to their complaints, or provide their feedback.

6. Monthly News Letter

Any progressive organization would like to update the society in general and its employees and consumers in particular, in a progressive manner, about the achievement it is making throughout the course of time. Newsletter is an effective matter to get this done. PESCO will publish monthly newsletter that will not only contain the updates about the organization but will also include news, events, articles, consumer feedback and other topics of interest.

Rather than presenting the scope in a table it is narrated and explained below:

A. Internal Communications

For enhancing email internal communication via email, the company will deploy physical IT infrastructure consisting of one Mail Server and associated paraphernalia. In addition, scanners will be provided in all the distinguished offices of PESCO to facilitate email communication. Further, to facilitate swift communication amongst the officers, smart phones will be designated for all the officers enabling them not only to make calls but also to check and respond to the emails on the go.

Apart from investments in the communications technology, PESCO will invest in the human aspect as well by arranging at least one Employee Recognition Event each year. It will be a formal event attended by all the employees of PESCO in which the high-achievers will be acknowledged for their services and successes.

B. External Communications

Public Outreach Office of PESCO will be strengthened by provision of a Toyota Hiace for rapid outdoor mobility of staff for performing outreach activities in the field.

At least four mass media campaigns in a year will be arranged within the territory of PESCO, two campaigns will be based on the theme of anti-theft while two will focus energy conservation. These will include publishing advertisement in leading local newspapers, and relaying the message using the electronic media: TV, Cable and FM Radio. In addition, billboards, pole streamers and similar mediums will also be utilized to spread the message among the consumers.

Apart from these campaigns, public outreach programs and awareness sessions will be arranged at university, community and district levels. It is anticipated that at least four sessions per year at each level will be organized to reciprocate the message.

Printed material is an effective way to penetrate within the masses therefore, consumer awareness material will be designed and printed which includes but not limited to brochures, pamphlets, leaflets, flyers etc. In addition, a newsletters will be also published each month.

v. Linemen Training, Tools and Equipment

PESCO has provided quality tools, vehicles and equipment, and also conducted different trainings of line staff on the latest tools and equipment that are used worldwide to make line work effective and prevent lineman from fatal and severe non-fatal accidents. A hundred purpose-built vehicles have been provided making the line staff able to carry all necessary tools and equipment that are mandatory to perform their job safely.

PESCO's senior and middle managers are also trained so that they can realize the importance of lineman safety in quality work production and elimination of these accidents. The point of consensus has developed in the PESCO due to safety trainings at all levels of management and line staff is "all these accidents are avoidable and can be eliminated". To reach such point, unwavering commitment is required at every level of DISCO to show zero tolerance attitudes on any accident in future. The management can't justify its position by initiating disciplinary actions against SDOs and Supervisors only, but the management has to have allocated good amount of resources in lineman safety.

Currently PESCO have serious dearth in Transport, Tools and Personal Protective Equipment for Linemen. Further PESCO operate its safety through Deputy Manager Safety with two safety inspectors, in one research it is concluded that in a well-run power utility its safety personnel ratio to its employees should be 1/250, whereas PESCO has such ratio 1/4000. To improve such ratio PESCO Safety Organization needs restructuring immediately.

In this business plan PESCO has incorporated such needs in lineman safety with extensive homework and calculations. In this plan, all the needs of Safety Organization restructuring, Trainings and Safety Professional Development Programs for management and line staff, provision of Bucket Mounted Trucks for transport and Ravis for supply complaints handling, communication (mobile phones provision for all LM), Linemen equipment and PPEs have been catered with to make PESCO lineman safe, effective and efficient (that includes miscellaneous gang-tools, individual tools, personal protective equipment are planned to be procured). This plans also includes provision for customized trainings for PESCO's LM.

This plan under safety when executed well save PESCO from huge losses due to poor quality of work and rampant accidents of experienced lineman caused in the shape of heavy financial losses and human loss and it will also improve response to complaint time resulted in improved customer services. Please refer below for details of Tools and Planting scope for achievable case.

Sr. No.	Description	Unit	Quantities					
			2020-21	2021-22	2022-23	2023-24	2024-25	Total
1	Vehicles		83	20	10	10	10	133
	Sub Total		**83**	**20**	**10**	**10**	**10**	**133**
2	Tools & Plants (T&P)							
	a. Instrument and Test Equipment	Nos						
	b. Special Tools	Nos						
	c. Mechanical Plants (generators, welding plants etc.)	Nos						
	d. LM Tools other than personal protective equipment	Nos						
	e. Clip on Volt-Ohm Meter	Nos	32	55	40	32	20	159
	f. Clip on Power Analyzer	Nos	15	40	21	9	5	85
	g. AC Recording Watt/Var Meter	Nos	11	35	15	7	2	68
	h. Personal Computers with Printers	Nos	11	20	11	13	8	55
	Sub Total		**69**	**150**	**87**	**61**	**35**	**367**

Section -VI
Costs and Financing Plan

A. Capital Expenditure and additional Operating Costs for Expansion and Rehabilitation (this section also includes the total cost of DIIP)

- Details of Costing
  The detailed costs of Transmission, Distribution and functional plans is provided hereunder, with more details Annexed.
- STG-Expansion and Rehabilitation (Best Case)
  a. Grid Stations

DIIP 25 - STG Expansion and Rehabilitation (Best Case): Grid Stations

Rs. In Million

Sr. No	Description	Total Cost	Total Capacity Added (MVA)	2020-21	2021-22	2022-23	2023-24	2024-25
1	New							
a	132 KV	13390	2416	1167	2731	3956	3915	1621
2	Conversion							
a	66 to 132 KV	1217	260	260		422	270	265

b	33 to 132 KV	132	26	132				
3	**Augmentation**							
a	132 KV	3732	517	1070	1132	90	840	600
b	66 KV	82	13	50	32			
4	**Extension (Transformer)**							
a	132 KV	2217	648	876	606	255		480
b	66 KV	0.00	0					
5	**Rehabilitation**							
a	132 KV	710			710			
	Total	21480	3880	3555	5211	4723	5025	2966

b. Transmission Lines (Best Case)

i. New Line

DIIP 26 - STG Expansion and Rehabilitation (Best Case): Transmission Lines (Best Case): New Lines

Rs. In Million

Sr. No.	Description	Total Cost	2020-21	2021-22	2022-23	2023-24	2024-25
1	T/Line D/C	7101.45	1876.0	2490.6	1498.8	389.0	847.00
2	T/Line SDT	4338.00	417.00	1078.0	1581.0	761.0	501.00

ii. Rehabilitation/Reconductoring/Up-gradation (Best Case)

DIIP 27 - STG Expansion and Rehabilitation (Best Case): Transmission Lines (Best Case): Rehabilitation/Reconductoring, Up-gradation

Rs. In Million

Sr. No.	Description	Total Cost	2020-21	2021-22	2022-23	2023-24	2024-25
1	132 KV D/C	0.00					
2	132 KV SDT	0.00					
3.	132 KV Addl: Ckt	949.00			821	128.0	

iii. Reconductoring and Rerouting (Best Case)

DIIP 28 - STG Expansion and Rehabilitation (Best Case): Transmission Lines (Best Case): Reconductoring and Rerouting

Rs. In Million

Sr. No.	Description	Total Cost	2019-20	2020-21	2021-22	2022-23	2023-24
1	132 KV D/C	293.00		173	120		
2	132 KV SDT	2961		295	2066		600
	Total Cost	15642.45	2293.00	3568.6	5265.8	1150	1948.0

iv. Capacitor

DIIP 29 - STG Expansion and Rehabilitation (Best Case): Transmission Lines (Best Case): Capacitor

Nil

- Expansion and Rehabilitation (Optimally Achievable Case)

a. Grid Stations

DIIP 30 - Expansion and Rehabilitation (Optimally Achievable Case): Grid Stations

Rs. In Million

Sr. No	Description	Total Cost	Total Capacity (MVA)	2020-21	2021-22	2022-23	2023-24	2024-25
1	New							
a	132 KV	10982.00	2022	1167.0	2425.0	4114	1964	1312
2	Conversion							
a	66 to 132 KV	952.00	208	260.00		422.0	270.0	
b	33 to 132 KV	0.00	0					
3	Augmentation							
A	132 KV	2418.00	335	1070.0	1018	90.00	240.0	
B	66 KV	82.00	13	50.00	32.00			
4	Extension (Transformer)							
A	132 KV	1822.98	488	965.98	602.0	255.0		
B	66 KV	0.00	0					
5	Rehabilitation							
A	132 KV	360.00			360.00			
B	66 KV							
	Total	16616.98	3066.00	3512.9	4437	4881	2474	1312

b. T/Lines (Optimally Achievable Case)

i. New Line

DIIP 31- Expansion and Rehabilitation (Optimally Achievable Case): Transmission Lines (Optimally Achievable Case): New Line

Rs. In Million

Sr. No.	Description	Total Cost	2020-21	2021-22	2022-23	2023-24	2024-25
1	T/Line D/C	6232.85	1877	2272	1196	714.0	174.0
2	T/Line SDT	2782.86	167.0	910.0	390.0	751.8	564.0

ii. Rehabilitation/Reconductoring/Up-gradation

DIIP 32 - Expansion and Rehabilitation (Optimally Achievable Case): Transmission Lines (Optimally Achievable Case): Rehabilitation/Reconductoring/Up-gradation

Rs. In Million

Sr. No.	Description	Total Cost	2020-21	2021-22	2022-23	2023-24	2024-25
1	132 KV D/C	0.00					
2	132 KV SDT	0.00					
3	132 KV Addl: Ckt	0.00					

iii. Reconductoring and Rerouting

DIIP 33 - Expansion and Rehabilitation (Optimally Achievable Case): Transmission Lines (Optimally Achievable Case): Reconductoring and Rerouting

Rs. In Million

Sr. No.	Description	Total Cost	2020-21	2021-22	2022-23	2023-24	2024-25
1	132 KV D/C	1426.10		218	441.1	767	
2	132 KV SDT	1125.1			380.1	745	
	Total Cost	11566.91	2044	3400	2408	2978	738

iv. Capacitor

DIIP 34- Expansion and Rehabilitation (Optimally Achievable Case): Transmission Lines (Optimally Achievable Case): Capacitor

Nil

- Distribution System-Expansion and Rehabilitation (Best Case)

DIIP35 - Distribution System Expansion and Rehabilitation (Best Case)

Sr. No.	Description	Rs. In Million					
		2020-21	2021-22	2022-23	2023-24	2024-25	Total
Cost of Work for 11 kV and Below Expansion							
A.							
1	Expansion of HT Lines						
	New Line	675	742	787	720	832	3755
	Reconductoring	291	320	339	310	359	1618
2	Transformers						
	a. 25 KVA	348.9	393.8	433.2	452.9	492.3	2121.2
	b. 50 KVA	269.1	361.2	412.8	516.0	629.6	2188.8
	c. 100 KVA	50.9	67.9	84.9	101.9	132.4	438.0
	d. 200 KVA	16.2	27.0	32.4	43.2	58.9	177.6
	e. others KVA						
	Sub Total	685.2	850.0	963.3	1114.0	1313.2	4925.7
3	11 KV Capacitors						
	a. Fixed 450 KVAR	5	5	5	5	6	26
	b. Fixed 900 KVAR						
	c. Others						
	Sub Total	5	5	5	5	6	26
4	11 KV Panels	39	43	46	42	48	218
5	11 kV 500 MCM Cable	24	27	29	26	30	136
Cost of Work for LT Expansion							
B.							
1	New LT Lines						
	Number of proposals	2995	3650	4110	4680	5439	20874
	New LT line	1487.730	1813.094	2041.593	2324.734	2701.758	10368.908
2	LT Capacitors						
	a. Different KVARs						
3	Other Equipments and Material						
	a. Single Phase Meters	324.000	216.000	129.600	140.400	142.560	952.560
	b. Three Phase Meters	371.470	264.020	165.780	162.710	159.640	1123.620
	c. MDI	35.055	16.500	18.000	19.500	22.500	111.555
	Sub Total	730.525	496.520	313.380	322.610	324.700	2187.735
Cost of Cost Deposit Work							
C.	Village Electrification						
1	New HT Lines						
	New HT line	263.1	315.6	350.8	385.4	437.8	1752.8

2	New LT Lines						
	New LT line	1017.5	1220.6	1356.9	1492.3	1695.5	6782.8
3	Transformers						
	a. 25 KVA	80.0	96.0	106.6	117.3	133.3	533.2
	b. 50 KVA	320.0	383.9	426.5	469.2	533.2	2132.7
	c. 100 KVA	152.4	182.9	203.2	223.5	254.1	1016.2
	d. 200 KVA	23.1	27.7	30.8	33.9	38.5	153.9
	e. others KVA						
	Sub Total	575.5	690.4	767.1	843.9	959.1	3836.0
D.	Independent Feeder						
1	New HT Lines						
	New HT line	38.7	50.3	77.4	96.8	109.7	372.9
2	New LT Lines						
	New LT line	Nil	Nil	Nil	Nil	Nil	Nil
3	Transformers						
	a. 25 KVA						
	b. 50 KVA						
	c. 100 KVA	11.0	13.4	11.0	90.0	87.3	212.7
	d. 200 KVA	5.8	7.1	5.8	47.7	46.3	112.8
	e. others KVA						
	Sub Total	16.8	20.6	16.8	137.7	133.5	325.5
4	11 KV Panel	13.1	15.7	30.1	34.0	35.3	128.2

Cost of Work for 11 kV and Below Rehabilitation		Rs. In Million					
A.		2020-21	2021-22	2022-23	2023-24	2024-25	Total
1	Rehabilitation of HT Lines						
	Number of proposals	35	38	40	42	45	200
	New Line	787	854	899	944	1012	4497
	Reconductoring	339	368	388	407	436	1938
	Re-routing						
2	New Transformers						
	a. 25 KVA	348.9	393.8	433.2	452.9	492.3	2121.2
	b. 50 KVA	269.1	361.2	412.8	516.0	629.6	2188.8
	c. 100 KVA	50.9	67.9	84.9	101.9	132.4	438.0

	d. 200 KVA	16.2	27.0	32.4	43.2	58.9	177.6
	e. others KVA						
	Sub Total	685.2	850.0	963.3	1114.0	1313.2	4925.7
3	**Installation of 11 kV Panels**	46	50	52	55	59	262
4	**11kV 500 MCM Cable (km)**	29	31	33	34	37	163
Cost of Work for LT Rehabilitation							
B.							
1	**LT Lines Rehabilitation**						
	New LT Line	531.760	648.055	729.728	830.931	965.691	3706.165
	Reconductoring of LT Line	136.393	166.222	187.171	213.129	247.694	950.609
2	**Other Equipment's and Material**						
	a. Single Phase Meters	16.200	49.680	49.908	50.760	51.840	218.388
	b. Three Phase Meters	9.210	15.350	18.420	19.955	21.490	84.425
	Sub Total	25.410	65.030	68.328	70.715	73.330	302.813

- Cost of ABC Cable (Best Case)

Sr. No	Circle	Division	No. of Feeders	Length of ABC Cable (Km)	Amount Required (Rs. In Million)
1	Peshawar	City Rural	2	100.968	120.901
		Charsadda	8	534.01	597.062
		Shabqadar	6	97.865	127.160
		Rural	9	239.099	290.882
2	Bannu	Bannu-1	12	266.632	335.507
		Lakki	7	329.532	359.766
		Tank	2	81.882	98.217
		Bannu-2	8	379.954	437.924
3	Khyber	Khyber	16	449.892	555.906
TOTAL			**70**	**2479.834**	**2923.324**

- Cost of Electrification works in chitral (Best Case)

S.NO	DESCRIPTION	UM	QTY	RATE	TOTAL
1	H.T STRUCTURE 45' LONG	NO	105	64500	6772500
2	H.T STRUCTURE 36' LONG	NO	6120	28500	174420000
3	L.T. STRUCTURE 30' LONG	NO	10010	17900	179179000
4	ACSR DOG	MTR	707586	109	77126874
5	ACSR RABBIT	MTR	669545	56	37494520
6	AAC WASP	MTR	19936	79	1574944
7	AAC ANT	MTR	2681280	49	131382720
8	25 KVA TRANSFORMER	NO	68	130000	8840000
9	50 KVA TRANSFORMER	NO	200	202642	40528400
10	100 KVA TRANSFORMER	NO	37	340000	12580000
11	STEEL CROSS ARM / D-FITTING	NO	342	1940	663480
12	STEEL CROSS ARM WITH BRACES	NO	12450	3040	37848000
13	PIN INSULATOR	NO	37350	240	8964000
14	PIN FOR STEEL CROSS ARM	NO	37350	344	12848400
15	DISC INSULATOR	NO	9348	1050	9815400
16	DEAD END CLAMP FOR DOG/RABBIT	NO	9348	157	1467636
17	SPOOL INSULATOR (LT)	NO	42388	45	1907460
18	D-SHACKLE ASSEMBALY	NO	42388	113	4789844
19	PLATE FORM (SINGLE STRUCTURE)	NO	268	5500	1474000
20	PLATE FORM (DOUBLE STRUCTURE)	NO	37	9240	341880
21	ENY NUT	NO	9348	75	701100
22	EARTH UNIT WITH THIMBLE 10'	NO	16844	529	8910476
23	STAY ROD WITH ELBOW AND THIMBLE	NO	9701	1450	14066450
24	GALVENISED STEEL WIRE 10 MM	KG	265380	114	30253320
25	DROP OUT CUT OUT	NO	915	5300	4849500
26	PVC 19/0.83 4/CORE	MTR	4680	390	1825200
27	P.G CONNECTOR T-110	NO	2408	97	233576
28	P.G CONNECTOR T-150	NO	9348	108	1009584
29	DOUBLE ARMING BOLT 5/8" x 14"	NO	24900	130	3237000
30	DOUBLE ARMING BOLT 5/8" x 20"	NO	1014	169	171366
31	BOLT & NUT 5/8" x 2"	NO	79014	23	1817322
32	BOLT & NUT 5/8" x 10"	NO	6120	73	446760
33	BOLT & NUT 5/8" x 14"	NO	12450	85	1058250
34	WASHER ROUND 1" x 7/16"	NO	97584	17	1658928
35	STAY STRIP / CLAMP	NO	9701	100	970100
36	500 MCM S/CORE	MTR	1800	794	1429200
37	11 KV PANEL	MTR	6	1500000	9000000
38	IN DOOR KIT	NO	18	4700	84600
39	OUT DOOR KIT	NO	18	6900	124200

Distribution System- Expansion and Rehabilitation (Optimally Achievable Case)

DIIP36 - Distribution System Expansion and Rehabilitation (Optimally Achievable Case)

Sr. No.	Description	Rs. In Millions					
		2020-21	2021-22	2022-23	2023-24	2024-25	Total
Cost of Work for 11 kV and Below Expansion							
A.							
1	Expansion of HT Line						
	Number of proposals	05	10	12	12	13	52
	New HT line	112	224	269	269	291	1165
	Reconductoring	48	97	116	116	126	504
2	Transformers						
	a. 25 KVA	7.9	7.9	8.9	8.9	9.8	43.32
	b. 50 KVA	15.5	16.8	16.8	16.8	18.1	83.86
	c. 100 KVA	34.0	34.0	35.7	37.3	37.3	178.26
	d. 200 KVA	70.2	70.2	72.9	75.6	76.7	365.54
	e. others KVA						
	Sub Total	127.5	128.8	134.2	138.6	141.9	671.0
3	11 KV Capacitors						
	a. Fixed 450 KVAR	1	2	2	2	2	8
	b. Fixed 900 KVAR						
	c. Others						
	Sub Total	1	2	2	2	2	8
4	11 KV Panel	07	13	16	16	17	68
5	11kV 500 MCM Cable	4	8	10	10	11	42
Cost of Work for LT Expansion							
B.							
1	New LT Lines						
	No. of proposals	330	335	350	360	372	1747
	New LT line (Total Wasp+ANT)	163.924	166.407	173.858	178.826	184.787	867.80
2	LT Capacitors						
	a. Different KVARs						
3	Other Equipments and Material						
	a. Single Phase Meters	108.000	151.200	162.000	167.400	172.800	761.40
	b. Three Phase Meters	92.100	1.689	1.842	1.996	2.149	99.78

	c. MDI	7.500	3.750	3.750	4.500	5.250	24.75
	Sub Total	207.600	156.639	167.592	173.896	180.199	885.93
Cost of Cost Deposit Work							
C.	Village Electrification						
1	New HT Lines						
	New HT line	217.6	186.6	198.5	204.2	212.0	1018.8
2	New LT Lines						
	New LT line	274.5	254.1	263.0	276.9	300.9	1369.4
3	Transformers						
	a. 25 KVA	9.8	7.9	8.1	8.3	9.5	43.5
	b. 50 KVA	38.7	9.0	9.3	9.5	9.8	76.4
	c. 100 KVA	13.6	14.3	14.3	14.6	14.9	71.6
	d. 200 KVA	18.9	19.4	19.4	20.5	21.1	99.3
	e. others KVA						
	Sub Total	81.0	50.6	51.1	52.9	55.3	290.9
D.	Independent Feeder						
1	New HT Lines						
	New HT line	102.0	43.3	55.1	60.6	67.3	328.4
2	New LT Lines						
	New LT line	Nil	Nil	Nil	Nil	Nil	Nil
3	Transformers						
	a. 25 KVA						
	b. 50 KVA						
	c. 100 KVA	18.3	4.1	5.1	6.1	6.8	40.4
	d. 200 KVA	16.2	8.1	9.7	10.8	11.9	56.7
	e. others KVA						
	Sub Total	34.5	12.2	14.8	16.9	18.7	97.1
4	11 KV Panel	26.2	13.1	14.4	18.3	20.9	92.9

Cost of Work for 11 kV and Below Rehabilitation (Rs. In Millions)							
A.		Rs. In Millions					
1	Rehabilitation of HT Lines	2020-21	2021-22	2022-23	2023-24	2024-25	Total
	Number of proposals	26	42	42	44	45	199
	New line	585	944	944	989	1012	4475
	Reconductoring	252	407	407	426	436	1928
	Re-routing						

2	New Transformers						
	a. 25 KVA	15.8	23.6	26.6	27.6	31.5	125.0
	b. 50 KVA	38.7	82.6	91.6	92.9	90.3	396.1
	c. 100 KVA	34.0	81.5	93.4	95.1	98.5	402.4
	d. 200 KVA	21.6	43.2	48.6	43.2	48.6	205.2
	e. others KVA						
	Sub Total	110.0	230.9	260.2	258.7	268.9	1128.6
3	Installation of 11 kV Panels	34	55	55	58	59	260
4	11kV 500 MCM Cable	21	34	34	36	37	162
Cost of Work for LT Rehabilitation							
B.							
1	LT Lines Rehabilitation						
	New LT Line	65.693	134.9	151.805	152.692	158.019	663.147
	Reconductoring of LT Line	15.839	32.53	36.601	36.815	38.099	159.889
2	Other Equipment's and Material						
	a. Single Phase Meters	8.640	12.96	14.040	14.580	15.120	65.340
	b. Three Phase Meters	1.228	1.842	1.996	1.996	1.996	9.057
	Sub Total	9.868	14.80	16.036	16.576	17.116	74.397

- Cost for Installation of ABC Cable: (Optimally Achievable Case)

Sr. No	Circle	Division	No. of Feeders	Length of ABC Cable (Km)	Amount Required (Rs. In Million)
1	Peshawar	City Rural	2	100.968	120.901
		Charsadda	8	534.01	597.062
		Shabqadar	6	97.865	127.160
		Rural	9	239.099	290.882
2	Bannu	Bannu-1	12	266.632	335.507
		Lakki	7	329.532	359.766
		Tank	2	81.882	98.217

		Bannu-2	8	379.954	437.924
3	Khyber	Khyber	16	449.892	555.906
TOTAL			**70**	**2479.834**	**2923.324**

- **Cost for Electrification works in Chitral (Optimally Achievable Case)**

S.NO	DESCRIPTION	UM	QTY	RATE	TOTAL
1	H.T STRUCTURE 45' LONG	NO	105	64500	6772500
2	H.T STRUCTURE 36' LONG	NO	6120	28500	174420000
3	L.T. STRUCTURE 30' LONG	NO	10010	17900	179179000
4	ACSR DOG	MTR	707586	109	77126874
5	ACSR RABBIT	MTR	669545	56	37494520
6	AAC WASP	MTR	19936	79	1574944
7	AAC ANT	MTR	2681280	49	131382720
8	25 KVA TRANSFORMER	NO	68	130000	8840000
9	50 KVA TRANSFORMER	NO	200	202642	40528400
10	100 KVA TRANSFORMER	NO	37	340000	12580000
11	STEEL CROSS ARM / D-FITTING	NO	342	1940	663480
12	STEEL CROSS ARM WITH BRACES	NO	12450	3040	37848000
13	PIN INSULATOR	NO	37350	240	8964000
14	PIN FOR STEEL CROSS ARM	NO	37350	344	12848400
15	DISC INSULATOR	NO	9348	1050	9815400
16	DEAD END CLAMP FOR DOG/RABBIT	NO	9348	157	1467636
17	SPOOL INSULATOR (LT)	NO	42388	45	1907460
18	D-SHACKLE ASSEMBALY	NO	42388	113	4789844
19	PLATE FORM (SINGLE STRUCTURE)	NO	268	5500	1474000
20	PLATE FORM (DOUBLE STRUCTURE)	NO	37	9240	341880
21	ENY NUT	NO	9348	75	701100
22	EARTH UNIT WITH THIMBLE 10'	NO	16844	529	8910476
23	STAY ROD WITH ELBOW AND THIMBLE	NO	9701	1450	14066450
24	GALVENISED STEEL WIRE 10 MM	KG	265380	114	30253320
25	DROP OUT CUT OUT	NO	915	5300	4849500
26	PVC 19/0.83 4/CORE	MTR	4680	390	1825200
27	P.G CONNECTOR T-110	NO	2408	97	233576
28	P.G CONNECTOR T-150	NO	9348	108	1009584
29	DOUBLE ARMING BOLT 5/8" x 14"	NO	24900	130	3237000
30	DOUBLE ARMING BOLT 5/8" x 20"	NO	1014	169	171366
31	BOLT & NUT 5/8" x 2"	NO	79014	23	1817322
32	BOLT & NUT 5/8" x 10"	NO	6120	73	446760
33	BOLT & NUT 5/8" x 14"	NO	12450	85	1058250
34	WASHER ROUND 1" x 7/16"	NO	97584	17	1658928

35	STAY STRIP / CLAMP	NO	9701	100	970100
36	500 MCM S/CORE	MTR	1800	794	1429200
37	11 KV PANEL	MTR	6	1500000	9000000
38	IN DOOR KIT	NO	18	4700	84600
39	OUT DOOR KIT	NO	18	6900	124200

- Cost for GIS Mapping and P&E:

Sr. No.	Description	Rs. In Million						
			2020-21	2021-22	2022-23	2023-24	2024-25	Total
GIS Mapping								
1	HT Mapping							
	Number of 11 kV Feeders		1	2	2	2	3	10
	Length of HT Lines mapped							
2	LT Mapping							
	Number ofLT Lines		4	6	20	20	20	70
	Length of LT Lines mapped							
3	Tools Required							
	GIS Mapping Software Licenses (2M Lumpsum)		50					50
	Plotters		5					5
	Computers		1.35					1.35
	GPS devices		3					3
4	Total Cost		64.35	8	22	22	23	139.35

Sr. No.	Description	Rs. In Million						
			2020-21	2021-22	2022-23	2023-24	2024-25	Total
Study Based Planning using GIS Maps with Modern Planning Tools - Transition Plan								
1	Tools Required							
	Simulation Software Licenses		50					50

B. Capital Expenditure and Additional Operating Costs for Other Functional Improvement Plans:

Summary of Capital and Operational Expenditure Costs

The Scope and Cost of Functional Plans for best case is same which is mentioned below.

DIIP37 - Summary of Capital and Operational Expenditure Costs

	Items	FY-2020-21	FY-2021-22	FY-2022-23	FY-2023-24	FY-2024-25	Total
		Total	Total	Total	Total	Total	Total
A	Commercial Improvement Plan	284.372	518.759	592.404	497.015	465.885	2358.44
B	Financial Improvement Plan	261.15	224.15	225.57	230.31	235.06	1176.24

C	HR Improvement Plan		95	100	92.5	86	373.5
D	Communications Improvement Plan		28.5	28.5	28.5	28.5	114
Subtotal: (A+B+C+D)		545.522	866.409	946.474	848.325	815.445	4022.175

DIIP 39-Costing of Commercial Improvement Plan

Commercial Improvement Plan Items (Illustrations below)		FY-2020-21	FY-2021-22	FY-2022-23	FY-2023-24	FY-2024-25	Total
		Total	Total	Total	Total	Total	Total
A	AMR Metering	72	360	420	300	300	1452
B	SMS Data collection	1.2					1.2
C	Consumer Census	0.232	0.255	0.28	0.309	0.339	1.415
D	Data Center	33	19.2	21.1	29.1	1.79	104.19
E	Email Hosting	0.84	0.924	1.016	1.118	1.229	5.127
F	Billing SMS	4.8	5.28	5.808	6.388	7.027	29.303
G	HHUs for meter reading	30	30	30	30	30	150
F	Licenses and support	142.3	103.1	114.2	130.1	125.5	615.2
Total		284.372	518.759	592.404	497.015	465.885	2358.44

DIIP 40 -Costing of Financial Management Improvement Plan

Financial Improvement Plan Items (Illustrations below)		FY-2020-21	FY-2021-22	FY-2022-23	FY-2023-24	FY-2024-25	Total
		Total	Total	Total	Total	Total	Total
A	ERP system implementation	264.15	224.15	225.57	230.31	235.06	1176.24
B	Revamping the Internal Audit						
C	Other studies and models preparation	-					
G	IT infrastructure to support new initiatives						
F	Others etc…						
Total		261.15	224.15	225.57	230.31	235.06	1176.24

DIIP 41- Costing of Human Resource Improvement Plan

HR Improvement Plan Items (Illustrations below)		FY-2020-21	FY-2021-22	FY-2022-23	FY-2023-24	FY-2024-25	Total
		Total	Total	Total	Total	Total	Total
A	Revamping of Training Centers		28.5	33.5	26	19.5	107.5
B	Training of employees through external training institutions		39.5	39.5	39.5	39.5	158
C	Human Resource Information System Implementation		10	10	10	10	40
D	Conducting the yard stick study		5	5	5	5	20
E	IT infrastructure to support new initiatives		7	7	7	7	28
F	Improving the working environment		5	5	5	5	20
G	Others etc…						
Total			95	100	92.5	86	373.5

DIIP 42 Costing of Communications Improvement Plan

Communications Plan Items (Illustrations below)		FY-2020-21	FY-2021-22	FY-2022-23	FY-2023-24	FY-2024-25	Total
		Total	Total	Total	Total	Total	Total
A	Improving Internal Communications with Employees		22.5	22.5	22.5	22.5	90
B	Improving External Communications with Customers		5	5	5	5	20
C	Communication material		1	1	1	1	4
D	Others etc…						
Total			28.5	28.5	28.5	28.5	114

C. Summary Costs for the Integrated Investment Plan

Summary of Cost for Best Case

DIIP43- Summary Costs for the Investment Plan: Summary of Cost for Best Case

Business Plan- DIIP PESCO (TOTAL COST OF BEST CASE)						
DESCRIPTION	2020-21	2021-22	2022-23	2023-24	2024-25	TOTAL
Distribution cost without deposit	11356	13401	15576	14344	16068	70745
ABC Cable Installation	350	786	916	872		2924
Electrification in Chitral	150	717	311	216	165	1559
Transmission cost without Others	4291	3943	5200	2723	4914	21072
Total Cost	16147	18847	22003	18155	21147	96299

DESCRIPTION	2020-21	2021-22	2022-23	2023-24	2024-25	TOTAL
Distribution deposit cost	2578	3108	3519	4101	4642	17948
Transmission cost Others	1557	4837	4789	3452	0	14634
Total Cost	4135	7945	8308	7553	4642	32582

Summary of Cost for Optimally Achievable Case

DIIP44- Summary Costs for the Investment Plan: Summary of Cost for Optimally Achievable Case

Business Plan- DIIP PESCO (TOTAL COST OF ACHIEVABLE CASE)						
DESCRIPTION	2020-21	2021-22	2022-23	2023-24	2024-25	TOTAL
Distribution cost without deposit	3136	3928	4003	4113	4231	19411
ABC Cable Installation	350	786	916	872		2924
Electrification in Chitral	150	717	311	216	165	1559
Transmission cost without Others	4000	3000	2500	2000	2050	13550
Total Cost	7636	8431	7730	7201	6446	37444

DESCRIPTION	2020-21	2021-22	2022-23	2023-24	2024-25	TOTAL
Distribution deposit cost	1020	773	835	897	965	4490
Transmission cost Others	1557	4837	4789	3452	0	14634
Total Cost	2577	5610	5624	4349	965	19124

Summary of O&M Costs

DIIP45- Summary Costs for the Investment Plan: Summary of O&M Costs

O&M COST (ACHIEVABLE CASE)						
DESCRIPTION	2020-21	2021-22	2022-23	2023-24	2024-25	TOTAL
Distribution O&M cost	63	79	80	82	85	388
Transmission O&M cosT	80.00	60.00	50.00	40.00	41.00	271.00
Distribution deposit O&M cost	20.4	15.5	16.7	17.9	19.3	89.8
Transmission O&M cost Others	31.14	96.73	95.77	69.04	0.00	292.68
Total O&M Cost	194.54	251.23	242.47	208.94	145.3	1041.48

D. Financing Plan:

DIIP 46- Financing Plan

Peshawar Electric Supply Company

Investment

		2020-21 Projected	2021-22 Projected	2022-23 Projected	2023-24 Projected	2024-25 Projected
A Investment Plan						
DOP	[Mln Rs]	1,500	1,569	1,574	1,599	1,657
ELR	[Mln Rs]	1,636	2,359	2,429	2,514	2,574
STG	[Mln Rs]	4,000	3,000	2,500	2,000	2,050
Others						
Electrification work at different valleys of district Chitral	[Mln Rs]	150	717	311	216	165
132KV Grid system & upgrdation of 33KV Grid System in District Chitral	[Mln Rs]	159.98	150	-	-	-
ABC Cable for Peshawar, Khyber & Bannu Circle	[Mln Rs]	350	786	916	872	
Evacuation of Power from 220/132KV Grid Station Swabi	[Mln Rs]	150	300	288.62	-	-
Supply of Power to Special Economic Zone Hattar	[Mln Rs]	300	737	-	-	-
Supply of Power to Special Economic Zone Rashakai	[Mln Rs]	946.80	879	-	-	-
Establishment of 132 KV Grid Station Matta	[Mln Rs]		771			
STG Projects under PSDP special finances (Proposed)	[Mln Rs]		2,000	4,500	3,451.86	-
Deposit Work	[Mln Rs]	1,020	773	835	897	965
Total	[Mln Rs]	10,213	14,041	13,354	11,550	7,411

Section - VII

Benefits and Financial Analysis

A. Expansion and Rehabilitation of Secondary Transmission and Distribution System:

i. Tangible Benefits

Additional Energy Available for Sales (for Transmission)				
Year	Best		Achievable	
	MVA Added	Additional Energy for Sales (MKWH)	MVA Added	Additional Energy for Sales (MKWH)
2020-2021	710.50	1322.60	684.50	1274.20
2021-2022	817.50	1521.78	671.50	1250.00
2022-2023	1186.00	2207.74	870.00	1619.51
2023-2024	558.00	1038.72	580.00	1079.67
2024-2025	608.00	1131.79	260.00	483.99

Transmission - Loss Reduction				
Year	MW		MKWh	
	Ideal	Realistic	Ideal	Realistic
2020-2021	11.20	11.20	53.96	53.96
2021-2022	14.40	14.40	69.38	69.38
2022-2023	15.70	11.90	75.64	57.33
2023-2024	18.22	10.10	87.78	48.66
2024-2025	12.00	5.00	57.82	24.09

Distribution - Loss Reduction						
Year	HT Rehab+Chitral		LT Rehab+ABC		Total	
	Units MKWh		Units MKWh		Units MKWh	
	Ideal	Realistic	Ideal	Realistic	Ideal	Realistic
2020-2021	78	60	119.8	14	197.8	74
2021-2022	85.2	62.4	187	62.9	272.2	125.3
2022-2023	90	64.8	259.4	119.1	349.4	183.9
2023-2024	88.8	67.2	365.2	202.4	454	269.6
2024-2025	98.4	69.6	486.56	294.24	584.96	363.84

ii. **Non-tangible Benefits**

The other benefits like improvement in voltage profile, improving the overloading of the network will be achieved after completion of project.

Section - VIII

Financial Projections

Please find below the profit and loss account, balance sheet and cash flow of PESCO for tariff control period.

PESHAWAR ELECTRIC SUPPLY COMPANY

Financial Statements

Rs. In Million

INCOME STATEMENT	Audited	Projected	Projected	Projected	Projected	Projected
	2019-20	2020-21	2021-22	2022-23	2023-24	2024-25
SALES						
Sale of Power	127,504	156,870	177,163	192,978	208,133	225,386
Rental & Service income	46	53	61	70	81	93
Total Sales	**127,550**	**156,923**	**177,224**	**193,049**	**208,214**	**225,479**
Subsidy	73,410	56,700	48,389	47,987	47,450	46,204
Amortization of deferred Credit	1,708	1,701	1,739	1,774	1,808	1,840
	202,668	**215,324**	**227,352**	**242,809**	**257,472**	**273,523**
Purchase of Power	**199,594**	**199,200**	**207,121**	**215,492**	**223,839**	**232,653**
Gross Profit	**3,073**	**16,124**	**20,230**	**27,317**	**33,633**	**40,869**
OPERATING EXPENSESS						
Establishment Cost	20,129	24,589	27,073	30,023	33,987	38,154
Maintenance & repair and Others	788	1,150	1,208	1,268	1,331	1,398
Depreciation	3,026	3,334	3,796	4,235	4,615	4,859
Provision for Bad Debt	4,734	7,363	6,962	8,189	8,663	8,962
Total Operating Expenses	**28,677**	**36,436**	**39,039**	**43,715**	**48,597**	**53,372**
OPERATING PROFIT / (LOSS)	**(25,604)**	**(20,312)**	**(18,808)**	**(16,398)**	**(14,964)**	**(12,503)**
ADD: Other Income	13,674	4,891	5,044	5,136	5,162	5,259
EBIT	**(11,930)**	**(15,421)**	**(13,765)**	**(11,262)**	**(9,803)**	**(7,244)**
LESS: Interest Expense	842	1,430	1,502	1,577	1,624	1,656
PROFIT / (LOSS) BEFORE TAX	**(12,772)**	**(16,851)**	**(15,266)**	**(12,838)**	**(11,427)**	**(8,901)**
Income Tax/Turnover tax	**1,851**	**2,379**	**2,684**	**2,922**	**3,150**	**3,410**
NET PROFIT/LOSS FOR THE YEAR	**(14,622)**	**(19,231)**	**(17,950)**	**(15,761)**	**(14,577)**	**(12,311)**

Section - IX

Investment Plan Implementation

Business Planning Organization for Preparation of Investment Plans

The stewardship responsibility of the Board of Directors (the Board) is to have an oversight role over the management of the DISCO, which is responsible for the day-to-day conduct of the business. The Board must assess and ensure systems are in place to identify and manage the risks of the Company's business with the underline objective of preserving Company's assets and steering it in a strategic direction that ensures fulfilling its objectives. The Board, through the Chief Executive Officer (CEO), sets the attitude and disposition of the Company towards achieving sets of goals and objectives, in compliance with applicable laws and regulations. Business Plan is a tool that helps a company to achieve its goals and objectives.

PESCO has started the business planning initiative / DIIP that will entail company's goals and objectives to the initiatives that are required to meet those objectives. The integrated cross-functional plan will cover the core business (transmission and distribution system expansion and rehabilitation) and support business (improving the commercial, financial, HR and other functional improvement) initiatives to meet the stated objectives. The PESCO's business plan for 2020-21 to 2024-25 is prepared by PESCO and will be update each year. In-order to sustain this initiative, a strategic planning organization is required within PESCO, who can assist the CEO of the Company to prepare, maintain, improve, monitor and get implemented the business plan.

Section - X

Implementation, Monitoring Plan and Reporting

Transmission Expansion and Rehabilitation
Distribution Expansion and Rehabilitation:

ID	Task Name	Duration	Start	Finish
1	integrated generation, transmission and distribution	1320 days	Wed 01-07-20	Tue 22-07-25
2	Grid stations-Exp And Rehab	1320 days	Wed 01-07-20	Tue 22-07-25
3	designing and procurement	240 days	Wed 01-07-20	Tue 01-06-21
4	designing and development	6 mons	Wed 01-07-20	Tue 15-12-20
5	procurement	6 mons	Wed 01-07-20	Tue 15-12-20
6	delivery	6 mons	Wed 16-12-20	Tue 01-06-21
7	expansion and rehabilitation	1200 days	Wed 16-12-20	Tue 22-07-25
8	new grid construction	1200 days	Wed 16-12-20	Tue 22-07-25
9	conversion	60 mons	Wed 16-12-20	Tue 22-07-25
10	augmentation	60 mons	Wed 16-12-20	Tue 22-07-25
11	extension	60 mons	Wed 16-12-20	Tue 22-07-25
12	transmission lines	60 mons	Wed 16-12-20	Tue 22-07-25
13	designing and procurement	240 days	Wed 01-07-20	Tue 01-06-21
14	designing and development	6 mons	Wed 01-07-20	Tue 15-12-20
15	procurement	6 mons	Wed 01-07-20	Tue 15-12-20
16	delivery of material	6 mons	Wed 16-12-20	Tue 01-06-21
17	expension and rehabilitation	1200 days	Wed 16-12-20	Tue 22-07-25
18	new transmission lines	1200 days	Wed 16-12-20	Tue 22-07-25
19	reconductoring and upgrading	60 mons	Wed 16-12-20	Tue 22-07-25
20	reconductoring and rerouting	60 mons	Wed 16-12-20	Tue 22-07-25
21	fixed and switched capacitor installation	60 mons	Wed 16-12-20	Tue 22-07-25
22	distribution system	1320 days	Wed 01-07-20	Tue 22-07-25
23	rehabilitation and reconductoring	1320 days	Wed 01-07-20	Tue 22-07-25
24	designing and procurement	240 days	Wed 01-07-20	Tue 01-06-21
25	designing and development	6 mons	Wed 01-07-20	Tue 15-12-20
26	procurement	6 mons	Wed 01-07-20	Tue 15-12-20
27	delivery	6 mons	Wed 16-12-20	Tue 01-06-21
28	11kv and Below Rehabilitation	1200 days	Wed 16-12-20	Tue 22-07-25
29	Rehabilitation of HT lines	60 mons	Wed 16-12-20	Tue 22-07-25
30	New HT lines	60 mons	Wed 16-12-20	Tue 22-07-25
31	LT Rehabilitation	1200 days	Wed 16-12-20	Tue 22-07-25
32	Rehabilitaion of LT lines	60 mons	Wed 16-12-20	Tue 22-07-25

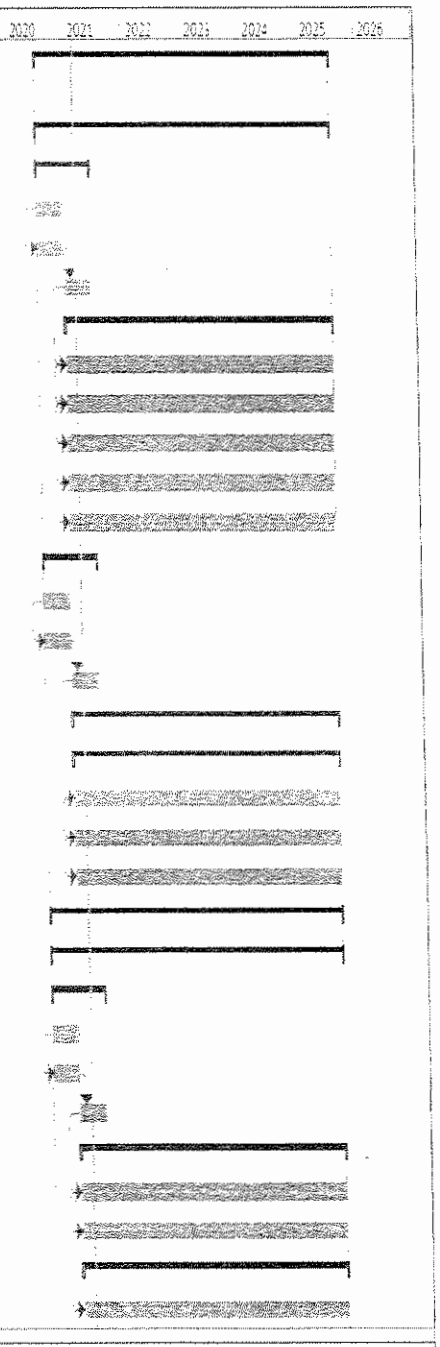

Page 1

ID	Task Name	Duration	Start	Finish
33	overloaded Transformer Augementation	60 mons	Wed 16-12-20	Tue 22-07-25
34	New Transformer substation	60 mons	Wed 16-12-20	Tue 22-07-25
35	Replacement of 2-leg Transformers	60 mons	Wed 16-12-20	Tue 22-07-25
36	New LT lines	60 mons	Wed 16-12-20	Tue 22-07-25
37	**expension**	**1200 days**	**Wed 16-12-20**	**Tue 22-07-25**
38	**11kv and Below Expansion**	**1200 days**	**Wed 16-12-20**	**Tue 22-07-25**
39	New HT lines	60 mons	Wed 16-12-20	Tue 22-07-25
40	transformers	60 mons	Wed 16-12-20	Tue 22-07-25
41	**LT Expansion**	**1200 days**	**Wed 16-12-20**	**Tue 22-07-25**
42	New LT lines	60 mons	Wed 16-12-20	Tue 22-07-25
43	transformers	60 mons	Wed 16-12-20	Tue 22-07-25
44	**planning and Engineering studies**	**1296 days**	**Wed 01-07-20**	**Wed 18-06-25**
45	GIS Mapping	64 mons	Wed 01-07-20	Tue 27-05-25
46	Study Based planning	53 mons	Thu 27-05-21	Wed 18-06-25

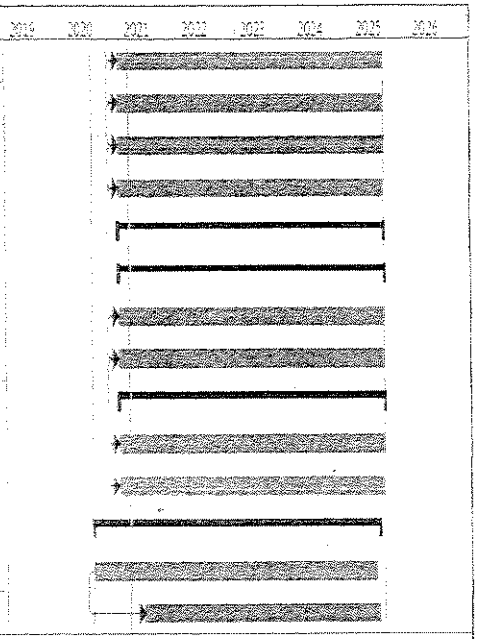

Page 2

LM Safety, Tools and Equipment:

ID	Task Name	Duration	Start	Finish
1	lineman safety program	1300 days	Wed 01-07-20	Tue 24-06-25
2	vehicles	1200 days	Wed 01-07-20	Tue 04-02-25
3	bucket Mounted trucks	1200 days	Wed 01-07-20	Tue 04-02-25
4	Ist Lot(38 trucks)	240 days	Wed 01-07-20	Tue 01-06-21
5	procurement	6 mons	Wed 01-07-20	Tue 15-12-20
6	delivery	6 mons	Wed 16-12-20	Tue 01-06-21
7	2nd Lot(134 trucks)	240 days	Tue 01-06-21	Mon 02-05-22
8	procurement	6 mons	Tue 01-06-21	Mon 15-11-21
9	delivery	6 mons	Tue 16-11-21	Mon 02-05-22
10	3rd Lot(6 trucks)	240 days	Tue 03-05-22	Mon 03-04-23
11	procurement	6 mons	Tue 03-05-22	Mon 17-10-22
12	delivery	6 mons	Tue 18-10-22	Mon 03-04-23
13	4rth Lot(6 trucks)	240 days	Tue 04-04-23	Mon 04-03-24
14	procurement	6 mons	Tue 04-04-23	Mon 18-09-23
15	delivery	6 mons	Tue 19-09-23	Mon 04-03-24
16	5th Lot(6 trucks)	240 days	Wed 06-03-24	Tue 04-02-25
17	procurement	6 mons	Wed 06-03-24	Tue 20-08-24
18	delivery	6 mons	Wed 21-08-24	Tue 04-02-25
19	Ravis	1200 days	Wed 01-07-20	Tue 04-02-25
20	Ist Lot(32 Ravis)	240 days	Wed 01-07-20	Tue 01-06-21
21	procurement	6 mons	Wed 01-07-20	Tue 15-12-20
22	delivery	6 mons	Wed 16-12-20	Tue 01-06-21
23	2nd Lot(110 Ravis)	240 days	Tue 01-06-21	Mon 02-05-22
24	procurement	6 mons	Tue 01-06-21	Mon 15-11-21
25	delivery	6 mons	Tue 16-11-21	Mon 02-05-22
26	3rd Lot(6 Ravis)	240 days	Tue 03-05-22	Mon 03-04-23
27	procurement	6 mons	Tue 03-05-22	Mon 17-10-22
28	delivery	6 mons	Tue 18-10-22	Mon 03-04-23
29	4rth Lot(6 Ravis)	240 days	Tue 04-04-23	Mon 04-03-24
30	procurement	6 mons	Tue 04-04-23	Mon 18-09-23
31	delivery	6 mons	Tue 19-09-23	Mon 04-03-24
32	5th Lot(6 Ravis)	240 days	Wed 06-03-24	Tue 04-02-25

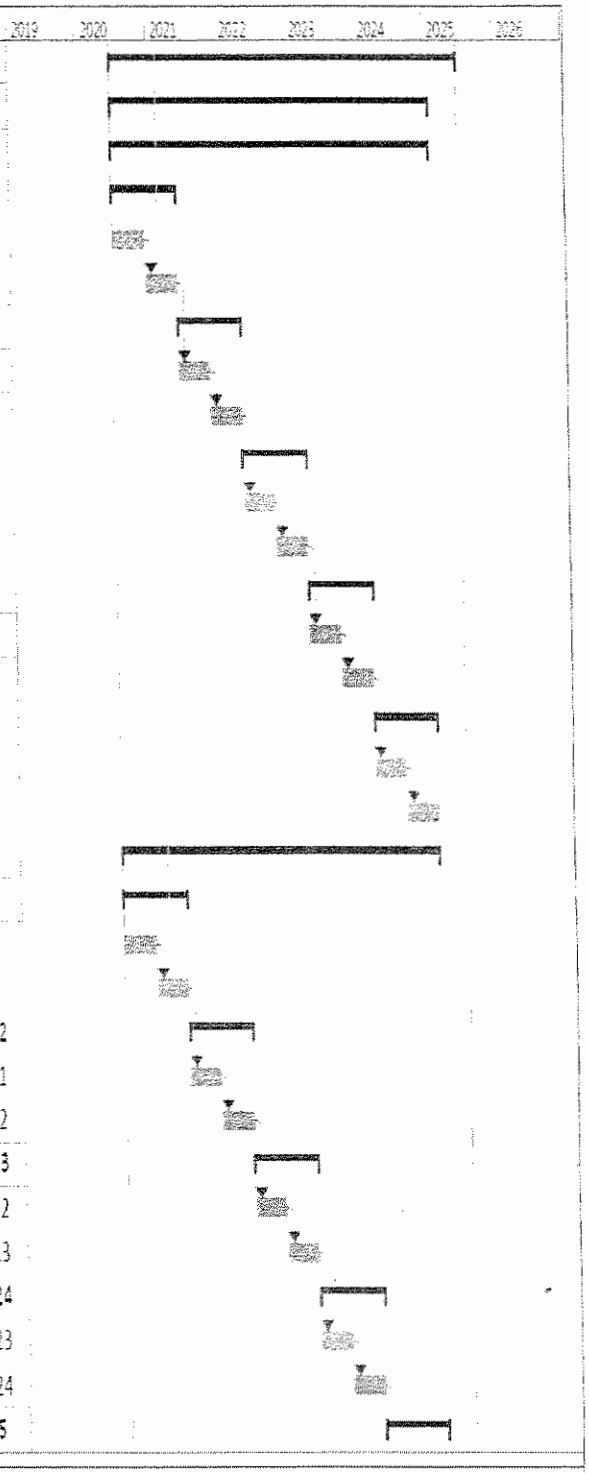

Page 1

ID	Task Name	Duration	Start	Finish
33	procurement	6 mons	Wed 06-03-24	Tue 20-08-24
34	delivery	6 mons	Wed 21-08-24	Tue 04-02-25
35	**Mobile phones**	**1200 days**	**Wed 01-07-20**	**Tue 04-02-25**
36	**1st Lot(38 phones)**	**240 days**	**Wed 01-07-20**	**Tue 01-06-21**
37	procurement	6 mons	Wed 01-07-20	Tue 15-12-20
38	delivery	6 mons	Wed 16-12-20	Tue 01-06-21
39	**2nd Lot(134 phones)**	**240 days**	**Tue 01-06-21**	**Mon 02-05-22**
40	procurement	6 mons	Tue 01-06-21	Mon 15-11-21
41	delivery	6 mons	Tue 16-11-21	Mon 02-05-22
42	**3rd Lot(6 phones)**	**240 days**	**Tue 03-05-22**	**Mon 03-04-23**
43	procurement	6 mons	Tue 03-05-22	Mon 17-10-22
44	delivery	6 mons	Tue 18-10-22	Mon 03-04-23
45	**4rth Lot(6 phones)**	**240 days**	**Tue 04-04-23**	**Mon 04-03-24**
46	procurement	6 mons	Tue 04-04-23	Mon 18-09-23
47	delivery	6 mons	Tue 19-09-23	Mon 04-03-24
48	**5th Lot(6 phones)**	**240 days**	**Wed 06-03-24**	**Tue 04-02-25**
49	procurement	6 mons	Wed 06-03-24	Tue 20-08-24
50	delivery	6 mons	Wed 21-08-24	Tue 04-02-25
51	Tools & PPEs	1268 days	Wed 01-07-20	Fri 09-05-25
52	procurement	48 mons	Wed 01-07-20	Tue 05-03-24
53	delivery	48.4 mons	Wed 25-08-21	Fri 09-05-25

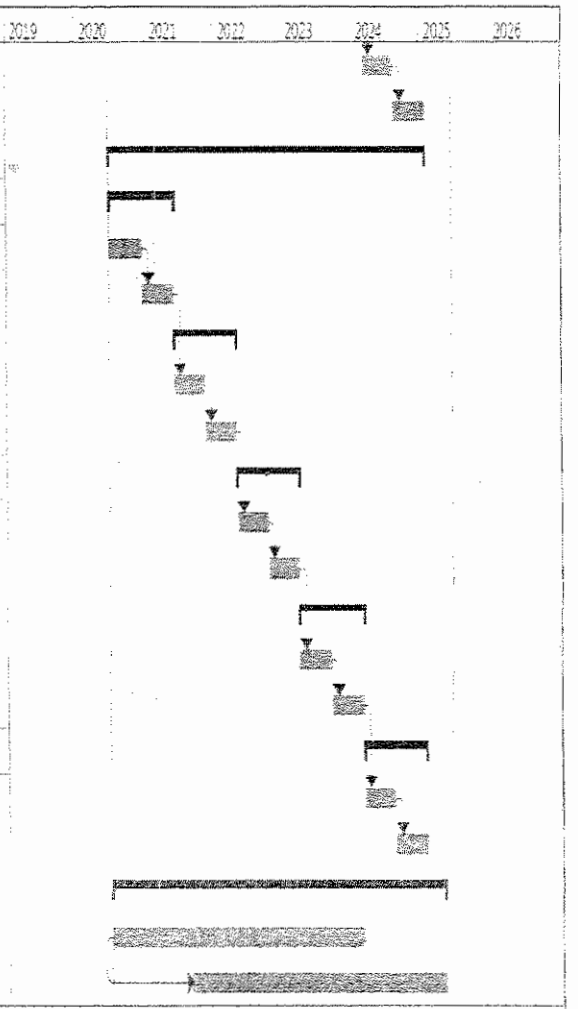

Page 2

Commercial Plan Schedule:

ID	Task Mode	Task Name	Duration	Start
1		commercial improvement plan	721 days	Wed 01-07-20
2		PESCO-Wide HHU Expansion	479 days	Wed 01-07-20
3		Mobile HHUs (1788 Units)	240 days	Wed 01-07-20
4		procurement	6 mons	Wed 01-07-20
5		delivery	6 mons	Wed 16-12-20
6		other equipments	240 days	Wed 01-07-20
7		PCs (142)	240 days	Wed 01-07-20
8		procurement	6 mons	Wed 01-07-20
9		delivery	6 mons	Wed 16-12-20
10		printers (142 units)	240 days	Wed 01-07-20
11		procurement	6 mons	Wed 01-07-20
12		delivery	6 mons	Wed 16-12-20
13		DSL Connection(137 units)	240 days	Wed 01-07-20
14		procurement	6 mons	Wed 01-07-20
15		delivery	6 mons	Wed 16-12-20
16		furniture & Accessories (150 units)	240 days	Wed 01-07-20
17		procurement	6 mons	Wed 01-07-20
18		delivery	6 mons	Wed 16-12-20
19		split Air conditioners (150 units)	240 days	Wed 01-07-20
20		procurement	6 mons	Wed 01-07-20
21		delivery	6 mons	Wed 16-12-20
22		transportation	479 days	Wed 01-07-20
23		bikes (930 units)	240 days	Wed 01-07-20
24		procurement	6 mons	Wed 01-07-20
25		delivery	6 mons	Wed 16-12-20
26		bikes (1395 units)	240 days	Tue 01-06-21
27		procurement	6 mons	Tue 01-06-21
28		delivery	6 mons	Tue 16-11-21
29		PESCO-Wide AMR Expansion	240 days	Wed 01-07-20
30		AMRs-Whole Current (61608 units)	240 days	Wed 01-07-20
31		procurement	3 mons	Wed 01-07-20

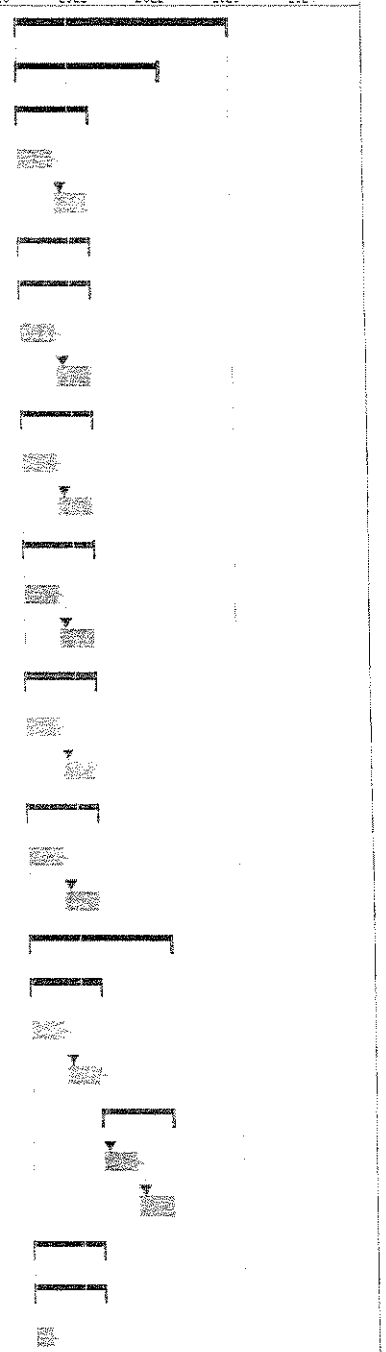

Page 1

ID	Task Mode	Task Name	Duration	Start
32		supply	3 mons	Wed 23-09-20
33		installation	6 mons	Wed 16-12-20
34		**AMRS-HT/LT-for new connections(6252 units)**	**240 days**	**Wed 01-07-20**
35		procurement	3 mons	Wed 01-07-20
36		supply	3 mons	Wed 23-09-20
37		installation	6 mons	Wed 16-12-20
38		**AMRs-Whole Current-for tubewells (56599 units)**	**240 days**	**Wed 01-07-20**
39		procurement	3 mons	Wed 01-07-20
40		supply	3 mons	Wed 23-09-20
41		installation	6 mons	Wed 16-12-20
42		**PESCO-Wide CIS Expansion**	**721 days**	**Wed 01-07-20**
43		IT infrastructure procurement	24 mons	Wed 01-07-20
44		IT infrastructure deployment	24 mons	Thu 03-06-21
45		Database configuration and updating	24 mons	Thu 03-06-21
46		**customer Service center improvement (254 facilities)**	**480 days**	**Wed 01-07-20**
47		revamping of CSC Rooms	24 mons	Wed 01-07-20
48		provision of furniture & fixtures	24 mons	Wed 01-07-20
49		computing equipment	24 mons	Wed 01-07-20
50		**PESCO-Wide survillience for Anti-theft**	**480 days**	**Wed 01-07-20**
51		proc & supply of 37 Toyota Hilux	24 mons	Wed 01-07-20
52		proc & supply of Tooling sets	24 mons	Wed 01-07-20
53		proc & supply of Mobile phones	24 mons	Wed 01-07-20

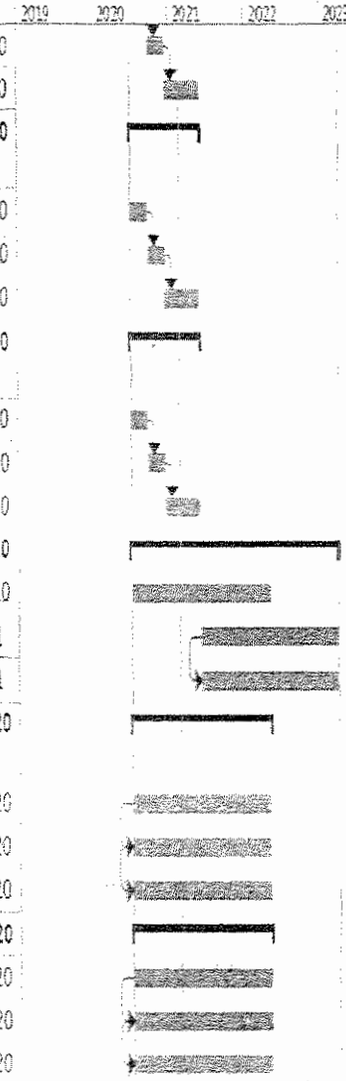

Page 2

Communications Plan Schedule:

ID	Task Name	Duration	Start
1	**communications improvement plan**	**1305 days**	**Wed 01-07-20**
2	**internal communications**	**1044 days**	**Thu 01-07-21**
3	Email server deployment	12 mons	Thu 01-07-21
4	provision of scanners	12 mons	Thu 01-07-21
5	provision of smart phones	12 mons	Thu 01-07-21
6	**Annual employee event**	**1044 days**	**Thu 01-07-21**
7	first event	1 day	Thu 01-07-21
8	second event	1 day	Fri 01-07-22
9	third event	1 day	Fri 30-06-23
10	fourth event	1 day	Mon 01-07-24
11	fifth event	1 day	Tue 01-07-25
12	**External communications**	**1280 days**	**Wed 01-07-20**
13	**Mass Media Campaigns**	**1200 days**	**Wed 01-07-20**
14	newspaper Ads in leading local news paper	60 mons	Wed 01-07-20
15	cable TV spots throughout peshawar and its surroundings	60 mons	Wed 01-07-20
16	public service announcement local FM radio	60 mons	Wed 01-07-20
17	Billboards & street pole streamers	60 mons	Wed 01-07-20
18	radio talk shows	60 mons	Wed 01-07-20
19	**public outreach & awareness programmes**	**1200 days**	**Wed 01-07-20**
20	university campus sessions	60 mons	Wed 01-07-20
21	local imam masjid sessions	60 mons	Wed 01-07-20
22	community center sessions	60 mons	Wed 01-07-20
23	chamber of commerce sessions	60 mons	Wed 01-07-20
24	press club meetings	60 mons	Wed 01-07-20
25	energy conservation walk	60 mons	Wed 01-07-20
26	painting & debate competition	60 mons	Wed 01-07-20
27	monthly news letter	64 mons	Wed 01-07-20

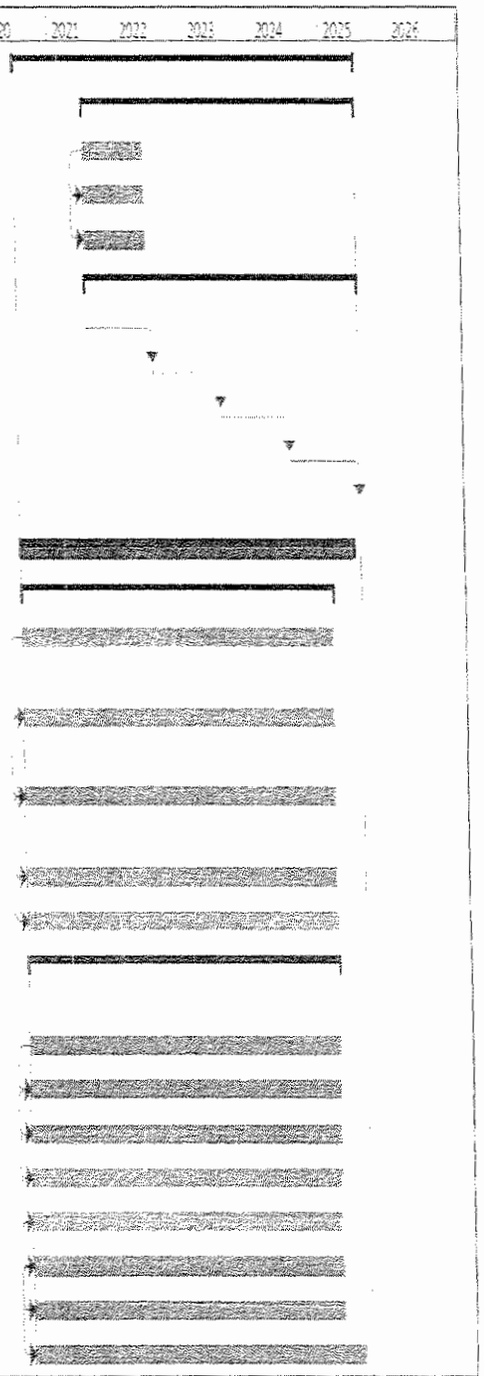

Page 1

HR Plan Schedule:

ID	Task Name	Duration	Start	Finish
1	**HR improvement plan**	**1221 days**	**Wed 01-07-20**	**Wed 05-03-25**
2	**training & capacity building**	**960 days**	**Thu 01-07-21**	**Wed 05-03-25**
3	management trainings	48 mons	Thu 01-07-21	Wed 05-03-25
4	international exchanges	48 mons	Thu 01-07-21	Wed 05-03-25
5	**CTC Upgrade (3 CTCs)**	**719 days**	**Wed 01-07-20**	**Mon 03-04-23**
6	**CTC # 1**	**239 days**	**Wed 01-07-20**	**Mon 31-05-21**
7	procurement of fur	3 mons	Wed 01-07-20	Tue 22-09-20
8	civil works	6 mons	Wed 23-09-20	Tue 09-03-21
9	renovation & revan	3 mons	Tue 09-03-21	Mon 31-05-21
10	**CTC # 2**	**240 days**	**Tue 01-06-21**	**Mon 02-05-22**
11	procurement of furniture & fixtures	3 mons	Tue 01-06-21	Mon 23-08-21
12	civil works	6 mons	Tue 24-08-21	Mon 07-02-22
13	renovation & revamping	3 mons	Tue 08-02-22	Mon 02-05-22
14	**CTC # 3**	**240 days**	**Tue 03-05-22**	**Mon 03-04-23**
15	procurement of furniture & fixtures	3 mons	Tue 03-05-22	Mon 25-07-22
16	civil works	6 mons	Tue 26-07-22	Mon 09-01-23
17	renovation & revamping	3 mons	Tue 10-01-23	Mon 03-04-23
18	**Improving work environment**	**962 days**	**Wed 01-07-20**	**Thu 07-03-24**
19	improving 20% of facilities	12 mons	Wed 01-07-20	Tue 01-06-21
20	improving 60% of facilities	12 mons	Wed 02-06-21	Tue 03-05-22

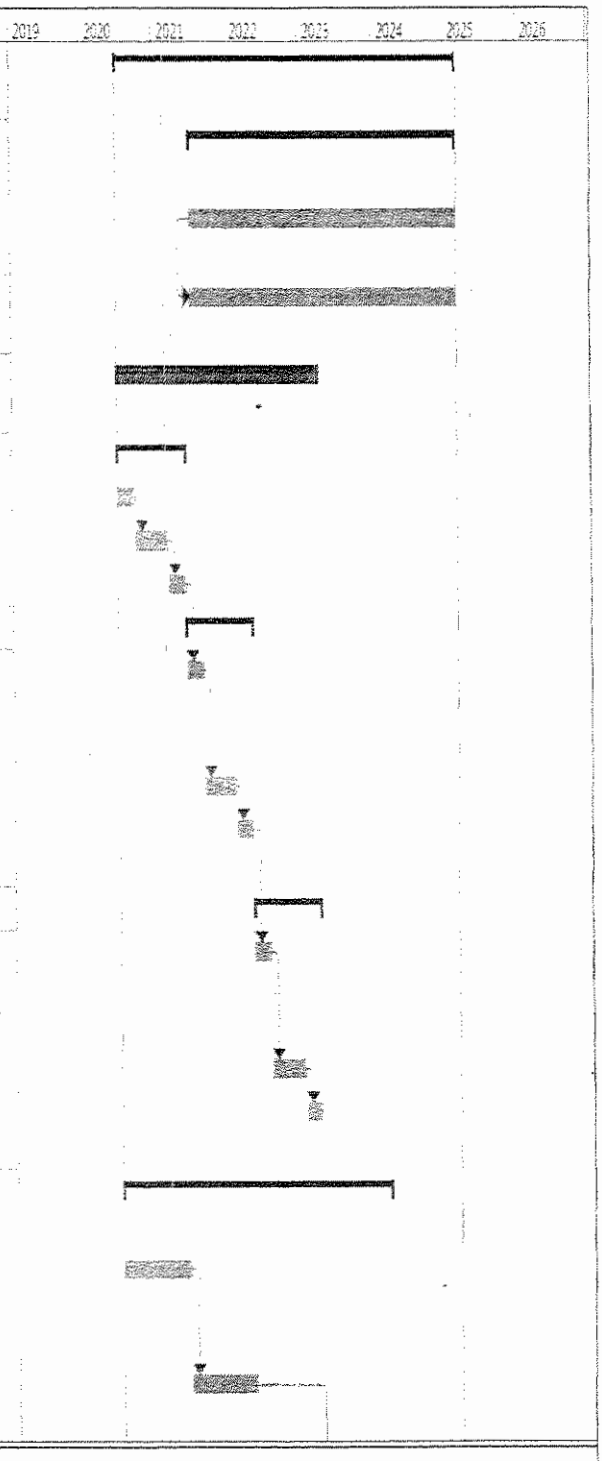

Page 1

ID	Task Name	Duration	Start	Finish
21	improving 20% of facilities	12 mons	Fri 07-04-23	Thu 07-03-24
22	yard stick study	480 days	Wed 01-07-20	Tue 03-05-22
23	hiring of consultant	6 mons	Wed 01-07-20	Tue 15-12-20
24	conducting Y5 study	18 mons	Wed 16-12-20	Tue 03-05-22

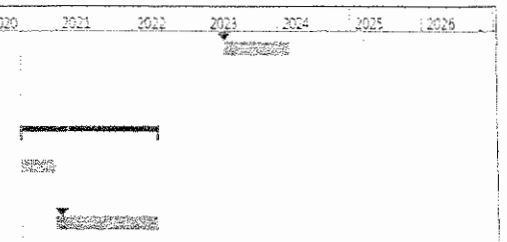

Page 2

Section - XI

Environmental and Social Assessment and Mitigation Plans

There will be environmental and social impacts of the implementing these projects. A detailed environmental and social assessment is required to be carried out to successfully complete this project.

ANNEX-1

PESCO GOALS AND OBJECTIVES

Strategic Goals	Strategic Objectives	Cordinating Directorate(s)	Leading Directorate	Tareget Measurement	Measurement 2019-20	Final Year Objective 2020-21 to 2024-25					Project Manager	Supporting Plan
						2020-21	2021-22	2022-23	2023-24	2024-25		
1.0 Improve Operational Effeciency	**1.1.a** Reduce technical and comercial losses -Improved HT/LT Ratio -Improved power factor -Improved voltage profile Reduce average length of HT feeders -AT&C based Investments -Single Phase transformers piloting to hard areas w/o LT -ABC expansion (conversion of bare LT with HT)	P&F, PD Const, PD GSC, MM, Fin, Comm, Ops, MIS	Technical	%age of KWh	Above 30%	37.9%	36.8%	35.8%	34.7%	33.6%	GM Technical, CE P&E and team	DIIP Transmission and Distribution Plan

	Strategic Objectives	Cordinating Directorate(s)	Leading Directorate	Target Measurement	Measurement 2019-20	Final Year Objective 2020-21 to 2024-25					Project Manager	Supporting Plan
						2020-21	2021-22	2022-23	2023-24	2024-25		
1.0 Improve Operational Efficiency	1.1.b Reduce Comercial Losses	CSD, MIS and Ops	CSD	%age of KWh	This is progressive decreased by % of the commercial loss. Therefore, 2.5% commercial loss will be reduced	0.50%	0.50%	0.50%	0.50%	0.50%	CSD and his team	DIIP- Commercial Improvement Plan(CIP)
	1.2 Improve SAIDA/SAIFI To meet specified regulatory performance standards	Ops, T&G, O&M Dist, CSD, Technical	O&M Dist	Hours/Numbers	Over Specified Limit of NEPRA					To comply with NEPRA's specified standards		
	1.3 Improve collections to 100%	CSD, Ops, MIS, O&M Dist	CSD	%age billed amount excluding subsidy	88%	91.0%	92.5%	94.0%	92.4%	93.4%		
	1.4 Eliminate fatal & non-fatal accidents	Ops, O&M Dist, MM, HR, Dev, T&G	Operations	No of accidents	in double figures per year	Substational Reduction	Eliminate	Eliminate	Eliminate	Eliminate	DD Safety	DIIP_ Lineman Safety Plan
2.0 Improve Customer Care and Service	2.1.1 "Soft area" Reduction in billing complaints to less than 1%	Ops, CSD, O&M Dist	CSD	%age of total consumers	More than 10%	Reduction	Reduction	Reduction	<1%	<1%	CSD and his team	DIIP- Commercial Improvement Plan(CIP)
	2.1.2 "Hard area" Reduction in billing complaints to less than 5%	Ops, CSD, O&M Dist	CSD	%age of total consumers	More than 10%	Reduction	Reduction	Reduction	<25%	<10%		
	2.2 Minimize New Connections installation duration	Ops, O&M, Dist, CSD, MM	CSD	No of days	NERPA's guidelines not complied with			To comply with NEPRA's specified standards				
	2.3 Minimize Reconnection installation duration	Ops, O&M, Dist, CSD, MM	CSD	No of days	NERPA's guidelines not complied with			To comply with NEPRA's specified standards				
	2.4 Minimize the redressal time for supply complaints	Ops, MIS, CSD, O&M Dist	MIS	Hours	NERPA's guidelines not complied with			To comply with NEPRA's specified standards				

Strategic Goals	Strategic Objectives	Cordinating Directorate(s)	Leading Directorate	Tareget Measurement	Measurement 2019-20	Final Year Objective 2020-21 to 2024-25					Project Manager	Supporting Plan
						2020-21	2021-22	2022-23	2023-24	2024-25		
3.0 Improve PESCO's Infrastructure	**3.1 Human-ware**											
	3.1.1 Start Training & capacity building initiatives	HR & All	HR		Legacy training	TNA, Training plans, CPD					HRD and his team	Human Resources Improvement Plan (HRIP)
	3.1.2 Fulfill the basic requirement for needs to operate for field staff	HR, FIN, Ops, O&M Dist	HR		No comprehensive system in place	LM plan part of the overall DIIP						
	3.2 Orgaware											
	3.2.1 Org A&R review and implementation	HR & All	HR		Not fully implemented	Align org structure with business strategy					HRD and his team	Organizational Improvement Plan(OIP)
	3.2.2 Improve recruitment process	All	HR		Legacy Process	Needs Improvement						
	3.2.3 Conduct yardstick study for Human Resources	All	HR		Yardstick study is obsolete	Yardstick Study to be updated						
	3.2.4 Implement Performance based management system	PR, HR	HR		Legacy system with no implementation	1)Upgrade and implement the existing acelerated promotion policy and 2) Increments based on performance ratings of PER's						
	3.2.5 Improvement in office facilities/work environment	HR & All	HR		Limited/inadequate facilities	Needs Improvement						

Strategic Goals	Strategic Objectives	Cordinating Directorate(s)	Leading Directorate	Target Measurement	Measurement 2019-20	Final Year Objective 2020-21 to 2024-25					Project Manager	Supporting Plan
						2020-21	2021-22	2022-23	2023-24	2024-25		
3.0 Improve PESCO's Infrastructure	**3.3 Technoware**											
	3.3.1 AMI expansion	MIS, Ops, O&M Dist, CSD, P&T	CSD	% of Customers Covered with AMR	Project by PESCO is in process	AMR/AMI at all 11 KV feeders are installed both on incoming and outgoing. AMR/AMI at consumer level upto 10 kw load will be installed in next five years.					CSD	Commercial Improvement Plan (CIP)
	3.3.2 Expand HHU and meter correction	MIS, Ops, O&M Dist, CSD, P&T	CSD	% of Customers Covered with HHUs	Project by PESCO is in process.	"Soft area" 100% is completed. "Hard area" 50% will be cover in next five years.					CSD	Commercial Improvement Plan (CIP)
	3.3.3 Replace electromechanical meters with static meters (100%)	Ops, O&M Dist, CSD, P&F	CSD	% of Customers Covered with Static Meters	Project by PESCO is in process	100% electronic meters					CSD	Commercial Improvement Plan (CIP)
	3.3.4 P&E expansion to GIS Mapping	P&F, MIS, Ops, O&M Dist	P&T		Project by PESCO is in process	Fully implemented in PESCO					P&T	DHP
	3.4 Inforware											
	3.4.1 Implement ERP & its rollout	All	FIN		Project by PESCO is in process	Extension of the IT network to support ERP in all circles. (ERP Progress = 80%)					FD	Financial Management Improvement Plan (FMIP)
	3.4.2 Implement CIS & its rollout	CSD, MIS	CSD		Project by PESCO is in process	Extended to all circles					CSD	Commercial Improvement Plan (CIP)
	3.4.3 Expand intranet portal to PESCO	All	MIS		Deployment at H/Q level	Already deployed and will be improved further in next five years. .					MIS	Communication Improvement Plan (CIP)
	3.4.4 Improve communications through email	All	MIS		Paper based communication	Promote e communication culyure					DGIT	Internal comm Improvement Plan(ICIP)

Strategic Goals	Strategic Objectives	Cordinating Directorate(s)	Leading Directorate	Tareget Measurement	Measurement 2019-20	Final Year Objective 2020-21 to 2024-25					Project Manager	Supporting Plan
						2020-21	2021-22	2022-23	2023-24	2024-25		
4.0 Comply with applicable laws and regulation	4.1 Companies Ordinance 1984	FIN, Company Secetary	FIN			Study and Compliance Required					All	Create a Library, map all requirements and Make it part of Business Plan
	4.2 Code of Corporate Governance for Public Sector	FIN, Company Secetary	FIN									
	4.3 Income Tax Ordinance	Legal, FIN, CSD, MIS	FIN									
	4.4 Sales Tax Act	Legal, FIN, CSD, MIS	FIN									
	4.5 Electricity Act & rules	Legal, CSD	CSD									
	4.6 Theft Ordinance CPC	Ops, Legal	CSD									
	4.7 Industrial Relations	HR, Legal	HR									
	4.8 Other labor laws	HR, Legal	HR									
	4.9 PPRA Rules	Dev, P&E	P&E									
	4.10 Distribution Licence	Ops, T&G, P&E, Dev, CSD, FIN	FIN									
	4.11 NEPRA Act & Rules	All	FIN									
	4.12 Compliance with	Dev	Dev									
	4.13 Power Sale Agreement with CPPA	Legal, FIN, CSD, T&G	FIN									
5.0 Make PESCO a socially responsible corporate entity	5.3 Campaign for energy conservation	P&E, PR	PR	No of Campaigns	Limited Campaigns	DISCO's wide					Communication Head	Stakeholders Communication Plan

ANNEX-2

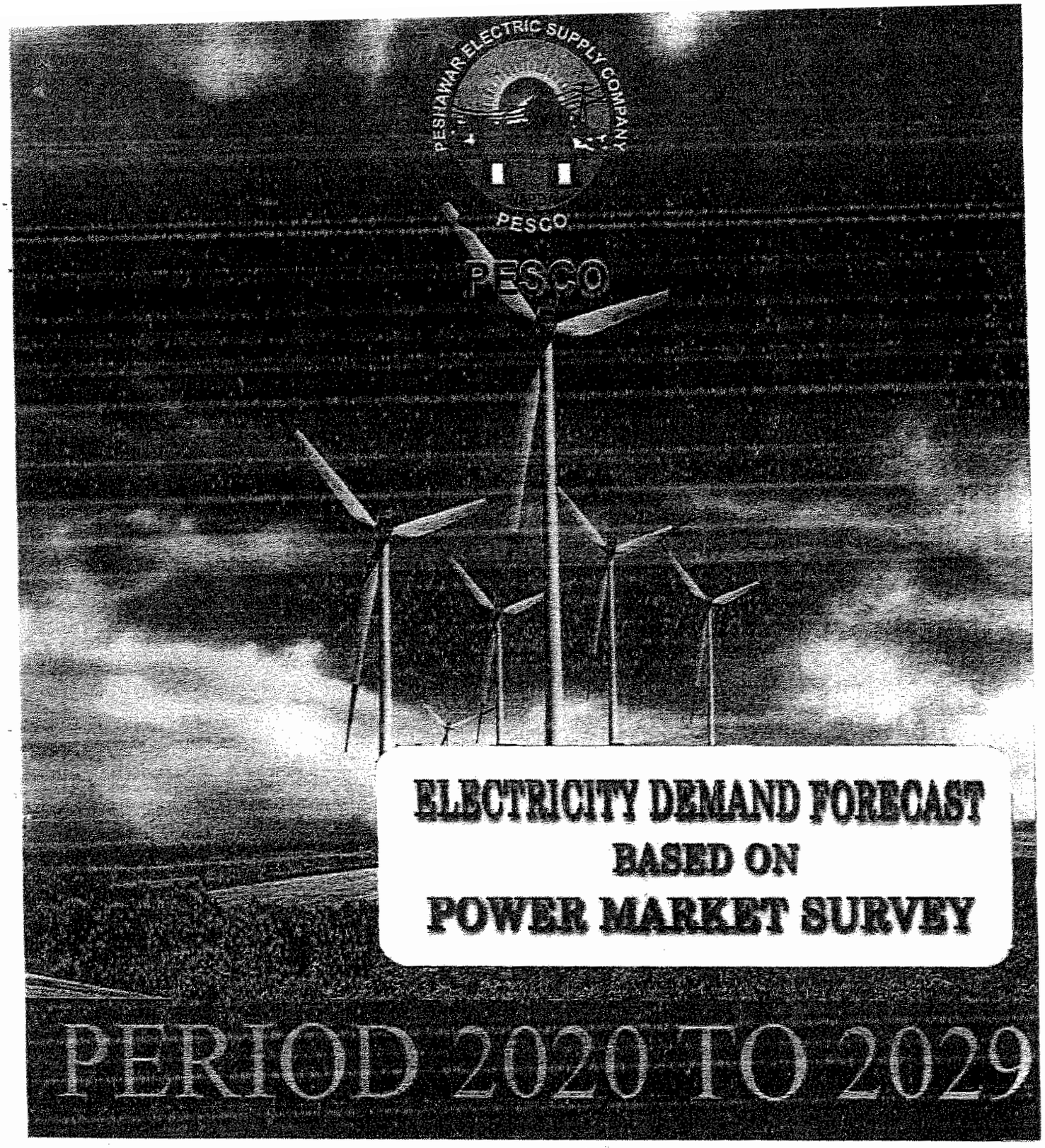

ELECTRICITY DEMAND FORECAST BASED ON POWER MARKET SURVEY

PERIOD 2020 TO 2029

PREPARED BY PESCO
WITH FACILITATION FROM
NTDC & CPPA

March 2021

Acknowledgement

The following officers/officials of PESCO developed this Medium Term Energy and Demand Forecast report.

- Mr. Abdullah (Assistant Director,PESCO)
  Email:abdullahkha100@gmail.com
- Mr. Ali Raza (Assistant Director,PESCO)
  Email:sdoaliraza@yahoo.com
- Mr. Khalil Ullah (LS-I,PESCO)

On the eve of publishing of this report we would like to express our sincere gratitude to CPPA-G Load Forecast Consultants, Engr. Bilal Ahmed and Engr. Farhan Hussan Javed, and NTDC Load Forecast Team comprising Engr. Tauseef ur Rehman Khan – Deputy Manager Load Forecast and Mr. Shahid Abbas – Staff Economist. Their contribution and expertise have been very instrumental and invaluable for the quality of this report. Their devotion and dedication to keep the forecast methodology at par with the best international industrial practices is highly commendable. We highly appreciate the efforts of Power System Planning, NTDC for initiating the forecast process every year and facilitating all DSICOs to ensure the timely completion of the report.

PMS Team
PESCO

Executive Summary

Peshawar Electric Supply Company (PESCO) is supplying power to civil divisions of Peshawar, Mardan, Kohat, Bannu, Dera Ismail Khan, Malakand, Hazara and their respective districts. This company came into existence in the year 2001 after unbundling of WAPDA system. Earlier it was known as Peshawar Area Electricity Board (AEB) in the year 2001, its distribution network comprised of fifty-nine 132 kV, thirty-two 66 kV sub-stations. In 2018-19, PESCO operates seventy seven (77) 132 kV, ten (10) 66 kV and three (03) 33 kV sub-stations.

This forecast is developed by conducting Power Market Survey (PMS), where the bottom up approach is applied considering the best international practices for the development of ten years forecast which is called Medium-term Load Forecast with facilitation from National Transmission and Despatch Company (NTDC) and Central Power Purchasing Agency Guarantee Limited (CPPA-G). The year 2018-19 has been taken as the base year and the forecast horizon is ten years up to 2028-29. The base year sale data (consumer-category wise energy sale of each feeder) and the expected spot loads data at the locations of different sub-stations have been collected by PESCO Power Market Survey team besides Transmission & Distribution losses along with the loss reduction plans, historical category-wise sale and number of consumers. Data for the base year has also been adjusted for the estimated amount of un-served energy (load shedding) in order to have realistic figures of energy consumption. Furthermore, this report is updated on yearly basis, in order to capture any potential drastic change in consumer consumption pattern.

In the year 2018-19, peak demand of PESCO was 2,364 MW, energy sale was 9,074 GWh, and energy purchased was 14,427 GWh. In the total energy sale for the year 2018-19 the shares of domestic sector and industrial sector were 62% and 28% respectively. The total number of consumers in 2018-19 was 3.33 million, and number of consumers in various categories was 2.90 million in domestic, 0.34 million in commercial, 0.033 million in industrial sector and 0.023 million in agricultural sector.

Forecast results show that in the years 2023-24 and 2028-29 energy sale will be 15,521 GWh and 18,421 GWh, peak demand will be 3,879 MW and 4,728 MW, and energy purchased will be 25,061 GWh and 29,261 GWh respectively. For the period 2018-19 to 2028-29, annual average compound growth rate of energy sale, peak demand and energy purchased will be 3.70%, 3.67% and 3.69% respectively.

Process Map

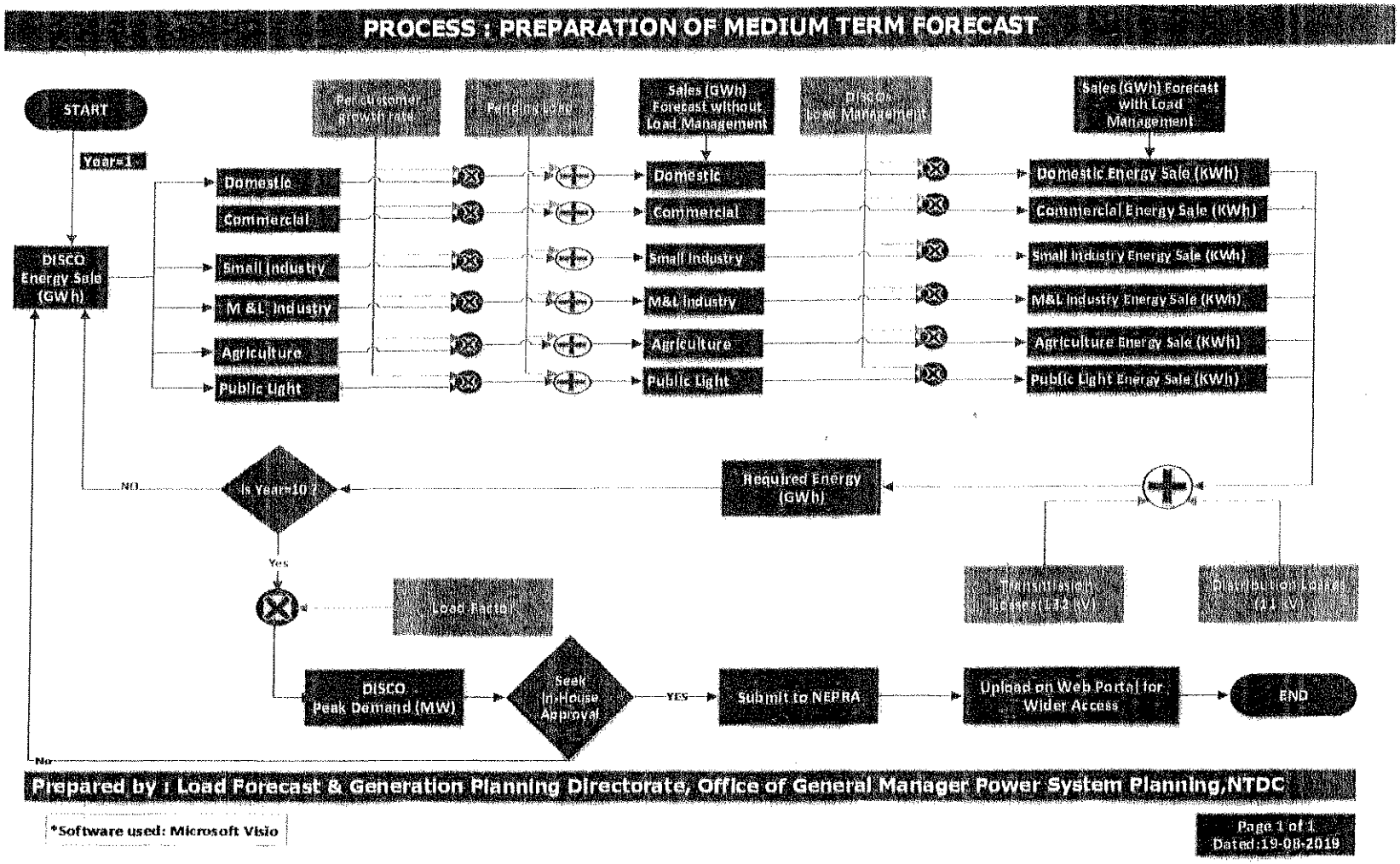

Prepared by : Load Forecast & Generation Planning Directorate, Office of General Manager Power System Planning,NTDC

*Software used: Microsoft Visio

Page 1 of 1
Dated:19-08-2019

Table of Contents

Acknowledgement i
Executive Summary ii
Process Map iii

1 Introduction 1

2 Historical Supply and Demand Analysis 3
2.1 Category-wise Sale 3
2.2 Transmission and Distribution Losses 5
2.3 Recorded and Computed Peak Demand 5
2.4 Number of Consumers 6

3 Power Market Survey Methodology 8
3.1 Overview 8
3.2 Survey Base Data 8
3.3 Input Parameters 9
3.3.1 Growth Rates 9
3.3.2 Losses 9
3.3.3 Load Factors 10
3.3.4 Coincidence Factors 10
3.3.5 Load Shedding 11
3.4 Forecast Calculations 11
3.5 Energy Calculations 11
3.6 Peak Demand Calculations 12
3.7 Accumulations 12

4 PMS Forecast Results 13
4.1 Recorded Forecast & Computed Forecast 13
4.2 Category-wise Forecasted Energy Sale (GWh) 14
4.3 Category wise Forecasted Demand (MW) 17
4.4 Civil Administrative Area Forecast 17
4.5 Monthly Demand (MW) and Energy (GWh) Purchase Projections 17
4.6 List of Overloaded Substations 17
4.7 List of Grids with their Codes and MVA Capacities 17
4.8 Peak Demand of Substations 17
4.9 Peak Demands of existing, transit and proposed grids (Family of Grids) 18
4.10 Per Capita Consumption 18
4.11 Category-wise Energy and Maximum Demand Projections for each Substation 19

Disclaimer 96

1 Introduction

This report is the 28th issue of Power Market Survey forecast and is prepared by PESCO by getting assistance of NTDC & CPPA-G. This forecast was previously published by Planning Power NTDCL and the current report is the first issue which is prepared by PESCO by getting assistance from CPPA. The report consists of year wise detailed forecast of energy sale and power demand for the whole company and each sub-station within the company's distribution network. In addition, forecast for Civil Administrative areas such as Divisions and Districts served by the company's distribution network is also computed and depicted in different tables. The forecasted peak demand of PESCO has been graphically presented in **Figure 1-1**.

Load forecasting is an important element of the power planning process involving prediction of energy and demand in the future. The forecast serves as the basis for demand and supply-side planning. Load forecasts are typically prepared by utilities for different time frames and the level of details required depends upon different planning applications and operations for which the forecast will be used.

Long term planning requires a system level forecast of total generation requirement and peak demand. On the other hand, transmission and distribution planning requires more load level and geographic details to assess location, timing and loading of individual lines, substations and transformation facilities. The following figure (**Figure 1-1**) shows the computed peak demand of PESCO for the current forecast period.

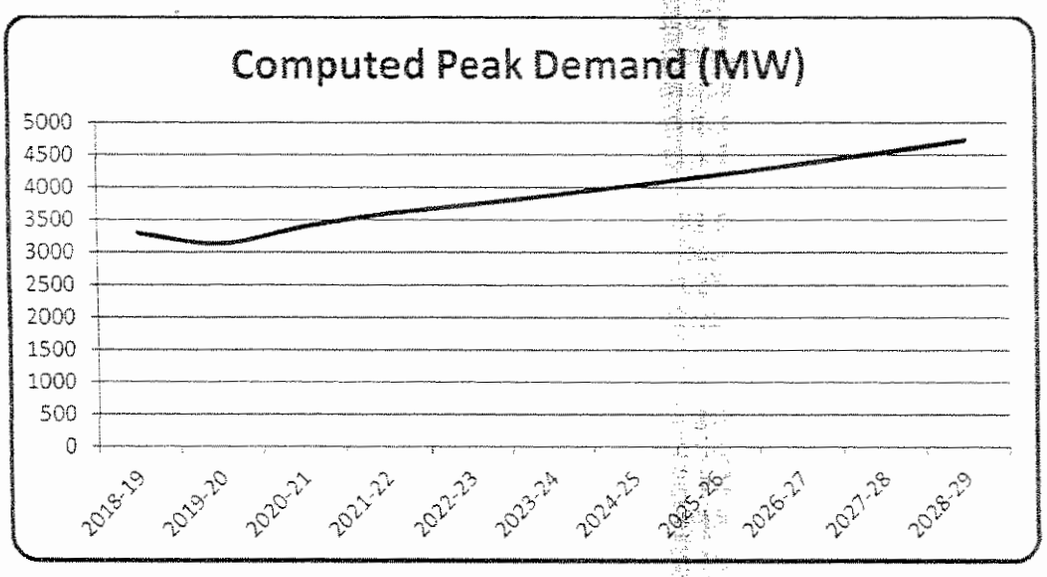

Figure 1-1: Computed Peak Demand Forecast

Forecasting models fall into the following three general categories:

- Trend models
- Econometric based models
- End-use models

Trend forecasts graphically or mathematically extrapolate past electricity demand trends into the future. They may be inadequate for short time periods where demographic changes in the underlying casual factors of load growth are not anticipated. Econometric models represent a more complex 'top-down' approach to forecasting and these models rely on the observed or the implied

relationship between past energy consumption and other variables defining past economic output (likewise GDP data), demographics and price or income variables. End-use models relate energy use to the physical appliances stock levels and use patterns or industrial process. These end use models represent a 'bottom-up' forecasting approach and normally incorporate disaggregate end use forecast and consumer survey techniques.

This report has been prepared on the basis of Power Market Survey Methodology and the model used is called Power Market Survey (PMS) model. It uses bottom up approach. This model is a form of end use model which provides energy and power projections for all distribution companies and all grid stations within a company's distribution network.

The PMS model relies on an extensive data base of historical sales. The data base includes historical figures of consumption by consumer type (i.e. domestic, industrial and commercial etc.) of each feeder of a grid station and overall consumption from a grid station. Actual consumption data is adjusted for un-served demands attributed to load shedding.

Energy forecasts are computed for each consumption category at the sub area level on the basis of a trend analysis of recent per consumer sales plus new consumer connection applications. Industrial forecasts are based on interviews with existing consumers, trend projections and a review of the applications for request of new and increased service. These analyses are repeated for each sub area for each of the years to be forecasted. The annual peak demand is determined from the resulting energy forecasts by using the load factors and diversity factors developed for each consumer category. Forecasts are then aggregated to system level.

Because the PMS forecast is based on a mix of end-use, trend projection and known consumer expansion plans, it cannot be used reliably to predict demand over the longer term. This model had not been created to predict impacts of changes in growth of different economic sectors or consumers categories over time, or changes in both the absolute and relative prices of electricity, and of changes in the relationships between income growth and electricity growth over time as a result of market saturation and technological change (in order to capture these changes CPPA-G is using another model called regression model). Regression model is used for long term forecasting as the changes in growth are occurred due to change in technology, life style over a longer time period.

The Power Market Survey forecast model most closely approaches the requirements of power system planning. It provides the level of detail required for siting studies and transmission and substation planning as well as the sectoral details necessary to assess different sectors growth rates and their impacts on load shapes for the system, DISCOs and grid stations. In addition, it also provides a reasonable approximation of unconstrained load growth because it makes specific provision for load shedding i.e. suppressed demand.

2 Historical Supply and Demand Analysis

2.1 Category-wise Sale

The costumers within the company can be segregated in different categories. The segregation is usually based upon the type of applications for which electricity is being used. Major categories include Domestic, Commercial, Small industries, Medium & Large industries and Agriculture.

The category-wise sale (GWh) along with percentage for the years 2008-09, 2013-14 & 2018-19 are given in Figure 1-2.

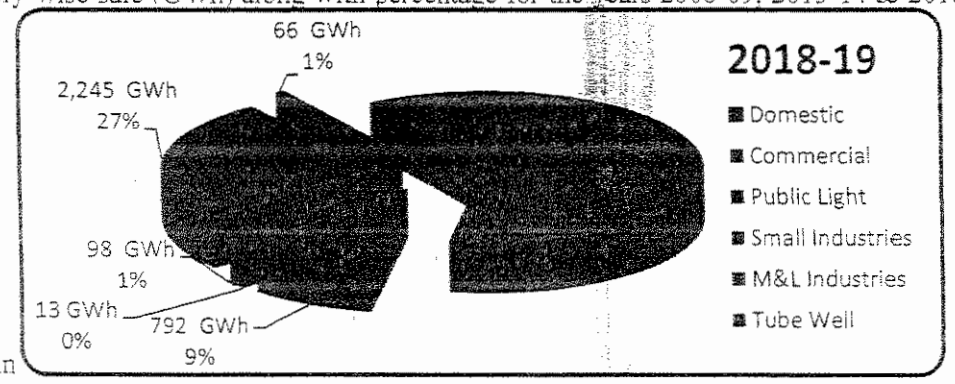

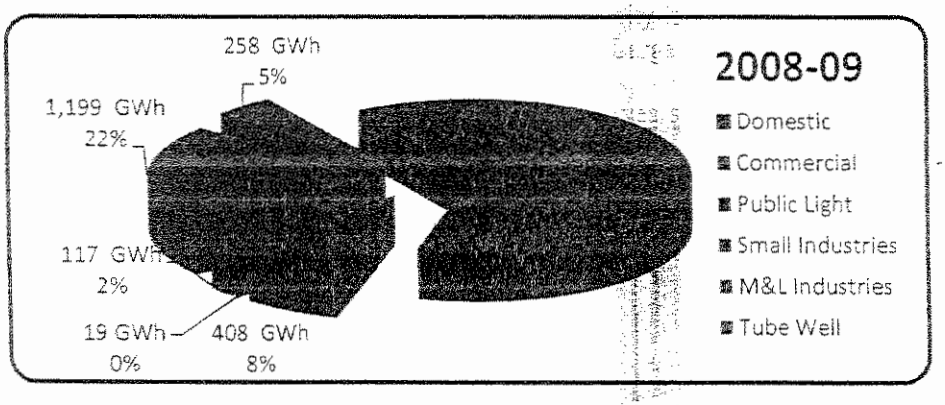

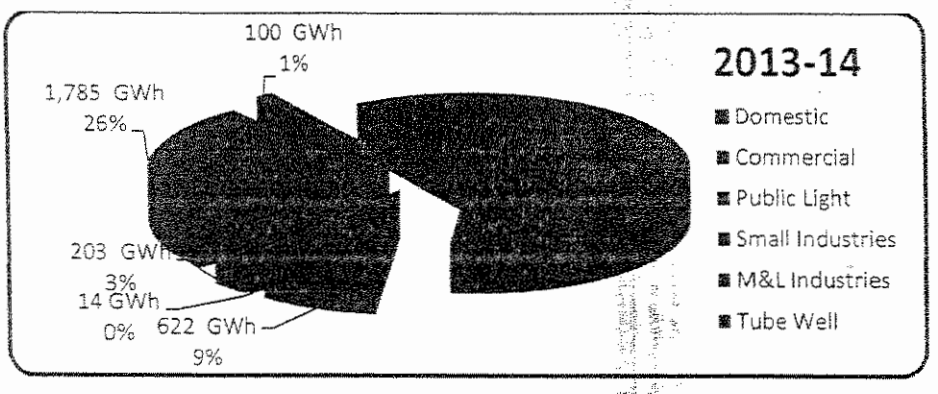

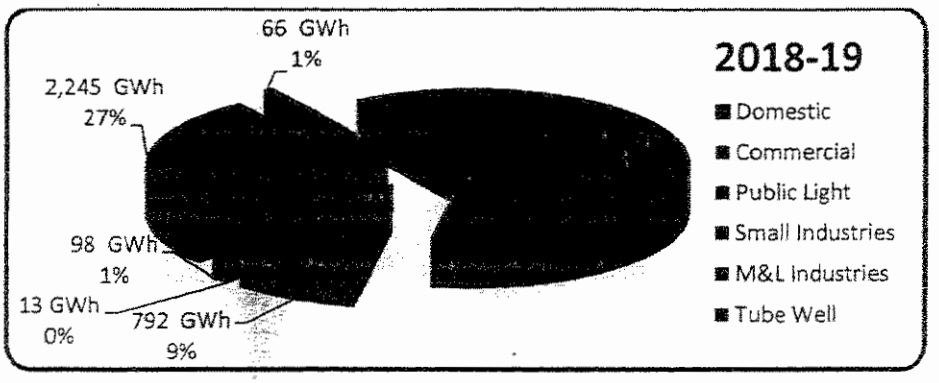

Figure 1-2: Historical Category-wise Sale

Figures of category-wise sale for the last five years i.e. 2014-15 to 2018-19 are given in the table below.

Table 2.1-1: Historical Sale of PESCO

Financial Year	Domestic (GWh)	Commercial (GWh)	Public Light (GWh)	Small Industries (GWh)	M&L Industries (GWh)	Tube Well (GWh)	Bulk (GWh)	Total (GWh)
2015	4299	654	14	203	1816	93	519.51	7598.9
2016	4484	703	13	203	1752	82	544.92	7782.9
2017	4885	739	13	206	1926	83	580	8432
2018	4969	770	13	205	2117	79	642.49	8795.4
2019	5191	792	13	98	2245	67	668	9074
Ave. Growth (2015-2019)	4.8%	2.8%	-2.1%	-16.7%	5.4%	-7.9%	6.5%	4.5%

2.2 Transmission and Distribution Losses

In PESCO's system, losses are divided into two types;

- Transmission Losses
- Distribution Losses

The losses of 132 kV transmission lines are considered as Transmission Losses whereas the losses of 11 kV and 440 Volts lines supplying the consumers are called Distribution Losses. In a system, generally the high losses are due to lack of proper maintenance and element of theft. Reduction in losses can be achieved through installation of properly sized conductors in 11kV feeders and low tension lines. Installation of capacitor banks to reduce reactive power and thereby improving power factor is also and effective method to reduce line losses. The breakup of energy sent out is shown as Sale, Distribution Losses and Transmission Losses with their percentages in **Figure 1-3** for the year 2016-17, 2017-18 and 2018-19.

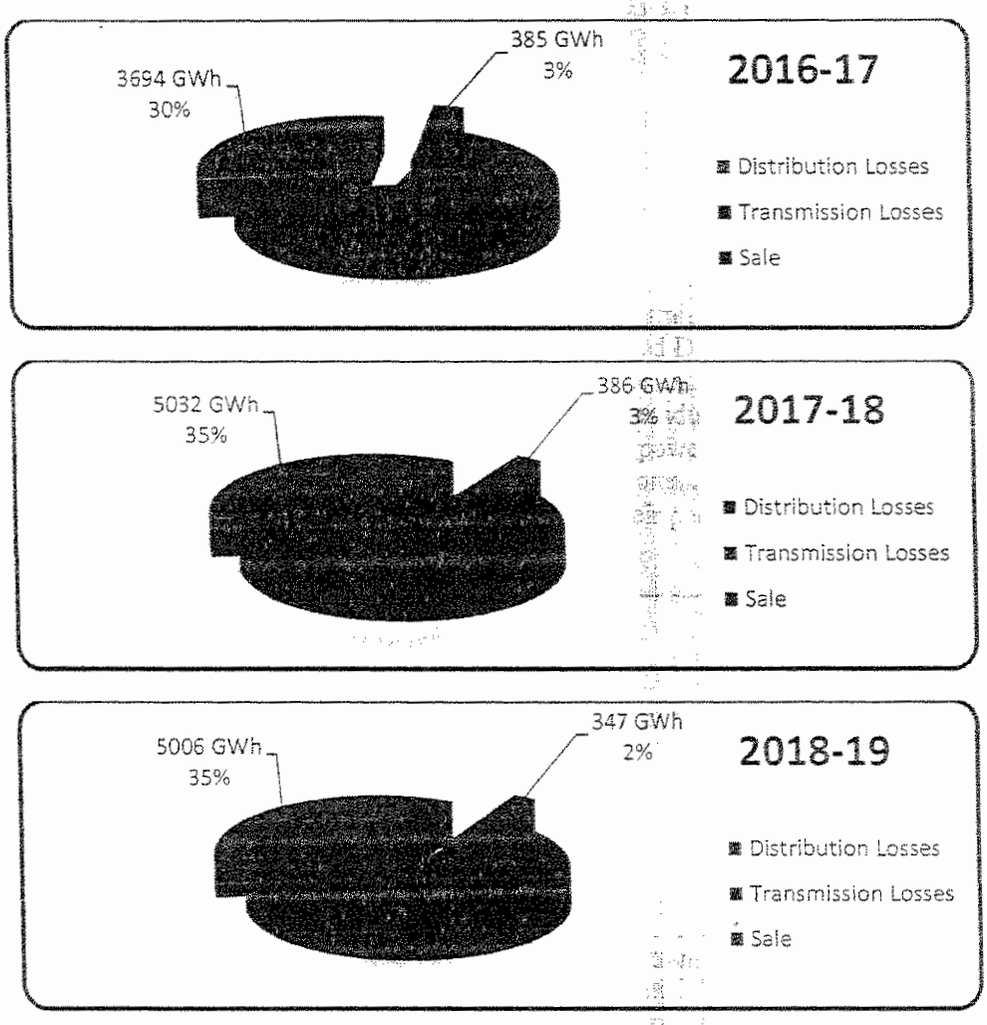

Figure 1-3: Historical Energy Sale and Losses (Transmission and Distribution) with their percentages

2.3 Recorded and Computed Peak Demand

Recorded peak demand is the highest electricity demand or maximum power supplied to the consumers during the base year. Computed peak demand is calculated from the recorded peak demand by adding the element of unserved power to the values of recorded peak demand. **Figure 1-4** shows the recorded and computed peak demands (MW) from the year 2014-15 to 2018-19.

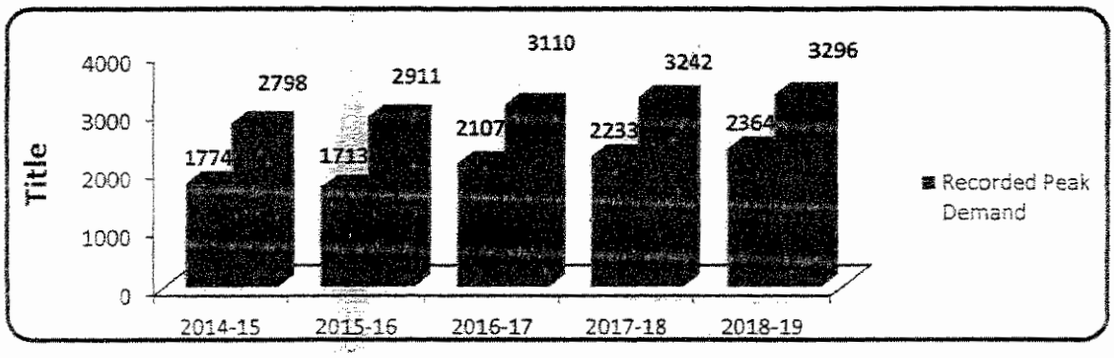

Figure 1-4: Historical Recorded and Computed Peak Demands

Historical figures of recorded and computed peak, energy sale and purchase, losses and load factors for PESCO are given in the following table.

Table 2.3-1: Historical Peak Demand, Energy Sale & Purchase, Losses and Load Factor

Year	Energy Sale	Energy Purchase	Losses 11 KV	Losses 132 KV	Computed Energy Purchased	Recorded Peak	Computed Peak	Rec. Load Factor	Comp. Load Factor
	GWh	GWh	GWh	GWh	GWh	MW	MW	%	%
2015	7599	11654	3679	376	17994.8	1774	2798	75	73
2016	7783	11750	3536	431	19068.3	1713	2911	78	75
2017	8432	12511	3694	385	19996.1	2107	3110	68	73
2018	8796	14213	5032	386	20529.3	2233	3242	73	72
2019	9074	14427	5006	347	20639	2422	3377	68	70
Growth Rate	4.5%	5.5%			3.5%	8.1%	4.8%		

2.4 Number of Consumers

Historical figures of number of consumers within PESCO's jurisdiction for the last five years are given in

Figure 1-5. These figures show the total number of consumers in all consumer categories; i.e. Domestic, Commercial, Small industries, Medium & Large industries, Public Lighting, Bulk and Agriculture.

Figure 1-5 shows a regular increase in the number of customers each year.

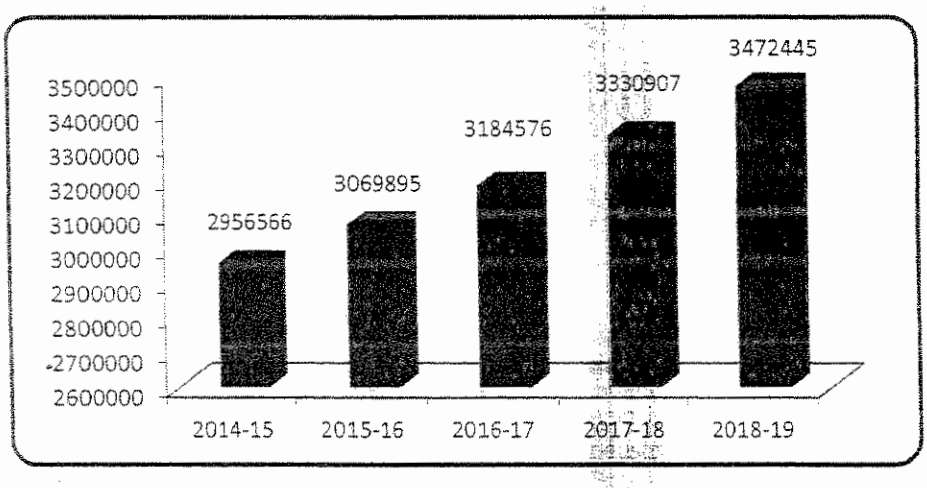

Figure 1-5: **Number of Consumers**

Category-wise number of consumers for the last five years i.e. 2014-15 to 2018-19 is shown in the following table.

Table 2.4-1: Historical Number of Consumers in PESCO

Year	Domestic	Commercial	Public Light	Small Industries	M&L Industries	Tube Well	Bulk	Total
2015	2602227	298739	1040	24623	5721	23328	888	2956566
2016	2703453	309919	1057	25003	6201	23371	891	3069895
2017	2805470	321802	1088	25410	6613	23289	904	3184576
2018	2938544	337386	1096	23250	6623	23083	925	3330907
2019	3071012	349985	1083	20522	6060	22896	887	3472445
Ave. Growth (2014-2019)	4.2%	4%	1 %	-4.5%	1.4%	-0.5%	0 %	4.1%

3 Power Market Survey Methodology

3.1 Overview

The Power Market Survey Model forms the basis of the Medium Term Forecast. It produces energy and peak demand forecast for each consumer category and grid station for the entire service area over a period of ten years. The model has three inter-related components: the main database, the basic input parameters and the calculations.

A huge energy consumption database has been developed through the Power Market Survey. The database contains base year consumption data for existing consumers and ten years' forecast data for new consumers for each consumer category within the company. In addition, there is separate information for peak demand in medium & large industries and traction categories. Because of its huge volume, this data is not listed as part of the report.

In addition to the database, a number of basic input parameters are separately prepared for each DISCO which forms an integral part of the forecast model. These include:

- **Growth Rates:** The annual increase in consumption per consumer by consumer category
- **Loss Rates:** Transmission and Distribution Losses expressed as a percentage of energy purchased and energy sold, respectively
- **Load Factors:** It expresses the ratio of the amount of energy actually generated to the amount that would have been generated, had the peak demand been continued over the entire period.
- **Coincidence Factors:** Describing the load diversity within the system.

The forecast calculations within the model combine the energy consumption data and the input parameters to compute the energy and peak demand requirements within each area for each year to be forecasted. The basic data unit is an area. The data is accumulated from the area basis to grid stations, then to DISCOs and ultimately combined to produce a forecast for the entire system.

A detailed discussion of each of the three model components is given below.

3.2 Survey Base Data

An extensive database has been developed on gross consumption by consumer category such as household (domestic), commercial, small industrial, large industrial, tube wells (agriculture), public lighting, and traction (electric rail). Energy consumption figures come from consumer service meter readings. Maximum demand readings and load factors for large industrial consumers and other demand-metered consumers are based on service meter readings. The consumption data is collected from Computer Centers of each DISCO (It is category-wise consumption data of each feeder). The database also contains data regarding un-served demands attributed to load shedding.

The basic geographic unit represented within the database is called an area, although many areas are divided into two or more subareas. This occurs when portions of the area are served by different feeders or where a single feeder services different administrative district. Each area is assigned a series of codes which identify the technical boundaries associated with the area.

The technical boundaries, which are emphasized in this report, start at the grid station. Thus, all areas and subareas are assigned to one of the sub-stations in each DISCO. These are distribution

grid stations supplying power at 11 kV after transformation from a 132kV or 66 kV source. Grid stations are combined to form a DISCO.

There can be up to eleven records in the data base for each area or subarea, one record for each year of forecast. The first year is typically year zero and records the base year level of consumption for each consumer category. The remaining records for the area list the incremental consumption associated with new consumers to be added to the area within the specified year.

This incremental consumption is based on applications for new or extended service which are filed at each revenue office and from discussions with the relevant industries and government agencies. Incremental industrial consumption is based on a combination of interviews, trend projections, and reviews of applications for new and/or increased service. Interviews are held with major industrial consumers to identify their current capacity utilization and any long-term plans they have for future expansion or changes in their electricity consumption. In addition, the various branches of the Ministry of Industries are interviewed to determine the number of applications received for new developments or plant expansions and the anticipated electrical load associated with each development or expansion. These anticipated new demands are added to the basic forecast of industrial consumption.

Extension of electricity to new areas over the forecast period is dealt with separately. The number of new communities to be electrified is also obtained. Initial loads and load growths are calculated based on past experience in terms of market penetration and consumption per consumer in newly electrified communities. This analysis is conducted at DISCO level.

There are over 10,000 area/subarea/year records in the data base.

3.3 Input Parameters

A number of input parameters are defined in order to use these in the Power Market Survey model. These parameters are:

- Transmission and Distribution Loss Rates
- The Growth Rates in consumption per consumer for each category
- Load Factors for each consumer category
- Coincidence or Diversity Factors
- Load Shedding or Unserved Energy

The definition and basic derivation of each parameter is discussed below.

3.3.1 Growth Rates

The forecast calculations, as will be discussed below, use per consumer growth rates to update the previous year's consumption before adding the incremental consumption estimate for the current year. The Power Market Survey model requires per consumer growth rates to be specified by DISCO for each consumer category (domestic, commercial, etc.). The rates selected for the forecast are based on average annual compound growth rates, calculated from the last five years data of each consumer category in each DISCO.

3.3.2 Losses

For every 100 units of electricity purchased from a power station only 75 to 85 units are actually sold to the ultimate end-user. The remaining units are consumed by the power system itself during transmission and distribution of the sold energy. The transmission and distribution losses must be

added to the sales forecast in order to determine the total generation requirement for the system. An additional source of "loss" is the consumption in auxiliaries (also called station service) used by the power plants in the process of generating electricity. Auxiliary consumption cannot be avoided and is totally dependent on the type of generation. For example, a thermal plant would have a higher auxiliary consumption than a hydro plant to account for the energy consumed by fuel and waste handling systems. Auxiliary losses are determined and incorporated in the forecast outside the model. However, presently as the power is purchased at the bus bar level so the energy consumption in auxiliary is not calculated.

The Power Market Survey model handles Distribution and Transmission losses in such a manner that Distribution losses are expressed as a percentage of Sales and Transmission losses are expressed as a percentage of the energy purchased from the generating stations. The model is capable of handling different loss rates of each year for each DISCO. The Distribution and Transmission losses used in the Power Market Survey Model are based on the review of current loss rates and an evaluation of existing loss reduction initiatives within the Distribution Network of the DISCO. The proposed losses (Distribution losses at 11kV and Transmission losses at 132 kV) are applied DISCO-wise. Previously a separate excel sheet was used outside the model to calculate the loss rates needed for the model. Now a separate module has been incorporated in the model to adjust 132 kV and 11 kV received and sale of a DISCO. This model simulates sale, Distribution losses and Transmission losses of a DISCO. It also includes the loss reduction program.

3.3.3 Load Factors

Energy sale in each consumer category is converted to peak power demand through the use of a load factor. It expresses the ratio of the amount of energy actually generated to the amount that would have been generated, had the peak demand been continued over the entire period. Load factors can be calculated over any time period but the most common are daily, weekly and annual.

The load factors utilized in the Power Market Survey Model relate annual energy sales to peak capacity for each consumer category (domestic, commercial, public lighting, small industries and private tube wells). Input load factors are not required for medium/large industry, public tube well and traction sales as consumption for these sectors is provided through the survey in both energy and power terms.

Maximum demand readings are available directly for large industrial and other demand metered consumers such as public tube wells. Load factors for non-demand metered consumers are determined on a sample basis. For example, peak demand is based on maximum demand readings from substation feeders which are identified as serving predominantly one sector.

Domestic and commercial load factors are differentiated by community size (village, town or city). Whereas a single load factor is used for small industrial, private tube wells, public lighting and traction because of the similar nature in the operation of these loads.

3.3.4 Coincidence Factors

The total energy demand of a number of individual consumers is determined as the simple sum of their individual energy consumption values. The total peak load, however, is calculated as the diversified sum of their individual peak load levels. The coincidence factor, as its name implies, is a general term which measures the coincidence between the peak loads of any number of individual consumers or consumer groups over a specified time period in order to compute a combined peak. Mathematically, it is the inverse of the diversity factor.

The daily coincidence factor is determined by comparing the daily load patterns of each consumer or group under consideration. In this case, the sum of the individual hourly (or 15-minute) peaks would determine the overall daily load pattern and the overall peak load. Suppose one consumer (or group) consumes energy only in the morning and a second consumer (or group) consumes energy only in the evening, the coincidence factor between these two consumers would be zero and the peak load of the combined group would be the peak of the larger consumer. Conversely, if both groups consumed all energy at the same hour, the coincidence factor would be one and the combined peak would be the sum of the two peaks. In practice, the coincidence factor is found between these two extremes.

Coincidence factors can be determined between any group and sub-group of consumers whether it is domestic versus commercial or Lahore versus Islamabad, provided that reasonable estimates of the appropriate load patterns are available. Typically, these patterns are not readily available and must be synthesized from incomplete or estimated data. In addition, all coincidence factors calculated from these load patterns are approximations of the corresponding instantaneous peak faced by the system. In fact, a common practice is to define this instantaneous peak as the bench mark and specify all coincidence factors in relation to this peak and time. The advantage of this approach is that all peak can be easily converted into their contribution to the overall system peak, the disadvantage is that the relationship between any two groups cannot be so clearly specified and will likely be incorrectly specified.

The Power Market Survey Model depends upon specified coincidence factors between consumption categories and between consumption areas in the aggregation of peak loads from consumers to the peaks at grid stations and at DISCO level and at the level of overall system peak. The coincidence factors estimated for the medium term model have been based on the limited available System records of the peak loads at various points in their respective systems.

3.3.5 Load Shedding

Actual consumption data is also adjusted for un-served demands attributed to load shedding and to voluntary restraint by consumers (e.g. an industrial consumer who agrees to close his plant or switch to captive generation during peak hours). The load shedding data is collected from National Power Control Center (NPCC) of NTDC and also from the Power Dispatch Centres of each DISCO. Now a days, all the load shedding is managed by each DISCO at its 11 kV level.

3.4 Forecast Calculations

The forecast calculations involve three basic steps. Firstly, an energy forecast is determined at the area (or subarea) level using per consumer growth rates and incremental consumption estimates from the data base. This is then converted to a peak demand forecast, again at the area (or subarea) level using the input load and diversity factors. Then transmission and distribution losses are added and final step is to accumulate the areas into their corresponding grid stations, and grid stations into their DISCO and finally all DISCOs to form the system.

3.5 Energy Calculations

The basic calculation unit is the area or subarea where applicable. The database provides the base year energy consumption level for each of the six consumption categories (Domestic, Commercial, Public Lighting, Small Industry, Private Tube Wells and Medium & Large Industry). The database also includes the peak demand associated with the medium and large industry category. The domestic energy forecast for year 1 (the base year is indicated as year 0) is calculated by multiplying the base year consumption by the domestic per consumer growth rate to account for growth in the

intensity of use in the sector, and then incremental consumption listed in the database is added to account for new use in the sector. This process is repeated for the remaining five energy sectors (plus the medium and large industrial demand) for the entire forecast period (remaining 10 years). The total energy consumed in the subarea for each year of the forecast period is then computed.

3.6 Peak Demand Calculations

The annual energy sale values for each of the consumer category (domestic, commercial, public lighting, small industry and private tube well) are converted to peak demand using the load factors listed in the appropriate input parameter file and then adjusted to account for coincidence within the category. The annual peak demand for the subarea is computed as the sum of the individual category peaks multiplied by coincidence factors within the subarea. The sub area peak demands are accumulated to an area by applying proper coincidence factors.

3.7 Accumulations

The total energy and peak demand at a given grid station is calculated as the sum of all the areas and subareas in that grid station's service area plus an allowance for distribution losses. Peak demand estimates are accumulated, and different coincidence factors applied to city, town and village areas within the service area. The total energy and peak demand within a given DISCO is the sum of all grid stations in that DISCO plus traction and an allowance for transmission losses. Peak demands are again diversified in the accumulation, and the system totals are obtained from DISCO's total with some coincidence.

4 PMS Forecast Results

4.1 Recorded Forecast & Computed Forecast

The term 'Recorded Forecast' means the energy sale figures used in the forecast has not been adjusted for un-served energy (load shedding). Forecasted sale, growth rates, transmission and distribution losses, generation requirement and peak demand without incorporating load shedding has been shown in **Table 1-1**: Rationalized Forecast

Year	Sale	G.R	Distribution Losses		Energy Received at 11 kV	Peak Demand at 11 kV	Transmission Losses	
		(%)	(GWh)	(%)	GWh	MW	(GWh)	(%)
2018-19	9074		5006	35.6	14080	2364	347	2.41
2019-20	9043	-0.3	5433	37.5	14476	2182	315	2.13
2020-21	10062	11.3	5995	37.3	16058	2446	348	2.12
2021-22	10804	7.4	6383	37.1	17188	2643	371	2.11
2022-23	11282	4.4	6609	36.9	17891	2777	384	2.10
2023-24	12268	8.7	7125	36.7	19394	2928	415	2.09
2024-25	13273	8.2	7656	36.6	20929	3086	445	2.08
2025-26	14293	7.7	8173	36.4	22467	3251	476	2.07
2026-27	15306	7.1	8676	36.2	23982	3425	506	2.06
2027-28	16331	6.7	9175	36.0	25506	3609	535	2.05
2028-29	17386	6.5	9666	35.7	27052	3802	565	2.05
Ave. Growth (2019-2029)	6.72%				6.75%	4.87%		

Table 1-2. This forecast is also called the Low Forecast.

The term 'Computed Forecast' means the energy sale figures used in forecast have been adjusted for un-served energy (load shedding). Forecasted energy sale, growth rates, transmission and distribution losses, generation requirement and peak demand with incorporating load shedding has been shown in **Table 1-3.** Peak demand of this table has been demonstrated graphically in **Figure 1-6**. Similarly, energy sale and energy purchased also have been shown in **Figure 1-7**. The difference between energy purchased and energy sale shows all losses of the DISCO. This forecast is also called the Base Forecast. If there had not been the load shedding, the recorded forecast (Low Forecast) would have been the actual forecast i.e. the Base Forecast.

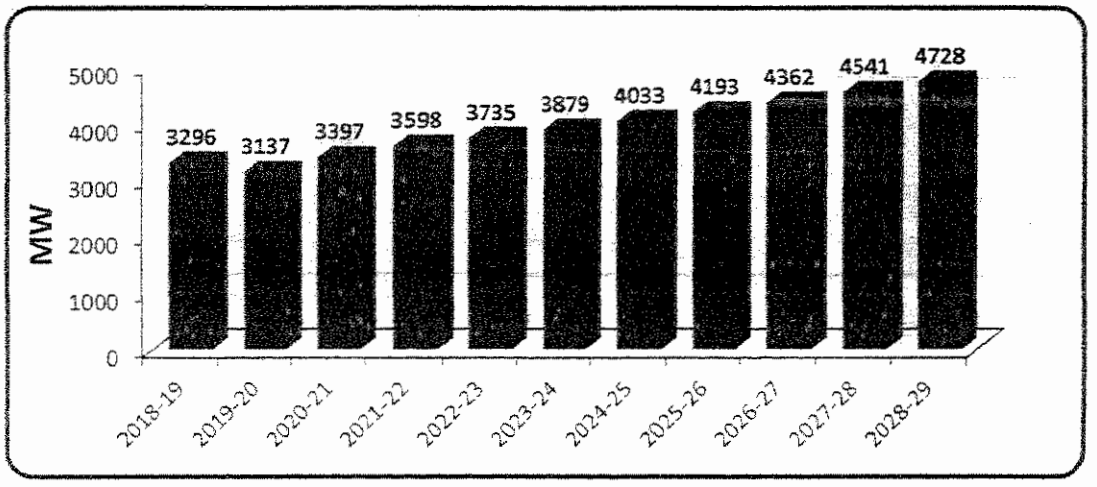

Figure 1-6: Computed Peak Demand

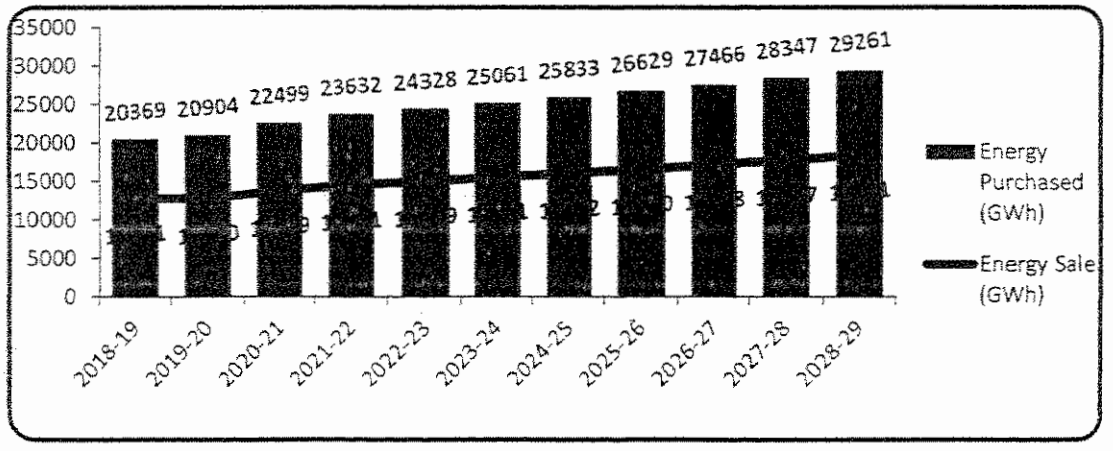

Figure 1-7: Energy Purchased Vs Energy Sale

4.2 Category-wise Forecasted Energy Sale (GWh)

Amount and percentage share of each consumer category in the total consumption for the year [illegible] lyze

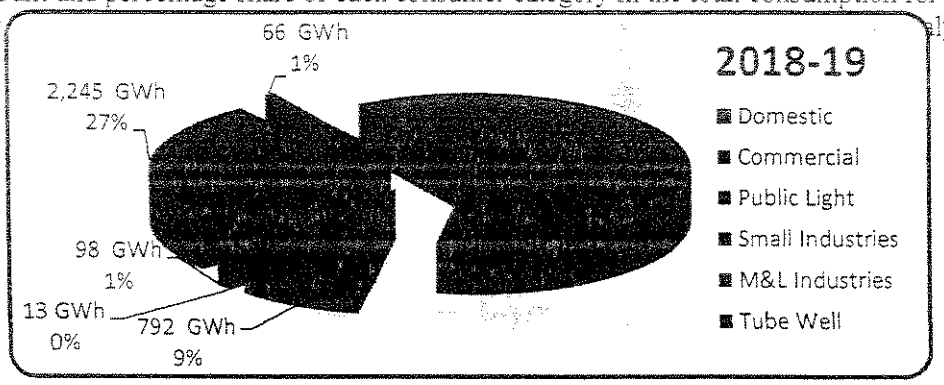

Figure 1-2 and **Figure 1-8**, it is evident that industrial sector has shown an increase from 24% to 28%, from year 2008-09 up to year 2018-19 and it will increase to 30% in 2028-29 which is a healthy sign for the country's growth.

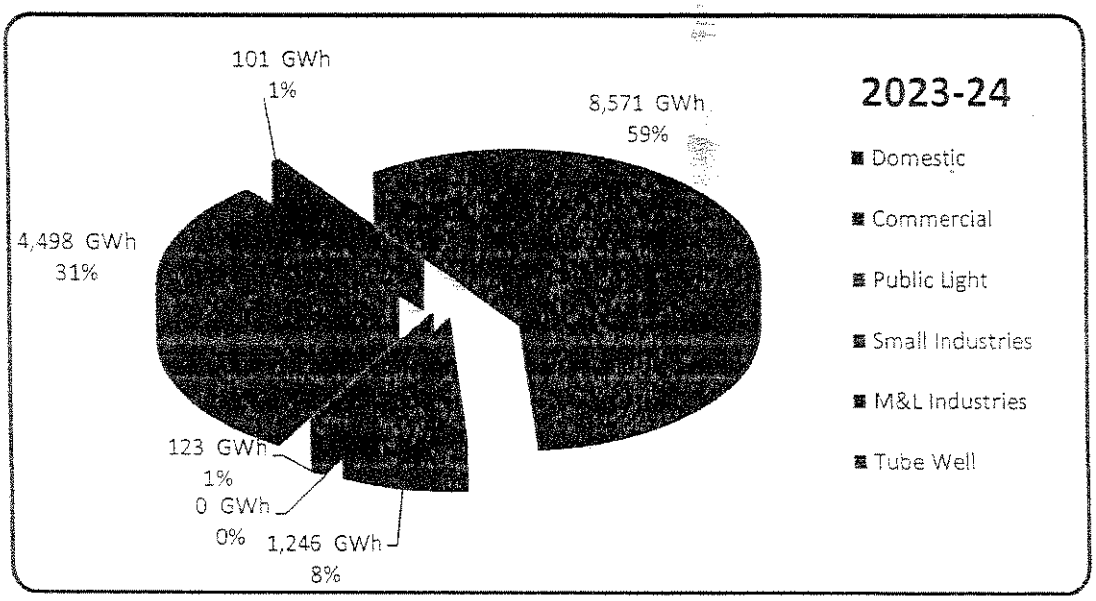

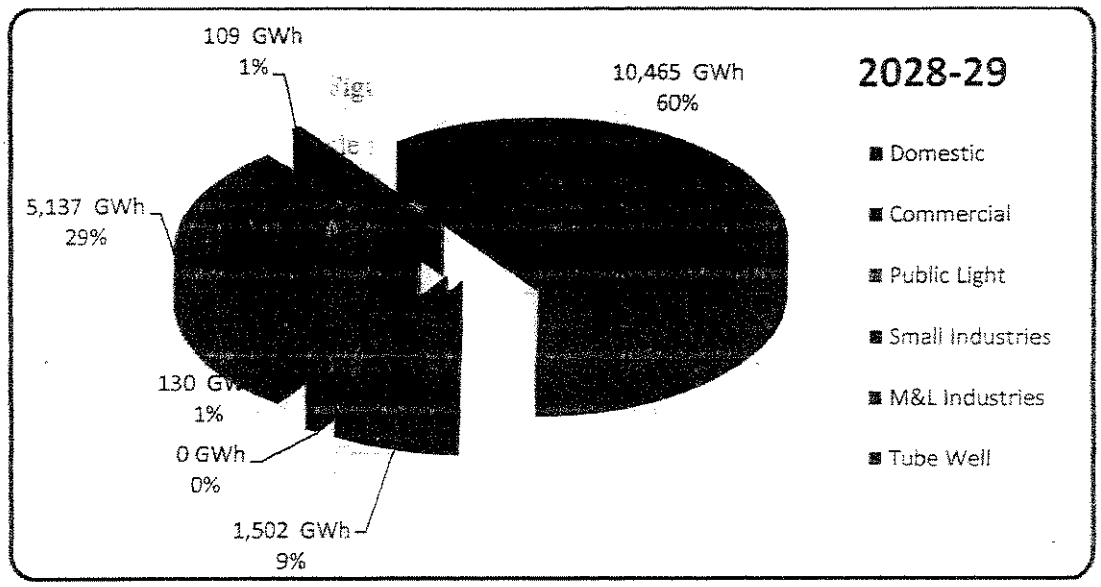

Figure 1-8: Forecasted Category Wise Sale

The category-wise forecasted sale incorporating load shedding effect (Low Forecast) is shown in **Table 1-4.** The category-wise forecasted sale with incorporating load shedding effect (Base Forecast) is shown in **Table 1-5.**

4.3 Category wise Forecasted Demand (MW)

The forecast of consumption (Demand) in MW without and with incorporating load shedding impact is shown in **Table 1-6** and **Table 1-7** respectively.

4.4 Civil Administrative Area Forecast

The PESCO service area comprises of seven administrative divisions i.e. Peshawar, Mardan, Kohat, Bannu, Dera Ismail Khan, Malakand, Hazara which comprises of 21 districts, Peshawar, Charsada, Nowsehra, Mardan, Sawabi, Kohat, Hangu, Karak, Bannu, Lakki, D.I Khan, Tank, Swat, Bunair, Upper Dir, Shangla, Malakand, Chitral , Lower Dir, Abbotabad, Haripur and Mansehra. The civil administrative Division-wise and District-wise energy and demand projections have been presented in **Table 1-8** to **Table 1-36**. The last column of the table contains peak demand.

4.5 Monthly Demand (MW) and Energy (GWh) Purchase Projections

The Month–wise demand (MW) and energy (GWh) purchase projections have been presented in **Table 1-37** and **Table 1-38**. To develop the projection, monthly demand and energy factors are computed for last five years and then its average is taken as a base factor for monthly demand and Energy projection. For this, each month peak is calculated from the ratio of the historical peak of that particular month to the annual historical peak of that year. Whereas each month Energy purchase is calculated from the ratio of historical monthly energy purchase of that particular month to annual energy purchase of that year. In this manner, historical ratios are calculated for each month of the last five years. The average of these values is taken as the monthly factor and multiplied with the peak demand of the year to obtain monthly peak demand and energy purchase.

4.6 List of Overloaded Substations

The list of overloaded substations will inform about that particular year in which a substation will be overloaded. The overloading criterion of a substation has been considered as 85% i.e. when any substation is 85% loaded, the remedial measures should be taken in the form of new substation or augmentation of the existing transformers. **Table 1-39** & **Table 1-40** show the lists of overloaded substations based on loading criterion of 85% and 100% respectively. Based on the loading criterion of 85%, the number of overloaded substations in year 2018-19 (base year) is fifteen (15). Two (02) and one (01) additional grids will be overloaded in years 2019-20 and 2020-21 respectively. In total, there would be 18 overloaded substations up to year 2020-21 with loading criterion of 85%.

4.7 List of Grids with their Codes and MVA Capacities

The list of substations in a DISCO mentioning number of transformers with MVA capacities at each substation is provided in the **Table 1-41.**

4.8 Peak Demand of Substations

A projection of peak demand at a substation is the most peculiar feature of this report. It is indeed a very rare and useful forecast. It provides the basis for transmission system expansion planning. It also provides a very solid ground for proposing a new substation or augmentation, extension and conversion of a sub-station. Only distribution losses have been considered in preparing the grid station peak demand forecast. The peak demand of each substation, existing as well as proposed, situated in the service area of the DISCO has been shown in the **Table 1-42.**The proposed

substations during the present period have also been incorporated in this table. The demand of the proposed substations is shown on the existing grids before the commissioning of proposed substation and it is shifted to the proposed substation after its commissioning year.

4.9 Peak Demands of existing, transit and proposed grids (Family of Grids)

This report also shows the projection of peak demands of existing substations as well as the demands that will be transferred to the proposed substation at when commissioned. This is also a very important forecast to accurately plan the capacity of the proposed substations as well as the status of the existing substation after the load is transferred to the proposed substation. It accurately forecast the demand in MW that will be transferred from one existing grid to the proposed grid and as well as the total load that will be transferred to the proposed grid. The peak demands of existing, transit and proposed grids are shown in Error! Reference source not found.. Transit grid is a new term introduced in the current issue of the report. It is a virtual or temporary substation with a particular name and number on which the necessary load from one overloaded substation is shifted temporarily during base year. In Error! Reference source not found., the proposed grids are shown with zero loads and the transit grid shows the estimated load that will be shifted from one existing substation to the proposed grid when it is commissioned. This table helps in finding out the amount of load in the future that will be shifted to the proposed grid from the existing grid when it is commissioned.

4.10 Per Capita Consumption

Per capita consumption is a very vivid indicator of development in a country. Usually developed countries have very high per capita consumption. Per capita consumption (kWh/person) for the year 2013-14, 2017-18, 2018-19, 2023-24 and 2028-29 is given in **Figure 1-9**.(The consumption for the years 2023-24, and 2028-29 are obtained from forecasted data.) . Population data is obtained from Pakistan Census 2016-17.

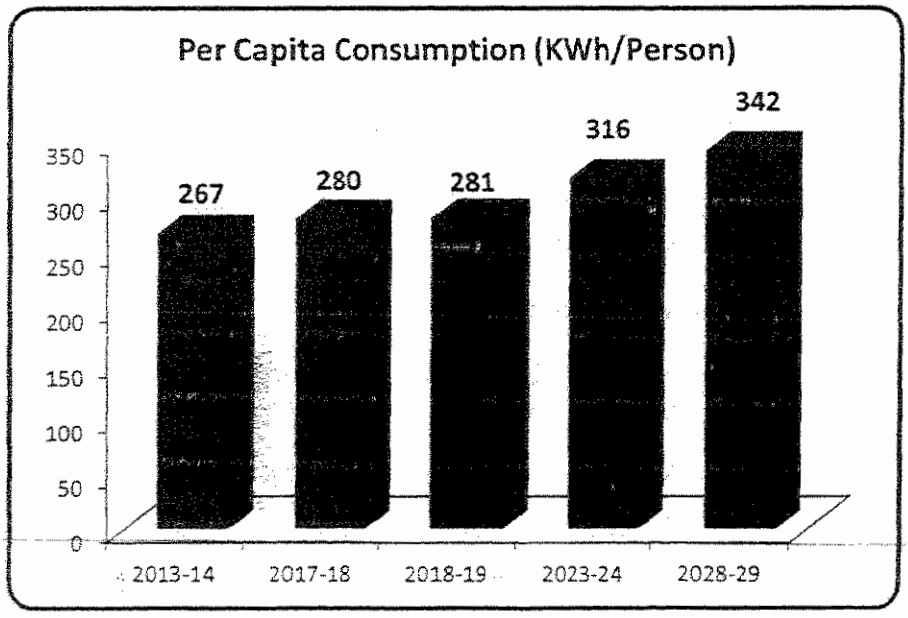

Figure 1-9: Per Capita Consumption

4.11 Category-wise Energy and Maximum Demand Projections for each Substation

The category-wise energy and maximum demand projections for each substation have been presented in

Table 1-43. The last two columns of the table contain power factor and reactive power values. The maximum demand for the DISCO in this table is the diversified sum of the individual peak demands of each substation and this figure will coincide with the peak demand of the respective year. In order to reduce the volume of the report, only the values 2023-24 have been presented in the table.

Table 1-1: Rationalized Forecast

Year	Sale	G.R	Distribution Losses		Energy Received at 11 kV	Peak Demand at 11 kV	Transmission Losses		Energy Sent out at 132 kV	Load Factor	Peak Demand at 132 kV	G.R
		(%)	(GWh)	(%)	GWh	MW	(GWh)	(%)	(GWh)	(%)	(MW)	(%)
2018-19	9074		5006	35.6	14080	2364	347	2.41	14427	68.0	2422	
2019-20	9043	-0.3	5433	37.5	14476	2182	315	2.13	14791	75.7	2230	-8.0
2020-21	10062	11.3	5995	37.3	16058	2446	348	2.12	16406	74.9	2499	12.1
2021-22	10804	7.4	6383	37.1	17188	2643	371	2.11	17559	74.2	2700	8.0
2022-23	11282	4.4	6609	36.9	17891	2777	384	2.10	18275	73.5	2837	5.1
2023-24	12268	8.7	7125	36.7	19394	2928	415	2.09	19809	75.6	2990	5.4
2024-25	13273	8.2	7656	36.6	20929	3086	445	2.08	21374	77.4	3151	5.4
2025-26	14293	7.7	8173	36.4	22467	3251	476	2.07	22942	78.9	3320	5.3
2026-27	15306	7.1	8676	36.2	23982	3425	506	2.06	24487	79.9	3497	5.3
2027-28	16331	6.7	9175	36.0	25506	3609	535	2.05	26041	80.7	3684	5.4
2028-29	17386	6.5	9666	35.7	27052	3802	565	2.05	27617	81.2	3881	5.3
Ave. Growth (2019-2029)	6.72%				6.75%	4.87%					4.83%	

Table 1-2: Forecast without incorporating Load Shedding effect (Low Forecast)

Year	Energy Sale		Distribution Losses		Energy Received at 11 kV GWh	Peak Demand at 11 kV MW	Transmission Losses		Energy Sent out	Load Factor	Peak Demand
	(GWh)	G.R (%)	(GWh)	(%)			(GWh)	(%)	(GWh)	(%)	(MW)
	9074		5006	35.6	14080	2364	347	2.41	14427	68.0	2422
	9043	-0.3	5433	37.5	14476	2182	315	2.13	14791	75.7	2230
	10062	11.3	5995	37.3	16058	2446	348	2.12	16406	74.9	2499
	10804	7.4	6383	37.1	17188	2643	371	2.11	17559	74.2	2700
	11282	4.4	6609	36.9	17891	2777	384	2.10	18275	73.5	2837
	11784	4.5	6844	36.7	18629	2920	398	2.09	19027	72.8	2982
	12305	4.4	7097	36.6	19402	3071	413	2.08	19815	72.1	3136
	12858	4.5	7349	36.4	20202	3228	428	2.07	20630	71.4	3297
	13431	4.5	7613	36.2	21043	3396	444	2.06	21487	70.7	3468
	14040	4.5	7888	36.0	21928	3574	460	2.05	22388	70.0	3649
	14684	4.6	8164	35.7	22848	3762	477	2.05	23325	69.3	3840
	4.93%				4.96%	4.76%			4.92%		4.72%

Table 1-3: Computed Forecast (Base Forecast)

Year	Energy Sale (GWh)	Energy Sale G.R (%)	Distribution Losses (GWh)	Distribution Losses (%)	Energy Received at 11 kV GWh	Peak Demand at 11 kV MW	Transmission Losses (GWh)	Transmission Losses (%)	Energy Sent out (GWh)	Load Factor (%)	Peak Demand (MW)	G.R %
2018-19	12811		7068	35.6	19879	3296	489.9	2.41	20369	68.8	3377	
2019-20	12780	-0.2	7678	37.5	20458	3137	445.6	2.13	20904	74.4	3205	-5.1
2020-21	13799	8.0	8222	37.3	22021	3397	477.4	2.12	22499	74.0	3471	8.3
2021-22	14541	5.4	8591	37.1	23132	3598	499.2	2.11	23632	73.4	3675	5.9
2022-23	15019	3.3	8798	36.9	23817	3735	511.6	2.10	24328	72.8	3815	3.8
2023-24	15521	3.3	9015	36.7	24536	3879	524.6	2.09	25061	72.2	3962	3.9
2024-25	16042	3.4	9253	36.6	25295	4033	538.3	2.08	25833	71.6	4119	3.9
2025-26	16590	3.4	9486	36.4	26076	4193	552.3	2.07	26629	71.0	4281	4.0
2026-27	17168	3.5	9731	36.2	26899	4362	567.0	2.06	27466	70.4	4454	4.0
2027-28	17777	3.6	9987	36.0	27765	4541	582.5	2.05	28347	69.8	4636	4.1
2028-29	18421	3.6	10242	35.7	28663	4728	598.5	2.05	29261	69.2	4827	4.1
Ave. Growth (2019-2029)	3.70%				3.73%	3.67%			3.69%		3.64%	

Table 1-4: Consumer Category Wise Sale – GWh without incorporating Load Shedding effect (Low Forecast)

Year	Domestic		Commercial		Public Light		Small Industries		M&L Industries		Tube Well		Bulk		Total	
	(GWh)	G.R	(GWh)	G.R	(GWh)	G.R	(GWh)	G.R	(GWh)	G.R	(GWh)	G.R	(GWh)	G.R	(GWh)	G.R
2018-19	5192		792		13		98		2245		66		668.0		9074	
2019-20	5526	6.4	775	-2.1	13	-0.8	84	-14.3	1924	-14.3	69	4.3	652.0	-2.4	9043	-0.3
2020-21	5723	3.6	808	4.2	13	2.0	86	2.0	2691	39.9	71	2.5	671.0	2.9	10062	11.3
2021-22	5866	2.5	858	6.2	13	2.0	90	5.0	3214	19.4	73	2.5	690.0	2.8	10804	7.4
2022-23	6181	5.4	902	5.1	14	2.0	92	2.0	3309	3.0	75	2.5	711.0	3.0	11282	4.4
2023-24	6508	5.3	946	5.0	14	2.0	94	2.0	3415	3.2	76	2.5	731.0	2.8	11784	4.5
2024-25	6847	5.2	993	4.9	14	2.0	96	2.0	3524	3.2	78	2.5	753.0	3.0	12305	4.4
2025-26	7200	5.2	1041	4.9	15	2.0	97	2.0	3645	3.4	80	2.5	775.0	2.9	12853	4.5
2026-27	7566	5.1	1091	4.8	15	2.0	99	2.0	3780	3.7	82	2.5	797.0	2.8	13431	4.5
2027-28	7947	5.0	1143	4.8	15	2.0	101	2.0	3929	3.9	84	2.5	821.0	3.0	14040	4.5
2028-29	8342	5.0	1197	4.7	15	2.0	103	2.0	4094	4.2	87	2.5	845.0	2.9	14684	4.6
Ave. Growth (2019-2029)	4.9%		4.2%		1.7%		0.5%		6.2%		2.7%		2.4%		4.9%	

Table 1-5: Consumer Category Wise Sale – GWh (Base Forecast)

Year	Domestic		Commercial		Public Light		Small Industries		M&L Industries		Tube Well		Bulk		Total	
	(GWh)	G.R	(GWh)	G.R	(GWh)	G.R	(GWh)	G.R	(GWh)	G.R	(GWh)	G.R	(GWh)	G.R	(GWh)	G.R
2018-19	7330		1118		18		138		3170		94		943		12811	
2019-20	7810	6.6	1095	-2.0	18	-0.7	119	-14.2	2718	-14.2	98	4.4	921	-2.3	12780	-0.2
2020-21	7848	0.5	1108	1.1	18	-1.0	118	-1.0	3690	35.8	97	-0.5	920	-0.1	13799	8.0
2021-22	7895	0.6	1154	4.2	18	0.1	121	3.0	4326	17.2	98	0.6	929	1.0	14541	5.4
2022-23	8228	4.2	1200	4.0	18	0.9	122	0.9	4405	1.8	99	1.4	946	1.8	15019	3.3
2023-24	8571	4.2	1246	3.8	18	0.9	123	0.9	4498	2.1	101	1.4	963	1.8	15521	3.3
2024-25	8927	4.1	1294	3.8	19	1.0	125	1.0	4594	2.1	102	1.5	981	1.9	16042	3.4
2025-26	9293	4.1	1344	3.8	19	1.0	126	1.0	4705	2.4	104	1.5	1000	1.9	16590	3.4
2026-27	9671	4.1	1395	3.8	19	1.0	127	1.0	4831	2.7	105	1.5	1019	1.9	17168	3.5
2027-28	10062	4.0	1447	3.8	19	1.0	128	1.0	4975	3.0	107	1.5	1039	2.0	17777	3.6
2028-29	10465	4.0	1502	3.8	19	1.1	130	1.1	5137	3.3	109	1.6	1060	2.0	18421	3.6
Ave. Growth (2019-2029)	3.6%		3.0%		0.5%		-0.6%		4.9%		1.5%		1.2%		3.7%	

Table 1-6: Consumer Category Wise Demand – MW without incorporating Load Shedding effect (Low Forecast)

Year	Domestic		Commercial		Public Light		Small Industries		M&L Industries		Tube Well		Bulk		Total	
	(MW)	G.R	(MW)	G.R	(MW)	G.R	(MW)	G.R	(MW)	G.R	(MW)	G.R	(MW)	G.R	(MW)	G.R
2018-19	1101		134		3		11		321		11		86		1523	
2019-20	1046	-5.0	117	-12.5	3	-11.3	8	-23.4	232	-27.8	10	-6.8	75	-12.8	1363	-10.5
2020-21	1119	7.0	127	8.1	3	5.5	9	5.5	318	37.2	11	6.0	80	6.7	1533	12.5
2021-22	1173	4.8	138	8.9	3	4.4	9	7.5	381	19.8	11	4.9	84	5.0	1661	8.4
2022-23	1244	6.1	147	6.2	3	2.8	10	2.9	395	3.7	11	3.4	87	3.6	1751	5.4
2023-24	1319	6.1	156	6.0	3	2.9	10	2.9	411	4.0	12	3.4	91	4.6	1847	5.5
2024-25	1399	6.0	165	6.0	3	2.9	10	2.9	428	4.0	12	3.4	94	3.3	1947	5.4
2025-26	1482	6.0	175	6.0	3	2.9	10	2.9	446	4.3	13	3.4	98	4.3	2054	5.5
2026-27	1571	6.0	185	6.0	3	3.0	11	3.0	467	4.6	13	3.5	101	3.1	2168	5.5
2027-28	1664	5.9	196	5.9	3	3.0	11	3.0	489	4.9	14	3.5	105	4.0	2289	5.6
2028-29	1763	5.9	208	5.9	4	3.1	11	3.0	515	5.2	14	3.5	110	4.8	2418	5.6
Ave. Growth (2019-2029)	4.8%		4.5%		1.8%		0.6%		4.8%		2.8%				4.7%	

Table 1-7: **Consumer Category Wise Demand – MW (Base Forecast)**

Year	Domestic		Commercial		Public Light		Small Industries		M&L Industries		Tube Well		Bulk		Total	
	(MW)	G.R	(MW)	G.R	(MW)	G.R	(MW)	G.R	(MW)	G.R	(MW)	G.R	(MW)	G.R	(MW)	G.R
2018-19	1535		187		4		15		448		15		120		2124	
2019-20	1505	-2.0	169	-9.8	4	-8.6	12	-21.0	333	-25.6	14	-3.9	108	-10.0	1960	-7.7
2020-21	1554	3.3	176	4.4	4	1.9	12	1.9	442	32.5	15	2.4	111	2.8	2129	8.6
2021-22	1596	2.7	188	6.8	4	2.3	13	5.4	519	17.4	15	2.9	114	2.7	2262	6.2
2022-23	1673	4.8	197	4.9	4	1.6	13	1.6	531	2.5	15	2.1	117	2.6	2355	4.1
2023-24	1753	4.8	207	4.8	4	1.7	13	1.7	546	2.8	16	2.2	120	2.6	2454	4.2
2024-25	1837	4.8	217	4.8	4	1.7	13	1.7	562	2.8	16	2.2	123	2.5	2558	4.2
2025-26	1925	4.8	227	4.8	4	1.8	14	1.8	579	3.1	16	2.3	127	3.3	2667	4.3
2026-27	2017	4.8	238	4.8	4	1.8	14	1.8	599	3.4	17	2.3	130	2.4	2784	4.4
2027-28	2114	4.8	249	4.8	4	1.9	14	1.9	622	3.7	17	2.4	134	3.1	2907	4.4
2028-29	2216	4.8	261	4.8	4	1.9	14	1.9	647	4.1	18	2.4	138	3.0	3039	4.5
Ave. Growth (2019-2029)	3.7%		3.4%		0.8%		-0.4%		3.7%		1.7%				3.6%	

Table 1-8: Division-wise Sale (GWh), Generation (GWh) and Demand (MW) Forecast (Division: Peshawar)

Year	Energy Sale		Distribution Losses		Transmission Losses		Generation	Load Factor	Peak Demand
	(GWh)	G.R (%)	(GWh)	%	(GWh)	%	(GWh)	%	(MW)
2018-19	4372		2412	35.56	167	2.41	6951	39.8	1994
2019-20	4306	-1.51	2587	37.53	150	2.13	7043	38.9	2065
2020-21	4263	-1.00	2540	37.34	147	2.12	6950	38.6	2055
2021-22	4317	1.28	2551	37.14	148	2.11	7016	38.5	2078
2022-23	4550	5.38	2665	36.94	155	2.10	7370	38.6	2179
2023-24	4790	5.29	2782	36.74	162	2.09	7735	38.7	2284
2024-25	5038	5.17	2906	36.58	169	2.08	8114	38.7	2392
2025-26	5296	5.11	3028	36.38	176	2.07	8500	38.8	2503
2026-27	5564	5.06	3154	36.18	184	2.06	8901	38.8	2617
2027-28	5843	5.01	3282	35.97	191	2.05	9316	38.9	2734
2028-29	6133	4.97	3410	35.73	199	2.05	9743	39.0	2855
Ave. Growth (2019-2029)	3.44 %						3.43 %		3.65 %

Table 1-9: Division-wise Sale (GWh), Generation (GWh) and Demand (MW) Forecast (Division: Mardan)

Year	Energy Sale (GWh)	G.R (%)	Distribution Losses (GWh)	%	Transmission Losses (GWh)	%	Generation (GWh)	Load Factor %	Peak Demand (MW)
2018-19	1637		903	35.56	63	2.41	2602	46.0	645
2019-20	1674	2.31	1006	37.53	58	2.13	2739	47.7	656
2020-21	2749	64.20	1638	37.34	95	2.12	4483	53.2	962
2021-22	2982	8.47	1762	37.14	102	2.11	4847	54.0	1025
2022-23	3025	1.42	1772	36.94	103	2.10	4899	53.9	1038
2023-24	3071	1.53	1783	36.74	104	2.09	4958	53.8	1052
2024-25	3120	1.59	1799	36.58	105	2.08	5024	53.7	1068
2025-26	3173	1.70	1814	36.38	106	2.07	5092	53.6	1084
2026-27	3230	1.81	1831	36.18	107	2.06	5168	53.5	1102
2027-28	3292	1.92	1850	35.97	108	2.05	5250	53.5	1120
2028-29	3359	2.04	1868	35.73	109	2.05	5336	53.4	1140
Ave. Growth (2019-2029)	7.45 %						7.44 %		5.85 %

Table 1-10: Division-wise Sale (GWh), Generation (GWh) and Demand (MW) Forecast (Division: Kohat)

Year	Energy Sale		Distribution Losses		Transmission Losses		Generation	Load Factor	Peak Demand
	(GWh)	G.R (%)	(GWh)	%	(GWh)	%	(GWh)	%	(MW)
2018-19	1191		657	35.56	46	2.41	1894	38.3	564
2019-20	1213	1.84	729	37.53	42	2.13	1985	38.1	595
2020-21	1192	-1.76	710	37.34	41	2.12	1943	38.0	583
2021-22	1184	-0.68	699	37.14	41	2.11	1924	38.0	577
2022-23	1211	2.29	709	36.94	41	2.10	1962	38.0	589
2023-24	1239	2.34	720	36.74	42	2.09	2001	38.0	601
2024-25	1269	2.39	732	36.58	43	2.08	2043	38.0	615
2025-26	1300	2.45	743	36.38	43	2.07	2086	37.9	628
2026-27	1332	2.50	755	36.18	44	2.06	2132	37.9	642
2027-28	1366	2.55	768	35.97	45	2	2179	37.9	656
2028-29	1402	2.61	780	35.73	46	2.05	2227	37.9	671
Ave. Growth (2019-2029)	1.64 %						1.63 %		1.76 %

Table 1-11: Division-wise Sale (GWh), Generation (GWh) and Demand (MW) Forecast (Division: Bannu)

Year	Energy Sale		Distribution Losses		Transmission Losses		Generation	Load Factor	Peak Demand
	(GWh)	G.R (%)	(GWh)	%	(GWh)	%	(GWh)	%	(MW)
2018-19	372		205	35.56	14	2	592	21.2	318
2019-20	380	2.12	228	37.53	13	2	622	20.9	340
2020-21	374	-1.76	223	37.34	13	2	609	20.8	335
2021-22	371	-0.70	219	37.14	13	2	603	20.8	331
2022-23	382	2.90	224	36.94	13	2	618	20.8	340
2023-24	393	2.93	228	36.74	13	2	634	20.8	348
2024-25	405	2.97	233	36.58	14	2	652	20.8	358
2025-26	417	3.00	238	36.38	14	2	669	20.8	367
2026-27	429	3.04	243	36.18	14	2	687	20.8	377
2027-28	443	3.08	249	35.97	15	2	706	20.8	387
2028-29	456	3.12	254	35.73	15	2	725	20.8	398
Ave. Growth (2019-2029)	2.06 %						2.05 %		2.25 %

Table 1-12: Division-wise Sale (GWh), Generation (GWh) and Demand (MW) Forecast (Division: D.I.Khan)

Year	Energy Sale		Distribution Losses		Transmission Losses		Generation	Load Factor	Peak Demand
	(GWh)	G.R (%)	(GWh)	%	(GWh)	%	(GWh)	%	(MW)
2018-19	627		346	35.56	24	2	997	37.1	307
2019-20	639	1.83	384	37.53	22	2	1045	36.8	324
2020-21	627	-1.90	373	37.34	22	2	1022	36.7	318
2021-22	622	-0.74	367	37.14	21	2	1011	36.7	314
2022-23	642	3.20	376	36.94	22	2	1040	36.7	323
2023-24	663	3.23	385	36.74	22	2	3075	36.8	332
2024-25	684	3.25	395	36.58	23	2	1102	36.8	342
2025-26	707	3.28	404	36.38	24	2	1134	36.8	352
2026-27	730	3.32	414	36.18	24	2	1168	36.9	362
2027-28	755	3.35	424	35.97	25	2	1203	36.9	372
2028-29	780	3.39	434	35.73	25	2	1239	36.9	383
Ave. Growth (2019-2029)	2.20 %						2.19 %		2.24 %

Table 1-13: Division-wise Sale (GWh), Generation (GWh) and Demand (MW) Forecast (Division: Malakand)

Year	Energy Sale		Distribution Losses		Transmission Losses		Generation	Load Factor	Peak Demand
	(GWh)	G.R (%)	(GWh)	%	(GWh)	%	(GWh)	%	(MW)
2018-19	1885		1040	35.56	72	2	2998	51.5	664
2019-20	1953	3.58	1173	37.53	68	2	3194	52.3	697
2020-21	1855	-5.02	1105	37.34	64	2	3024	52.0	664
2021-22	1821	-1.83	1076	37.14	63	2	2959	51.9	651
2022-23	1898	4.25	1112	36.94	65	2	3075	52.0	676
2023-24	1980	4.31	1150	36.74	67	2	3197	52.0	702
2024-25	2064	4.26	1191	36.58	69	2	3324	52.0	729
2025-26	2153	4.31	1231	36.38	72	2	3456	52.1	757
2026-27	2247	4.37	1274	36.18	74	2	3596	52.1	787
2027-28	2347	4.44	1319	35.97	77	2	3743	52.2	819
2028-29	2453	4.50	1364	35.73	80	2	3896	52.2	851
Ave. Growth (2019-2029)	2.67 %						2.66 %		2.52 %

Table 1-14: Division-wise Sale (GWh), Generation (GWh) and Demand (MW) Forecast (Division: Hazara)

Year	Energy Sale		Distribution Losses		Transmission Losses		Generation	Load Factor	Peak Demand
	(GWh)	G.R (%)	(GWh)	%	(GWh)	%	(GWh)	%	(MW)
2018-19	2726		1504	35.56	104	2	4334	62.9	787
2019-20	2614	-4.09	1571	37.53	91	2	4276	63.7	766
2020-21	2740	4.82	1633	37.34	95	2	4468	63.2	807
2021-22	3244	18.39	1917	37.14	111	2	5272	63.3	950
2022-23	3312	2.08	1940	36.94	113	2	5365	63.6	963
2023-24	3385	2.22	1966	36.74	114	2	5466	63.8	978
2024-25	3462	2.26	1997	36.58	116	2	5575	64.0	994
2025-26	3545	2.40	2027	36.38	118	2	5690	64.3	1011
2026-27	3635	2.53	2060	36.18	120	2	5815	64.5	1029
2027-28	3732	2.67	2097	35.97	122	2	5951	64.8	1049
2028-29	3837	2.82	2133	35.73	125	2	6095	65.1	1070
Ave. Growth (2019-2029)	3.48 %						3.47 %		3.11 %

Table 1-15: District-wise Sale (GWh), Generation (GWh) and Demand (MW) Forecast (District: Peshawar)

Year	Energy Sale (GWh)	G.R (%)	Distribution Losses (GWh)	%	Transmission Losses (GWh)	%	Generation (GWh)	Load Factor %	Peak Demand (MW)
2018-19	2688		1483	35.56	103	2.41	4274	38.7	1261
2019-20	2650	-1.42	1592	37.53	92	2.13	4334	37.6	1315
2020-21	2622	-1.04	1562	37.34	91	2.12	4275	37.2	1312
2021-22	2660	1.44	1572	37.14	91	2.11	4323	37.1	1329
2022-23	2815	5.84	1649	36.94	96	2.10	4561	37.2	1398
2023-24	2976	5.71	1729	36.74	101	2.09	4805	37.4	1468
2024-25	3141	5.55	1812	36.58	105	2.08	5059	37.5	1541
2025-26	3313	5.46	1894	36.38	110	2.07	5317	37.6	1615
2026-27	3491	5.38	1979	36.18	115	2.06	5585	37.7	1692
2027-28	3677	5.32	2066	35.97	120	2.05	5863	37.8	1770
2028-29	3870	5.26	2152	35.73	126	2.05	6148	37.9	1851
Ave. Growth (2019-2029)	3.71%						3.70%		3.91%

Table 1-16: District-wise Sale (GWh), Generation (GWh) and Demand (MW) Forecast (District: Charsada)

Year	Energy Sale		Distribution Losses		Transmission Losses		Generation	Load Factor	Peak Demand
	(GWh)	G.R (%)	(GWh)	%	(GWh)	%	(GWh)	%	(MW)
2018-19	404		223	35.56	15	2.41	642	23.0	318
2019-20	408	1.12	245	37.53	14	2.13	668	22.6	337
2020-21	400	-2.11	238	37.34	14	2.12	652	22.5	331
2021-22	397	-0.70	234	37.14	14	2.11	645	22.4	328
2022-23	410	3.40	240	36.94	14	2.10	665	22.5	338
2023-24	424	3.43	247	36.74	14	2.09	685	22.5	347
2024-25	439	3.44	253	36.58	15	2.08	707	22.6	358
2025-26	454	3.47	260	36.38	15	2.07	729	22.6	368
2026-27	470	3.51	267	36.18	16	2.06	752	22.6	379
2027-28	487	3.54	274	35.97	16	2.05	776	22.7	391
2028-29	504	3.58	280	35.73	16	2.05	801	22.7	403
Ave. Growth (2019-2029)	2.25%						2.24%		2.38%

Table 1-17: District-wise Sale (GWh), Generation (GWh) and Demand (MW) Forecast (District: Nowsehra)

Year	Energy Sale (GWh)	G.R (%)	Distribution Losses (GWh)	%	Transmission Losses (GWh)	%	Generation (GWh)	Load Factor %	Peak Demand (MW)
2018-19	1280		706	35.56	49	2.41	2035	48.5	479
2019-20	1248	-2.52	750	37.53	44	2.13	2041	48.5	480
2020-21	1241	-0.56	739	37.34	43	2.12	2023	48.2	479
2021-22	1260	1.56	744	37.14	43	2.11	2048	47.9	488
2022-23	1324	5.06	775	36.94	45	2.10	2144	47.6	515
2023-24	1390	4.99	807	36.74	47	2.09	2244	47.2	542
2024-25	1458	4.90	841	36.58	49	2.08	2348	46.9	571
2025-26	1529	4.85	874	36.38	51	2.07	2454	46.6	601
2026-27	1602	4.81	908	36.18	53	2.06	2563	46.4	631
2027-28	1679	4.78	943	35.97	55	2.05	2677	46.2	662
2028-29	1759	4.75	978	35.73	57	2.05	2794	45.9	694
Ave. Growth (2019-2029)	3.23%						3.22%		3.78%

Table 1-18: District-wise Sale (GWh), Generation (GWh) and Demand (MW) Forecast (District: Mardan)

Year	Energy Sale		Distribution Losses		Transmission Losses		Generation	Load Factor	Peak Demand
	(GWh)	G.R (%)	(GWh)	%	(GWh)	%	(GWh)	%	(MW)
2018-19	966		533	35.56	37	2.41	1536	43.6	403
2019-20	973	0.65	584	37.53	34	2.13	1591	43.4	419
2020-21	2105	116.42	1254	37.34	73	2.12	3432	52.3	748
2021-22	2360	12.12	1394	37.14	81	2.11	3835	53.4	820
2022-23	2375	0.63	1391	36.94	81	2.10	3847	53.2	825
2023-24	2392	0.70	1389	36.74	81	2.09	3861	53.0	832
2024-25	2410	0.78	1390	36.58	81	2.08	3881	52.8	839
2025-26	2431	0.86	1390	36.38	81	2.07	3902	52.6	847
2026-27	2454	0.93	1391	36.18	81	2.06	3925	52.4	855
2027-28	2478	1.01	1392	35.97	81	2.05	3952	52.2	864
2028-29	2506	1.09	1393	35.73	81	2.05	3980	52.0	873
Ave. Growth (2019-2029)	10.00%						9.99%		8.05%

Table 1-19: District-wise Sale (GWh), Generation (GWh) and Demand (MW) Forecast (District: Sawabi)

Year	Energy Sale		Distribution Losses		Transmission Losses		Generation	Load Factor	Peak Demand
	(GWh)	G.R (%)	(GWh)	%	(GWh)	%	(GWh)	%	(MW)
2018-19	671		370	35.56	26	2.41	1066	46.1	264
2019-20	702	4.69	422	37.53	24	2.13	1148	50.6	259
2020-21	645	-8.16	384	37.34	22	2.12	1051	49.0	245
2021-22	622	-3.45	368	37.14	21	2.11	1011	48.3	239
2022-23	650	4.41	381	36.94	22	2.10	1053	48.7	247
2023-24	679	4.53	395	36.74	23	2.09	1097	49.1	255
2024-25	709	4.45	409	36.58	24	2.08	1143	49.4	264
2025-26	742	4.56	424	36.38	25	2.07	1191	49.8	273
2026-27	777	4.67	440	36.18	26	2.06	1242	50.1	283
2027-28	814	4.79	457	35.97	27	2.05	1297	50.5	293
2028-29	854	4.91	475	35.73	28	2.05	1356	51.0	304
Ave. Growth (2019-2029)	2.44%						2.43%		1.42%

Table 1-20: District-wise Sale (GWh), Generation (GWh) and Demand (MW) Forecast (District: Kohat)

Year	Energy Sale		Distribution Losses		Transmission Losses		Generation	Load Factor	Peak Demand
	(GWh)	G.R (%)	(GWh)	%	(GWh)	%	(GWh)	%	(MW)
2018-19	890		491	35.56	34	2.41	1416	44.2	366
2019-20	901	1.24	542	37.53	31	2.13	1475	44.2	381
2020-21	884	-1.89	527	37.34	31	2.12	1442	44.1	373
2021-22	879	-0.67	519	37.14	30	2.11	1428	44.2	369
2022-23	897	2.11	525	36.94	31	2.10	1453	44.2	376
2023-24	916	2.16	532	36.74	31	2.09	1480	44.2	382
2024-25	937	2.22	540	36.58	31	2.08	1509	44.2	390
2025-26	958	2.28	548	36.38	44	2.07	1538	44.2	397
2026-27	981	2.34	556	36.18	32	2.06	1569	44.2	405
2027-28	1004	2.41	564	35.97	33	2.05	1601	44.2	414
2028-29	1029	2.47	572	35.73	33	2.05	1635	44.2	422
Ave. Growth (2019-2029)	1.46%						1.45%		1.45%

Table 1-21: District-wise Sale (GWh), Generation (GWh) and Demand (MW) Forecast (District: Hangu)

Year	Energy Sale		Distribution Losses		Transmission Losses		Generation	Load Factor	Peak Demand
	(GWh)	G.R (%)	(GWh)	%	(GWh)	%	(GWh)	%	(MW)
2018-19	185		102	35.56	7	2.41	295	27.1	124
2019-20	192	3.50	115	37.53	7	2.13	314	26.9	133
2020-21	189	-1.42	113	37.34	7	2.12	308	26.9	131
2021-22	188	-0.71	111	37.14	6	2.11	305	26.9	130
2022-23	193	2.81	113	36.94	7	2.10	313	26.9	133
2023-24	199	2.84	115	36.74	7	2.09	321	26.9	136
2024-25	204	2.88	118	36.58	7	2.08	329	26.9	140
2025-26	210	2.92	120	36.38	7	2.07	338	26.9	143
2026-27	216	2.95	123	36.18	7	2.06	346	26.9	147
2027-28	223	2.98	125	35.97	7	2.05	355	26.9	151
2028-29	230	3.02	128	35.73	7	2.05	365	26.9	155
Ave. Growth (2019-2029)	2.16%						2.15%		2.22%

Table 1-22: District-wise Sale (GWh), Generation (GWh) and Demand (MW) Forecast (District: Karak)

Year	Energy Sale		Distribution Losses		Transmission Losses		Generation	Load Factor	Peak Demand
	(GWh)	G.R (%)	(GWh)	%	(GWh)	%	(GWh)	%	(MW)
2018-19	116		64	35.56	4	2.41	184	22.7	93
2019-20	120	3.85	72	37.53	4	2.13	196	22.4	100
2020-21	118	-1.33	71	37.34	4	2.12	193	22.4	98
2021-22	118	-0.69	69	37.14	4	2.11	191	22.4	97
2022-23	121	2.78	71	36.94	4	2.10	196	22.4	100
2023-24	124	2.81	72	36.74	4	2.09	201	22.4	102
2024-25	128	2.85	74	36.58	4	2.08	206	22.4	105
2025-26	131	2.88	75	36.38	4	2.07	211	22.4	108
2026-27	135	2.91	77	36.18	4	2.06	216	22.4	110
2027-28	139	2.95	78	35.97	5	2.05	222	22.4	113
2028-29	143	2.98	80	35.73	5	2.05	228	22.4	116
Ave. Growth (2019-2029)	2.18%						2.17%		2.29%

Table 1-23: District-wise Sale (GWh), Generation (GWh) and Demand (MW) Forecast (District: Bannu)

Year	Energy Sale		Distribution Losses		Transmission Losses		Generation	Load Factor	Peak Demand
	(GWh)	G.R (%)	(GWh)	%	(GWh)	%	(GWh)	%	(MW)
2018-19	226		125	35.56	9	2.41	359	21.1	194
2019-20	230	1.70	138	37.53	8	2.13	376	20.7	207
2020-21	225	-1.96	134	37.34	8	2.12	367	20.6	204
2021-22	223	-0.82	132	37.14	8	2.11	363	20.6	202
2022-23	230	2.90	135	36.94	8	2.10	373	20.6	207
2023-24	237	2.94	137	36.74	8	2.09	382	20.6	212
2024-25	244	2.97	141	36.58	8	2.08	393	20.6	218
2025-26	251	3.01	144	36.38	8	2.07	403	20.6	223
2026-27	259	3.06	147	36.18	9	2.06	414	20.6	229
2027-28	267	3.10	150	35.97	9	2.05	425	20.7	235
2028-29	275	3.14	153	35.73	9	2.05	437	20.7	241
Ave. Growth (2019-2029)	1.99%						1.98%		2.19%

Table 1-24: District-wise Sale (GWh), Generation (GWh) and Demand (MW) Forecast (District: Lakki)

Year	Energy Sale		Distribution Losses		Transmission Losses		Generation	Load Factor	Peak Demand
	(GWh)	G.R (%)	(GWh)	%	(GWh)	%	(GWh)	%	(MW)
2018-19	146		81	35.56	6	2.41	233	19.8	134
2019-20	150	2.76	90	37.53	5	2.13	246	19.5	144
2020-21	148	-1.47	88	37.34	5	2.12	242	19.5	142
2021-22	148	-0.52	87	37.14	5	2.11	240	19.5	140
2022-23	152	2.89	89	36.94	5	2.10	246	19.5	144
2023-24	156	2.92	91	36.74	5	2.09	252	19.5	148
2024-25	161	2.96	93	36.58	5	2.08	259	19.5	152
2025-26	166	2.99	95	36.38	6	2.07	266	19.5	156
2026-27	171	3.02	97	36.18	6	2.06	273	19.5	160
2027-28	176	3.05	99	35.97	6	2.05	280	19.4	165
2028-29	181	3.09	101	35.73	6	2.05	288	19.4	169
Ave. Growth (2019-2029)	2.16%						2.15%		2.34%

Table 1-25: District-wise Sale (GWh), Generation (GWh) and Demand (MW) Forecast (District: D.I Khan)

Year	Energy Sale		Distribution Losses		Transmission Losses		Generation	Load Factor	Peak Demand
	(GWh)	G.R (%)	(GWh)	%	(GWh)	%	(GWh)	%	(MW)
2018-19	558		308	35.56	21	2.41	888	39.1	259
2019-20	567	1.52	340	37.53	20	2.13	927	38.8	273
2020-21	555	-1.99	331	37.34	19	2.12	906	38.8	267
2021-22	551	-0.75	326	37.14	19	2.11	896	38.8	264
2022-23	569	3.25	333	36.94	19	2.10	922	38.8	271
2023-24	588	3.29	341	36.74	20	2.09	949	38.8	279
2024-25	607	3.30	350	36.58	20	2.08	978	38.8	287
2025-26	628	3.34	359	36.38	21	2.07	1007	38.9	296
2026-27	649	3.37	368	36.18	21	2.06	1038	38.9	305
2027-28	671	3.41	377	35.97	22	2.05	1070	38.9	314
2028-29	694	3.45	386	35.73	23	2.05	1102	39.0	323
Ave. Growth (2019-2029)	2.20%						2.19%		2.22%

Table 1-26: District-wise Sale (GWh), Generation (GWh) and Demand (MW) Forecast (District: Tank)

Year	Energy Sale		Distribution Losses		Transmission Losses		Generation	Load Factor	Peak Demand
	(GWh)	G.R (%)	(GWh)	%	(GWh)	%	(GWh)	%	(MW)
2018-19	69		38	35.56	3	2.41	110	21.7	58
2019-20	72	4.29	43	37.53	3	2.13	118	21.6	62
2020-21	71	-1.16	42	37.34	2	2.12	116	21.5	62
2021-22	71	-0.62	42	37.14	2	2.11	115	21.5	61
2022-23	73	2.74	43	36.94	2	2.10	118	21.5	62
2023-24	75	2.77	43	36.74	3	2.09	121	21.5	64
2024-25	77	2.81	44	36.58	3	2.08	124	21.5	66
2025-26	79	2.84	45	36.38	3	2.07	127	21.5	67
2026-27	81	2.87	46	36.18	3	2.06	130	21.5	69
2027-28	84	2.90	47	35.97	3	2.05	133	21.5	71
2028-29	86	2.93	48	35.73	3	2.05	137	21.5	73
Ave. Growth (2019-2029)	2.22%						2.21%		2.30%

Table 1-27: District-wise Sale (GWh), Generation (GWh) and Demand (MW) Forecast (District: Swat)

Year	Energy Sale		Distribution Losses		Transmission Losses		Generation	Load Factor	Peak Demand
	(GWh)	G.R (%)	(GWh)	%	(GWh)	%	(GWh)	%	(MW)
2018-19	630		347	35.56	24	2.41	1001	53.3	214
2019-20	667	5.88	400	37.53	23	2.13	1090	53.9	231
2020-21	648	-2.78	386	37.34	22	2.12	1057	53.8	224
2021-22	641	-1.15	378	37.14	22	2.11	1041	53.8	221
2022-23	661	3.15	387	36.94	23	2.10	1070	53.8	227
2023-24	682	3.19	396	36.74	23	2.09	1101	53.9	233
2024-25	704	3.21	406	36.58	24	2.08	1133	53.9	240
2025-26	727	3.26	416	36.38	24	2.07	1166	53.9	247
2026-27	751	3.32	426	36.18	25	2.06	1201	53.9	255
2027-28	776	3.37	436	35.97	25	2.05	1238	53.9	262
2028-29	803	3.43	446	35.73	26	2.05	1275	53.9	270
Ave. Growth (2019-2029)	2.46%						2.45%		2.33%

Table 1-28: District-wise Sale (GWh), Generation (GWh) and Demand (MW) Forecast (District: Upper Dir)

Year	Energy Sale		Distribution Losses		Transmission Losses		Generation	Load Factor	Peak Demand
	(GWh)	G.R (%)	(GWh)	%	(GWh)	%	(GWh)	%	(MW)
2018-19	89		49	35.56	3	2.41	142	47.5	34
2019-20	94	5.07	56	37.53	3	2.13	154	47.4	37
2020-21	93	-1.17	55	37.34	3	2.12	151	47.4	36
2021-22	92	-0.77	54	37.14	3	2.11	150	47.4	36
2022-23	95	2.81	56	36.94	3	2.10	154	47.4	37
2023-24	97	2.83	57	36.74	3	2.09	157	47.4	38
2024-25	100	2.88	58	36.58	3	2.08	161	47.4	39
2025-26	103	2.91	59	36.38	3	2.07	166	47.4	40
2026-27	106	2.93	60	36.18	4	2.06	170	47.4	41
2027-28	109	2.96	61	35.97	4	2.05	174	47.4	42
2028-29	113	2.99	63	35.73	4	2.05	179	47.4	43
Ave. Growth (2019-2029)	2.33%						2.32%		2.33%

Table 1-29: District-wise Sale (GWh), Generation (GWh) and Demand (MW) Forecast (District: Bunair)

Year	Energy Sale		Distribution Losses		Transmission Losses		Generation	Load Factor	Peak Demand
	(GWh)	G.R (%)	(GWh)	%	(GWh)	%	(GWh)	%	(MW)
2018-19	222		122	35.56	8	2.41	352	49.6	81
2019-20	202	-8.89	121	37.53	7	2.13	330	49.5	76
2020-21	188	-6.63	112	37.34	7	2.12	307	49.5	71
2021-22	183	-2.89	108	37.14	6	2.11	297	49.5	69
2022-23	190	4.01	112	36.94	6	2.10	308	49.5	71
2023-24	198	4.12	115	36.74	7	2.09	320	49.5	74
2024-25	206	4.07	119	36.58	7	2.08	332	49.5	77
2025-26	215	4.17	123	36.38	7	2.07	345	49.5	80
2026-27	224	4.27	127	36.18	7	2.06	358	49.5	83
2027-28	234	4.37	131	35.97	8	2.05	373	49.5	86
2028-29	244	4.47	136	35.73	8	2.05	388	49.5	90
Ave. Growth (2019-2029)	0.98%						0.97%		0.99%

Table 1-30: District-wise Sale (GWh), Generation (GWh) and Demand (MW) Forecast (District: Shangla)

Year	Energy Sale		Distribution Losses		Transmission Losses		Generation	Load Factor	Peak Demand
	(GWh)	G.R (%)	(GWh)	%	(GWh)	%	(GWh)	%	(MW)
2018-19	38		21	35.56	1	2.41	61	34.6	20
2019-20	40	5.39	24	37.53	1	2.13	66	34.7	22
2020-21	40	-1.03	24	37.34	1	2.12	65	34.7	22
2021-22	40	-0.68	24	37.14	1	2.11	65	34.6	21
2022-23	41	2.79	24	36.94	1	2.10	66	34.6	22
2023-24	42	2.81	24	36.74	1	2.09	68	34.6	22
2024-25	43	2.85	25	36.58	1	2.08	70	34.6	23
2025-26	45	2.88	25	36.38	1	2.07	71	34.6	24
2026-27	46	2.91	26	36.18	2	2.06	73	34.6	24
2027-28	47	2.93	26	35.97	2	2.05	75	34.6	25
2028-29	49	2.96	27	35.73	2	2.05	77	34.6	25
Ave. Growth (2019-2029)	2.37%						2.36%		2.36%

Table 1-31: District-wise Sale (GWh), Generation (GWh) and Demand (MW) Forecast (District: Malakand)

Year	Energy Sale		Distribution Losses		Transmission Losses		Generation	Load Factor	Peak Demand
	(GWh)	G.R (%)	(GWh)	%	(GWh)	%	(GWh)	%	(MW)
2018-19	341		188	35.56	13	2.41	542	60.9	102
2019-20	365	7.03	219	37.53	13	2.13	596	64.4	106
2020-21	310	-15.02	185	37.34	11	2.12	505	65.0	89
2021-22	289	-6.85	171	37.14	10	2.11	469	65.3	82
2022-23	307	6.34	180	36.94	10	2.10	497	65.1	87
2023-24	327	6.51	190	36.74	11	2.09	528	65.0	93
2024-25	347	6.23	200	36.58	12	2.08	559	64.8	98
2025-26	369	6.37	211	36.38	12	2.07	593	64.7	105
2026-27	393	6.52	223	36.18	13	2.06	630	64.6	111
2027-28	420	6.66	236	35.97	14	2.05	669	64.4	119
2028-29	448	6.80	249	35.73	15	2.05	712	64.3	126
Ave. Growth (2019-2029)	2.78%						2.77%		2.22%

Table 1-32: District-wise Sale (GWh), Generation (GWh) and Demand (MW) Forecast (District: Chitral)

Year	Energy Sale		Distribution Losses		Transmission Losses		Generation	Load Factor	Peak Demand
	(GWh)	G.R (%)	(GWh)	%	(GWh)	%	(GWh)	%	(MW)
2018-19	39		22	35.56	2	2.41	63	39.8	18
2019-20	51	29.77	31	37.53	2	2.13	84	41.2	23
2020-21	60	17.59	36	37.34	2	2.12	98	42.2	27
2021-22	69	14.99	41	37.14	2	2.11	112	42.9	30
2022-23	80	16.07	47	36.94	3	2.10	130	43.4	34
2023-24	92	14.13	53	36.74	3	2.09	148	43.8	39
2024-25	103	12.67	60	36.58	3	2.08	166	44.2	43
2025-26	115	11.50	66	36.38	4	2.07	185	44.5	47
2026-27	127	10.56	72	36.18	4	2.06	204	44.7	52
2027-28	140	9.79	79	35.97	5	2.05	223	44.9	57
2028-29	153	9.14	85	35.73	5	2.05	242	45.1	61
Ave. Growth (2019-2029)	14.49%						14.48%		13.07%

Table 1-33: District-wise Sale (GWh), Generation (GWh) and Demand (MW) Forecast (District: Lower Dir)

Year	Energy Sale		Distribution Losses		Transmission Losses		Generation	Load Factor	Peak Demand
	(GWh)	G.R (%)	(GWh)	%	(GWh)	%	(GWh)	%	(MW)
2018-19	526		290	35.56	20	2.41	837	44.2	216
2019-20	534	1.49	321	37.53	19	2.13	874	44.3	225
2020-21	515	-3.54	307	37.34	18	2.12	840	44.2	217
2021-22	507	-1.54	300	37.14	17	2.11	825	44.2	213
2022-23	524	3.31	307	36.94	18	2.10	849	44.2	219
2023-24	542	3.37	315	36.74	18	2.09	875	44.2	226
2024-25	560	3.38	323	36.58	19	2.08	902	44.2	233
2025-26	579	3.44	331	36.38	19	2.07	930	44.3	240
2026-27	600	3.50	340	36.18	20	2.06	960	44.3	247
2027-28	621	3.57	349	35.97	20	2.05	991	44.3	255
2028-29	644	3.64	358	35.73	21	2.05	1023	44.4	263
Ave. Growth (2019-2029)	2.03%						2.02%		1.99%

Table 1-34: District-wise Sale (GWh), Generation (GWh) and Demand (MW) Forecast (District: Abbotabad)

Year	Energy Sale		Distribution Losses		Transmission Losses		Generation	Load Factor	Peak Demand
	(GWh)	G.R (%)	(GWh)	%	(GWh)	%	(GWh)	%	(MW)
2018-19	810		447	35.56	31	2.41	1288	71.2	206
2019-20	803	-0.83	483	37.53	28	2.13	1314	70.9	211
2020-21	799	-0.56	476	37.34	28	2.12	1302	71.0	209
2021-22	803	0.55	474	37.14	28	2.11	1305	71.1	209
2022-23	821	2.23	481	36.94	28	2.10	1330	71.1	214
2023-24	840	2.26	488	36.74	28	2.09	1356	71.0	218
2024-25	859	2.30	495	36.58	29	2.08	1383	71.0	222
2025-26	879	2.33	503	36.38	29	2.07	1411	70.9	227
2026-27	900	2.36	510	36.18	30	2.06	1439	70.9	232
2027-28	921	2.39	518	35.97	30	2.05	1469	70.8	237
2028-29	944	2.42	525	35.73	31	2.05	1499	70.7	242
Ave. Growth (2019-2029)	1.54%						1.53%		1.60%

Table 1-35: District-wise Sale (GWh), Generation (GWh) and Demand (MW) Forecast (District: Haripur)

Year	Energy Sale		Distribution Losses		Transmission Losses		Generation	Load Factor	Peak Demand
	(GWh)	G.R (%)	(GWh)	%	(GWh)	%	(GWh)	%	(MW)
2018-19	1479		816	35.56	57	2.41	2351	59.0	455
2019-20	1363	-7.83	819	37.53	48	2.13	2229	60.5	420
2020-21	1500	10.05	894	37.34	52	2.12	2445	59.6	468
2021-22	2001	33.42	1182	37.14	69	2.11	3252	60.2	617
2022-23	2037	1.80	1193	36.94	69	2.10	3300	60.6	622
2023-24	2078	2.01	1207	36.74	70	2.09	3355	61.0	628
2024-25	2120	2.05	1223	36.58	71	2.08	3415	61.4	635
2025-26	2168	2.25	1240	36.38	72	2.07	3480	61.8	643
2026-27	2221	2.45	1259	36.18	73	2.06	3553	62.2	652
2027-28	2280	2.66	1281	35.97	75	2.05	3636	62.7	662
2028-29	2346	2.88	1304	35.73	76	2.05	3726	63.1	674
Ave. Growth (2019-2029)	4.72%						4.71%		4.01%

Table 1-36: District-wise Sale (GWh), Generation (GWh) and Demand (MW) Forecast (District: Mansehra)

Year	Energy Sale		Distribution Losses		Transmission Losses		Generation	Load Factor	Peak Demand
	(GWh)	G.R (%)	(GWh)	%	(GWh)	%	(GWh)	%	(MW)
2018-19	437		241	35.56	17	2.41	695	52.3	152
2019-20	448	2.55	269	37.53	16	2.13	733	52.5	160
2020-21	442	-1.45	263	37.34	15	2.12	720	52.6	156
2021-22	440	-0.37	260	37.14	15	2.11	715	52.6	155
2022-23	454	3.09	266	36.94	15	2.10	735	52.6	159
2023-24	468	3.11	272	36.74	16	2.09	755	52.6	164
2024-25	483	3.14	278	36.58	16	2.08	777	52.6	169
2025-26	498	3.17	285	36.38	17	2.07	799	52.6	173
2026-27	514	3.20	291	36.18	17	2.06	822	52.6	178
2027-28	530	3.23	298	35.97	17	2.05	846	52.6	183
2028-29	548	3.26	304	35.73	18	2.05	870	52.6	189
Ave. Growth (2019-2029)	2.28%						2.27%		2.20%

Table 1-37: Monthly Peak Demand Forecast (Base Forecast)

Year	July (MW)	August (MW)	September (MW)	October (MW)	November (MW)	December (MW)	January (MW)	February (MW)	March (MW)	April (MW)	May (MW)	June (MW)
2018-19	3292	3375	3167	2571	2238	2409	2468	2257	2163	2236	2784	3057
2019-20	2942	2667	2744	2654	2308	2728	2644	2218	2250	2632	2952	3205
2020-21	3186	2888	2971	2874	2499	2954	2863	2402	2436	2849	3197	3471
2021-22	3374	3058	3146	3043	2646	3128	3032	2543	2580	3017	3385	3675
2022-23	3502	3174	3266	3159	2747	3246	3147	2640	2678	3132	3513	3815
2023-24	3637	3297	3392	3281	2853	3372	3269	2742	2782	3253	3649	3962
2024-25	3781	3427	3526	3410	2965	3505	3398	2850	2891	3381	3793	4119
2025-26	3930	3562	3665	3545	3083	3643	3532	2963	3006	3515	3943	4281
2026-27	4088	3705	3812	3688	3207	3790	3674	3082	3126	3656	4102	4454
2027-28	4256	3857	3968	3839	3338	3945	3825	3208	3255	3806	4270	4636
2028-29	4431	4016	4132	3997	3475	4108	3982	3340	3389	3963	4446	4827

Table 1-38: Monthly Energy Purchased Forecast (Base Forecast)

Year	July GWh	August GWh	September GWh	October GWh	November GWh	December GWh	January GWh	February GWh	March GWh	April GWh	May GWh	June GWh	Total GWh
2018-19	2175	2196	1893	1428	1385	1619	1722	1432	1431	1464	1687	1938	20369
2019-20	2232	2253	1943	1466	1421	1662	1767	1469	1469	1503	1731	1988	20904
2020-21	2402	2425	2091	1578	1530	1789	1902	1581	1581	1617	1863	2140	22499
2021-22	2523	2547	2196	1657	1607	1879	1997	1661	1660	1699	1957	2248	23632
2022-23	2598	2623	2261	1706	1654	1934	2056	1710	1709	1749	2015	2314	24328
2023-24	2676	2702	2329	1757	1704	1993	2118	1761	1761	1802	2075	2384	25061
2024-25	2758	2785	2401	1811	1756	2054	2184	1816	1815	1857	2139	2457	25833
2025-26	2843	2871	2475	1867	1810	2117	2251	1872	1871	1914	2205	2533	26629
2026-27	2933	2961	2552	1926	1867	2184	2321	1930	1930	1974	2274	2613	27466
2027-28	3027	3056	2634	1988	1927	2254	2396	1992	1991	2038	2347	2697	28347
2028-29	3124	3154	2719	2052	1989	2327	2473	2057	2056	2104	2423	2783	29261

Table 1-39: List of Overloaded Substations during Period 2018-19 to 2028-28 Overloading Criterion= 85%

S.No.	Name	Rating KV	Grid #	Total Capacity (MVA)	Total Capacity (MW)	Overloading Criterion (MW)	Overloading Criterion (%)	Year of Overloading	Overloading Status (MW)	Power Factor
1	Abbottabad	132	4	65	58.50	49.73	85.00	2025-26	48.40	0.90
2	Bannu	132	11	106	95.40	81.09	85.00	2024-25	79.90	0.90
3	Chakdara	132	24	66	60.06	51.05	85.00	2018-19	80.50	0.91
4	Charsadda	132	26	106	95.40	81.09	85.00	2018-19	79.00	0.90
5	Jehangira	132	68	78	70.98	60.33	85.00	2024-25	58.70	0.91
6	Mansehra	132	128	92	82.80	70.38	85.00	2018-19	67.90	0.90
7	Mardan-1	220	129	80	72.80	61.88	85.00	2018-19	63.00	0.91
8	Nizampur	132	145	13	11.70	9.95	85.00	2022-23	9.80	0.90
9	Nowshera City	132	150	111	101.01	85.86	85.00	2024-25	83.50	0.91
10	Nowshera Indust	132	151	52	47.32	40.22	85.00	2018-19	39.20	0.91
11	Peshawar Indust	132	162	120	108.00	91.80	85.00	2018-19	94.00	0.90
12	Dargai	132	262	106	97.52	82.89	85.00	2026-27	77.30	0.92
13	Mattani	132	324	78	70.20	59.67	85.00	2018-19	59.60	0.90
14	Peshawar City	132	344	120	108.00	91.80	85.00	2024-25	90.90	0.90
15	Peshawar Fort	132	347	80	72.00	61.20	85.00	2020-21	61.00	0.90
16	Tajazai	66	386	13	11.70	9.95	85.00	2018-19	19.50	0.90
17	Timergara	66	389	19	17.10	14.54	85.00	2027-28	14.50	0.90
18	Peshawar Univer	132	514	146	131.40	111.69	85.00	2023-24	109.50	0.90
19	Hattian	132	518	13	11.96	10.17	85.00	2018-19.	10.50	0.92
20	Pezu	132	596	26	23.40	19.89	85.00	2026-27	19.50	0.90

PESCO

S.No.	Name	Rating KV	Grid #	Total Capacity (MVA)	Total Capacity (MW)	Overloading Criterion (MW)	Overloading Criterion (%)	Year of Overloading	Overloading Status (MW)	Power Factor
21	Kheshki	66	657	3	2.70	2.30	85.00	2022-23	2.20	0.90
22	Sheikh Muhammad	500	671	39	35.10	29.84	85.00	2019-20	29.60	0.90
23	Kurram Garhi P/	11	699	0	0.00	0.00	85.00	2018-19	3.10	0.90
24	Nousery	132	709	13	11.70	9.95	85.00	2018-19	11.80	0.90
25	Jalala	132	757	106	96.46	81.99	85.00	2024-25	81.40	0.91
26	Gurguri	132	783	13	11.70	9.95	85.00	2026-27	9.70	0.90
27	Domail	220	804	66	59.40	50.49	85.00	2018-19	48.00	0.90
28	Jutilasht	132	831	13	11.70	9.95	85.00	2018-19	8.00	0.90
29	Hayatabad	132	834	106	96.46	81.99	85.00	2024-25	79.50	0.91
30	Dalazak	132	865	78	70.20	59.67	85.00	2025-26	57.50	0.90
31	Khwaza Khela	132	877	52	46.80	39.78	85.00	2018-19	39.50	0.90
32	Madyan	132	896	26	23.40	19.89	85.00	2027-28	18.90	0.90
33	Hussai	132	901	78	70.20	59.67	85.00	2021-22	59.00	0.90
34	Sarai Naurang	132	903	52	46.80	39.78	85.00	2018-19	40.50	0.90
35	Katlang	132	906	26	23.40	19.89	85.00	2019-20	19.80	0.90
36	Rajar	132	940	26	23.40	19.89	85.00	2018-19	20.40	0.90
37	Shahi Bagh	220	942	26	23.40	19.89	85.00	2018-19	18.70	0.90
38	Shangla	132	956	21	18.90	16.07	85.00	2027-28	15.80	0.90
39	Tajazai	132	992	52	46.80	39.78	85.00	2027-28	38.40	0.90
40	Barikot	132	1153	26	23.40	19.89	85.00	2021-22	19.50	0.90

Table 1-40: List of Overloaded Substations during Period 2018-19 to 2028-29 Overloading Criterion=100%

S.No.	Name	Rating KV	Grid #	Total Capacity (MVA)	Total Capacity (MW)	Overloading Criterion (MW)	Overloading Criterion (%)	Year of Overloading	Overloading Status (MW)	Power Factor
2	Charsadda	132	26	106	95.40	95.40	100.00	2025-26	93.40	0.90
3	Jehangira	132	68	78	70.98	70.98	100.00	2027-28	68.40	0.91
4	Mansehra	132	128	92	82.80	82.80	100.00	2026-27	81.90	0.90
5	Mardan-1	220	129	80	72.80	72.80	100.00	2027-28	69.70	0.91
6	Nizampur	132	145	13	11.70	11.70	100.00	2027-28	11.70	0.90
7	Nowshera Indust	132	151	52	47.32	47.32	100.00	2025-26	46.90	0.91
8	Peshawar Indust	132	162	120	108.00	108.00	100.00	2026-27	106.40	0.90
9	Mattani	132	324	78	70.20	70.20	100.00	2022-23	69.00	0.90
10	Peshawar Fort	132	347	80	72.00	72.00	100.00	2025-26	71.70	0.90
11	Tajazai	66	386	13	11.70	11.70	100.00	2018-19	19.50	0.90
12	Peshawar Univer	132	514	146	131.40	131.40	100.00	2026-27	127.80	0.90
13	Hattian	132	518	13	11.96	11.96	100.00	2023-24	11.70	0.92
14	Sheikh Muhammad	500	671	39	35.10	35.10	100.00	2024-25	34.00	0.90
15	Kurram Garhi P/	11	699	0	0.00	0.00	100.00	2018-19	3.10	0.90
16	Nousery	132	709	13	11.70	11.70	100.00	2018-19	11.80	0.90
17	Domail	220	804	66	59.40	59.40	100.00	2024-25	58.50	0.90
18	Jutilasht	132	831	13	11.70	11.70	100.00	2019-20	10.10	0.90
19	Khwaza Khela	132	877	52	46.80	46.80	100.00	2023-24	46.40	0.90

PESCO

S.No.	Name	Rating KV	Grid #	Total Capacity (MVA)	Total Capacity (MW)	Overloading Criterion (MW)	Overloading Criterion (%)	Year of Overloading	Overloading Status (MW)	Power Factor
20	Hussai	132	901	78	70.20	70.20	100.00	2025-26	68.70	0.90
21	Sarai Naurang	132	903	52	46.80	46.80	100.00	2022-23	46.80	0.90
22	Katlang	132	906	26	23.40	23.40	100.00	2025-26	23.30	0.90
23	Rajar	132	940	26	23.40	23.40	100.00	2022-23	23.40	0.90
24	Shahi Bagh	220	942	26	23.40	23.40	100.00	2024-25	23.10	0.90
25	Barikot	132	1153	26	23.40	23.40	100.00	2026-27	23.30	0.90

Table 1-41: List of Grids with their Codes and MVA Capacities

Sr. No.	Grid No.	KV	Grid Name	Transformer (MVA) T1	T2	T3	T4	T5	Total (MVA)
1	4	132	Abbottabad	26	13	26	0	0	65
3	14	132	Battal	26	13	26	0	0	65
5	26	132	Charsadda	40	40	26	0	0	106
7	59	132	Haripur	40	26	26	0	0	92
9	70	132	Jamrud	40	40	26	40	0	146
11	111	132	Kohat	40	40	37	26	0	143
13	129	220	Mardan-1	40	40	0	0	0	80
15	150	132	Nowshera City	40	5	40	26	0	111
17	156	132	Prova	13	0	26	0	0	39
19	193	132	Shahi Bagh	26	0	40	40	40	146
21	225	132	AMC Abbottabad	26	26	0	0	0	52
23	239	66	Bandkuri	13	13	0	0	0	26
25	258	132	Daggar	26	26	40	0	0	92

Sr. No.	Grid No.	KV	Grid Name	Transformer (MVA) T1	T2	T3	T4	T5	Total (MVA)
2	11	132	Bannu	0	0	26	40	40	106
4	24	132	Chakdara	0	0	40	26	0	66
6	34	132	D.I KHAN	40	40	40	40	40	200
8	68	132	Jehangira	26	26	26	0	0	78
10	98	132	Karak	26	26	26	0	0	78
12	128	132	Mansehra	26	40	26	0	0	92
14	145	132	Nizampur	13	0	0	0	0	13
16	151	132	Nowshera Industrial	26	26	0	0	0	52
18	162	132	Peshawar Industrial	40	40	40	0	0	120
20	211	132	R.B Tarbela	26	26	13	0	0	65
22	235	66	Badaber	8	10	0	0	0	18
24	254	33	Besham	4	0	0	0	0	4
26	262	132	Dargai	40	26	40	0	0	106

PESCO

Sr. No.	Grid No.	KV	Grid Name	Transformer (MVA)					Total (MVA)
				T1	T2	T3	T4	T5	
27	282	132	Hangu	0	0	26	26	0	52
29	286	66	Havelian	13	13	0	0	0	26
31	312	66	Kuram Garhi	6	13	0	0	0	19
33	340	132	Pabbi	40	40	26	0	0	106
35	346	132	Peshawar Cantt	40	40	26	26	0	132
37	365	132	Shabqadar	13	40	40	26	26	145
39	386	66	Tajazai	13	0	0	0	0	13
41	393	132	Tank	26	40	26	26	0	118
43	460	132	Lachi	26	26	0	0	0	52
45	462	132	Nishat Tarbela	15	13	0	0	0	28
47	466	132	Kulachi	26	0	0	0	0	26
49	514	132	Peshawar University	26	0	40	40	40	146
51	567	132	Tangi	26	40	26	26	0	118
53	596	132	Pezu	13	13	0	0	0	26

Sr. No.	Grid No.	KV	Grid Name	Transformer (MVA)					Total (MVA)
				T1	T2	T3	T4	T5	
28	283	66	Haripur	6	6	13	0	0	25
30	311	132	Kohat	3	6	0	0	0	9
32	324	132	Mattani	0	26	26	26	0	78
34	344	132	Peshawar City	40	40	40	0	0	120
36	347	132	Peshawar Fort	40	40	0	0	0	80
38	384	132	Swabi	26	40	40	26	0	132
40	389	66	Timergara	6	13	0	0	0	19
42	394	132	Tall	40	26	0	0	0	66
44	461	132	Swat	26	40	40	6	26	138
46	464	132	Draban	26	0	0	0	0	26
48	473	132	Muzafar Abad	15	26	13	26	0	80
50	518	132	Hattian	13	0	0	0	0	13
52	580	132	Balakot	26	0	0	0	0	26
54	625	66	Dir	13	6	0	0	0	19

Sr. No.	Grid No.	KV	Grid Name	Transformer (MVA) T1	T2	T3	T4	T5	Total (MVA)
55	627	132	Gadoon Amazai	26	26	26	26	0	104
57	657	66	Kheshki	3	0	0	0	0	3
59	693	132	Mardan-2	40	40	0	0	0	80
61	699	11	Kurram Garhi P/H	0	0	0	0	0	0
63	736	132	Timergara	40	26	13	26	26	131
65	783	132	Gurguri	13	0	0	0	0	13
67	819	132	Sakhi Chashma	26	26	26	0	0	78
69	830	132	Darosh	26	0	0	0	0	26
71	834	132	Hayatabad	40	26	40	0	0	106
73	865	132	Dalazak	26	26	26	0	0	78
75	876	132	Rehman Baba	40	40	26	0	0	106
77	896	132	Madyan	26	0	0	0	0	26
79	903	132	Sarai Naurang	26	26	0	0	0	52
81	910	132	Warsak	26	26	26	0	0	78

Sr. No.	Grid No.	KV	Grid Name	Transformer (MVA) T1	T2	T3	T4	T5	Total (MVA)
56	638	132	Hattar	40	40	40	40	0	160
58	671	500	Sheikh Muhammadi	13	26	0	0	0	39
60	694	132	Gumbat	13	26	0	0	0	39
62	709	132	Nousery	13	0	0	0	0	13
64	757	132	Jalala	40	26	40	0	0	106
66	804	220	Domail	26	40	0	0	0	66
68	829	33	Thakot	4	4	4	0	0	12
70	831	132	Jutilasht	13	0	0	0	0	13
72	857	132	Nathia Gali	13	0	0	0	0	13
74	875	66	Wari	13	13	0	0	0	26
76	877	132	Khwaza Khela	26	26	0	0	0	52
78	901	132	Hussai	26	26	26	0	0	78
80	906	132	Katlang	26	0	0	0	0	26
82	919	132	Oghi	13	26	0	0	0	39

PESCO

Sr. No.	Grid No.	KV	Grid Name	Transformer (MVA)					Total (MVA)
				T1	T2	T3	T4	T5	
83	940	132	Rajar	26	0	0	0	0	26
85	955	33	Pattan	4	0	0	0	0	4
87	992	132	Tajazai	26	26	0	0	0	52
89	1092	132	Gomal University	26	26	0	0	0	52
91	1149	132	Rampura	26	26	0	0	0	52
93	1172	132	Kholian Bala Havelia	40	26	0	0	0	66
95	1181	132	WAPDA House Colony	26	26	0	0	0	52

Sr. No.	Grid No.	KV	Grid Name	Transformer (MVA)					Total (MVA)
				T1	T2	T3	T4	T5	
84	942	220	Shahi Bagh	13	13	0	0	0	26
86	956	132	Shangla	8	13	0	0	0	21
88	1054	132	Kotal Town Kohat	40	26	0	0	0	66
90	1100	132	Dobian	26	26	0	0	0	52
92	1153	132	Barikot	26	0	0	0	0	26
94	1173	132	Mardan-3	40	40	0	0	0	80
96	0	0	0	0	0	0	0	0	0

Table 1-42: Maximum Demand (MW) of Substations (Base Forecast)

S.No	Grid No	Name of Grid Station	KV	Year										
				2018-19	2019-20	2020-21	2021-22	2022-23	2023-24	2024-25	2025-26	2026-27	2027-28	2028-29
1														
2	11	Bannu	132	75.5	80.5	81.5	82.3	74.3	77	79.9	82.8	85.8	88.9	92.1
3	14	Battal	132	21.5	23.1	23.4	23.6	24.5	25.4	26.3	27.3	28.2	29.3	30.3
4	24	Chakdara	132	80.5	81.3	64	63.6	66.4	69.4	72.6	75.9	79.4	83.1	87
5	26	Charsadda	132	79	83.6	85.1	86.7	90.7	85.5	89.4	93.4	97.6	101.9	106.3
6	34	D.I KHAN	132	92.9	96.4	96.6	97	79.8	82.9	86.2	89.5	93	96.7	100.5
7	59	Haripur	132	63.8	64.5	64.4	64.9	56.5	50.5	52.8	55.1	57.6	60.2	62.9
8	68	Jehangira	132	60.1	54.4	51.4	50.5	53.1	55.8	58.7	61.7	64.9	68.4	72
9	70	Jamrud	132	65.9	57.4	49.5	46.7	50.2	54.1	58.1	62.4	67.1	72.2	77.8
10	98	Karak	132	60.1	64.9	55.3	45	46.6	48.3	50.1	51.9	53.7	55.6	57.6
11	111	Kohat	132	82.4	85.7	86.6	87.9	83.4	87.3	91.4	95.7	100.1	104.7	109.5
12	128	Mansehra	132	67.9	70.6	71.2	72.1	75.1	72.6	75.6	78.7	81.9	85.3	88.7
13	129	Mardan-1	220	63	62.7	62	52.7	55.2	57.9	60.6	63.5	66.5	69.7	73
14	137	Muree	132	4.8	5.2	5.2	5.3	5.5	5.7	5.9	6.1	6.3	6.5	6.8
15	145	Nizampur	132	8.6	9.3	9.4	9.5	9.8	10.2	10.5	10.9	11.3	11.7	12.2
16	146	Wah	132	2.8	2.8	2.8	2.8	2.9	3	3.1	3.3	3.4	3.6	3.7
17	150	Nowshera City	132	77.4	74.4	72.8	72.8	76.2	79.8	83.5	87.4	91.6	96	100.5
18	151	Nowshera Indust	132	39.2	41.3	42.9	44.8	48	41.2	44.1	46.9	50	53.1	56.3
19	156	Prova	132	19.1	20.4	20.6	20.8	21.5	22.3	23.2	24	24.9	25.8	26.8
20	162	Peshawar Indust	132	94	97.2	97.5	98.1	101.9	94.9	98.6	102.4	106.4	110.6	114.9

S .No	Grid No	Name of Grid Station	KV	Year 2018-19	2019-20	2020-21	2021-22	2022-23	2023-24	2024-25	2025-26	2026-27	2027-28	2028-29
21	193	Shahi Bagh	132	73.9	77	77.6	78.6	82	72.2	75.3	78.5	81.9	85.4	89
22	211	R.B Tarbela	132	37.3	35.2	34.1	33.8	35.4	37.1	38.9	40.8	42.8	44.9	47.1
23	225	AMC Abbottabad	132	25.5	26.6	26.9	27.3	28.3	29.4	30.5	31.6	32.8	34	35.3
24	235	Badaber	66	14.2	15.2	15.5	15.7	0	0	0	0	0	0	0
25	239	Bandkuri	66	19.1	20.8	21.5	22.1	0	0	0	0	0	0	0
26	254	Besham	33	3.2	3.4	0	0	0	0	0	0	0	0	0
27	258	Daggar	132	59	55.5	53.2	52.5	46	48.3	50.6	53.1	55.7	58.5	61.5
28	262	Dargai	132	73.9	77.1	66.7	62.8	58.2	62.5	67.1	72	77.3	83.1	89.5
29	273	Regi lalma	132	0	0	1.2	2.3	3.5	4.6	5.8	6.9	8	9.1	10.2
30	282	Hangu	132	33.7	36.3	36.8	37.2	38.5	26.2	27.1	28.1	29.1	30.2	31.3
31	283	Haripur	66	15.7	16.4	16.5	16.6	0	0	0	0	0	0	0
32	286	Havelian	66	10.9	11.2	0	0	0	0	0	0	0	0	0
33	311	Kohat	132	1.9	2.1	2.1	2.1	2.2	2.3	2.4	2.4	2.5	2.6	2.7
34	312	Kuram Garhi	66	14.8	15.9	16.1	16.2	16.8	0	0	0	0	0	0
35	324	Mattani	132	59.6	65	66.1	66.6	69	71.5	74	76.7	79.4	82.2	85.1
36	340	Pabbi	132	69.1	73.2	58.4	59	45.9	47.6	49.4	51.2	53.1	55	57
37	344	Peshawar City	132	90.1	94.3	79.9	80.9	84.1	87.4	90.9	94.5	98.2	102.1	106.1
38	346	Peshawar Cantt	132	67.7	70.9	72.6	65.7	68	61.3	63.5	65.7	68	70.3	72.7
39	347	Peshawar Fort	132	57.1	59.8	61	62.4	64.6	66.9	69.3	71.7	74.2	76.8	79.5
40	365	Shabqadar	132	69.6	72.9	73.2	73.5	67.8	63.8	66.3	68.9	71.6	74.4	77.2
41	384	Swabi	132	87.7	93.7	94.8	74.5	68.4	70.9	73.6	76.2	79	81.9	84.9

S .No	Grid No	Name of Grid Station	KV	Year										
				2018-19	2019-20	2020-21	2021-22	2022-23	2023-24	2024-25	2025-26	2026-27	2027-28	2028-29
42	386	Tajazai	66	19.5	20.5	20.6	20.8	21.5	22.3	23.2	24	24.9	25.8	26.8
43	389	Timergara	66	10.6	11.5	11.6	11.7	12.1	12.6	13	13.5	14	14.5	15
44	393	Tank	132	42	45.5	46.2	46.7	48.3	50.1	51.9	53.7	55.6	57.6	59.6
45	394	Tall	132	33.2	35.6	36.2	36.5	37.8	39.2	40.6	42	43.5	45	46.6
46	460	Lachi	132	23.6	25.2	25.4	25.6	26.5	27.5	28.6	29.6	30.7	31.9	33
47	461	Swat	132	87	89.7	89.7	90.1	93.7	84.4	87.7	91.2	94.8	98.7	102.6
48	462	Nishat Tarbela	132	12.5	13.1	13.3	13.5	13.9	14.4	14.9	15.4	16	16.5	17.1
49	463	Chitral H/P	11	0.6	0.6	0.6	0.7	0.7	0.7	0.7	0.8	0.8	0.8	0.8
50	464	Draban	132	13.3	14.4	14.6	14.8	15.3	15.8	16.4	17	17.6	18.2	18.9
51	466	Kulachi	132	11.5	12.5	12.7	12.8	13.3	13.7	14.2	14.7	15.2	15.8	16.3
52	473	Muzafar Abad	132	46.7	47	48.3	49.6	50.9	52.3	53.7	55.1	56.6	58.1	59.6
53	514	Peshawar Univer	132	83.6	91	94.8	98.4	103.9	109.5	115.5	121.6	127.8	134.3	141
54	518	Hattian	132	10.5	10.5	10.8	11.1	11.4	11.7	12	12.4	12.7	13	13.4
55	567	Tangi	132	62.6	67	67.9	68.5	71	73.6	76.3	79.1	82	85	88
56	580	Balakot	132	12.4	13.5	13.7	13.8	14.3	5.5	5.7	5.9	6.1	6.3	6.6
57	596	Pezu	132	15.2	16	16.1	16.2	16.8	17.5	18.1	18.8	19.5	20.2	21
58	625	Dir	66	9.7	10.6	10.8	0	0	0	0	0	0	0	0
59	627	Gadoon Amazai	132	40.8	31.5	26.4	24.5	26.6	28.8	31.1	33.6	36.3	39.3	42.6
60	638	Hattar	132	112.1	81.8	63.5	56.5	62.6	69.4	76.4	84	92.5	101.8	112.1
61	657	Kheshki	66	2	2.1	2.2	2.2	2.2	2.3	2.3	2.4	2.4	2.5	2.6
62	671	Sheikh Muhammad	500	27.2	29.6	30.2	30.5	31.6	32.8	34	35.2	36.5	37.8	39.2

PESCO

S .No	Grid No	Name of Grid Station	KV	Year 2018-19	2019-20	2020-21	2021-22	2022-23	2023-24	2024-25	2025-26	2026-27	2027-28	2028-29
63	678	Garam Chashma P	11	1.6	1.7	1.8	1.8	1.8	1.9	2	2	2.1	2.2	2.3
64	693	Mardan-2	132	50.2	53.7	54.9	56.1	58.6	44.6	46.6	48.7	50.8	53	55.3
65	694	Gumbat	132	18.1	19.7	20.1	20.3	21	21.7	22.5	23.3	24.1	25	25.8
66	699	Kurram Garhi P/	11	3.1	3.4	3.4	3.4	3.6	3.7	3.8	4	4.1	4.3	4.4
67	709	Nousery	132	11.8	11.9	12.2	12.6	12.9	13.2	13.6	14	14.3	14.7	15.1
68	714	Kohat Cement	132	78.5	80.9	80.7	80.4	80.2	79.9	79.7	79.5	79.2	79	78.7
69	716	Locomotive	132	0.7	0.8	0.8	0.8	0.8	0.7	0.7	0.7	0.7	0.7	0.7
70	717	Consumer GS	132	63	65	64.8	64.6	64.4	64.2	64	63.8	63.6	63.4	63.2
71	718	Tarbela P/H	11	3	3.2	3.3	3.3	3.4	3.5	3.7	3.8	3.9	4.1	4.2
72	736	Timergara	132	66.2	71.2	63.7	55.7	57.8	59.9	62.1	64.4	66.7	69.2	71.6
73	744	Chashma	132	3	3.1	3.1	3.1	3.3	3.4	3.5	3.6	3.8	3.9	4.1
74	757	Jalala	132	79.4	82.3	82.5	82.9	75.3	78.3	81.4	84.6	87.9	91.4	95
75	783	Gurguri	132	7.3	7.9	8.1	8.1	8.4	8.7	9	9.4	9.7	10	10.4
76	784	AWT Nizampur	132	59.6	61.5	61.3	61.1	60.9	60.7	60.6	60.4	60.2	60	59.8
77	786	Tarnawa	132	7.3	7.5	7.5	7.5	7.4	7.4	7.4	7.4	7.3	7.3	7.3
78	799	Best Way Cement	132	15	15.5	15.4	15.4	15.3	15.3	15.2	15.2	15.1	15.1	15
79	804	Domail	220	48	51.5	52.2	52.5	54.4	56.4	58.5	60.6	62.8	65.1	67.4
80	819	Sakhi Chashma	132	40.7	41.5	41.3	41.4	43.1	44.8	46.6	48.5	50.4	52.5	54.6
81	829	Thakot	33	7.2	7.7	7.8	0	0	0	0	0	0	0	0
82	830	Darosh	132	2.9	4.5	5.8	7.1	8.6	10.2	11.8	13.5	15.2	16.9	18.8
83	831	Jutilasht	132	8	10.1	11.8	13.4	15.4	17.4	19.5	21.7	23.9	26.2	28.6

S .No	Grid No	Name of Grid Station	KV	Year										
				2018-19	2019-20	2020-21	2021-22	2022-23	2023-24	2024-25	2025-26	2026-27	2027-28	2028-29
84	834	Hayatabad	132	66.2	68.2	68.3	68.9	72.2	75.8	79.5	83.3	87.3	91.4	95.8
85	857	Nathia Gali	132	5.6	6	6.1	6.2	6.4	6.6	6.9	7.1	7.4	7.6	7.9
86	861	Sadi Cement	132	38.6	39.8	39.7	39.6	39.4	39.3	39.2	39.1	39	38.8	38.7
87	865	Dalazak	132	44.5	47.9	48.6	49.1	51	53.1	55.3	57.5	59.8	62.1	64.6
88	875	Wari	66	15.1	16.4	0	0	0	0	0	0	0	0	0
89	876	Rehman Baba	132	57.3	61.4	62.3	63.1	65.3	67.7	70.2	72.8	75.4	78.1	80.9
90	877	Khwaza Khela	132	39.5	42.4	42.9	43.2	44.8	46.4	48.2	49.9	51.8	53.7	55.6
91	896	Madyan	132	9.8	15	14.1	13.8	14.5	15.3	16.1	'17	17.9	18.9	19.9
92	901	Hussai	132	54.8	58.1	58.7	59	61.3	63.7	66.2	68.7	71.4	74.1	76.9
93	903	Sarai Naurang	132	40.5	43.6	44.4	45	46.8	48.6	50.6	52.6	54.7	56.8	59
94	906	Katlang	132	18.4	19.8	20	20.2	20.9	21.7	22.5	23.3	24.1	25	25.9
95	910	Warsak	132	48.4	52.4	53.3	45.4	46.9	48.6	50.3	52.1	53.9	55.8	57.7
96	919	Oghi	132	15.2	16.4	16.7	16.8	17.4	18.1	18.7	19.4	20.1	20.8	21.6
97	940	Rajar	132	20.4	22.1	22.4	22.6	23.4	24.3	25.1	26.1	27	28	29
98	942	Shahi Bagh	220	18.7	20.3	20.6	20.8	21.5	22.3	23.1	24	24.8	25.7	26.6
99	955	Pattan	33	2.2	2.4	2.4	0	0	0	0	0	0	0	0
100	956	Shangla	132	11.5	12.5	12.7	12.8	13.3	13.7	14.2	14.7	15.3	15.8	16.4
101	992	Tajazai	132	37.7	40.7	41.3	41.6	43.1	33.3	34.5	35.8	37.1	38.4	39.8
102	1004	Cherat Cement	132	32	33	32.9	32.8	32.7	32.6	32.5	32.4	32.3	32.2	32
103	1006	Cattar Class	33	1.4	1.4	1.4	1.4	1.4	1.4	1.4	1.4	1.4	1.4	1.4
104	1054	Kotal Town Koha	132	32.9	34.8	35.4	35.9	37.1	38.4	39.7	41.1	42.5	44	45.5

PESCO

S .No	Grid No	Name of Grid Station	KV	Year 2018-19	2019-20	2020-21	2021-22	2022-23	2023-24	2024-25	2025-26	2026-27	2027-28	2028-29
105	1092	Gomal Universit	132	14.5	15.1	15.1	15.1	15.7	16.4	17	17.7	18.4	19.1	19.9
106	1100	Dobian	132	23	25	25.4	25.6	26.5	27.5	28.5	29.5	30.6	31.6	32.8
107	1149	Rampura	132	19.1	19.2	19.8	20.3	20.8	21.4	22	22.6	23.2	23.8	24.4
108	1153	Barikot	132	17.6	19	19.3	19.5	20.2	20.9	21.7	22.5	23.3	24.1	24.9
109	1172	Kholian Bala Ha	132	13	13.8	14	14.3	14.9	15.6	16.3	17.1	17.8	18.6	19.4
110	1173	Mardan-3	132	14	15.1	15.4	15.6	16.2	16.7	17.4	18	18.6	19.3	19.9
111	1178	ZRK	132	13.1	13.5	13.4	13.4	13.3	13.3	13.3	13.2	13.2	13.1	13.1
112	1181	WAPDA House Col	132	8.5	9.3	9.4	9.5	9.9	10.2	10.6	11	11.4	11.8	12.2
113	6666	Taru jabba	132	0	0	31	31.3	32.5	33.7	35	36.4	37.8	39.2	40.7
114	6667	besham132	132	0	0	3.5	3.5	3.7	3.8	3.9	4.1	4.2	4.4	4.5
115	6668	Pattan132	132	0	0	0	2.4	2.5	2.6	2.7	2.8	2.9	3	3.1
116	6669	Sabir Abad	132	0	0	10.6	10.7	11.1	11.5	11.9	12.3	12.8	13.2	13.7
117	6670	Thakot132	132	0	0	0	7.9	8.2	8.5	8.8	9.1	9.4	9.8	10.1
118	6671	Havelian132	132	0	0	11.1	11.2	11.6	12.1	12.6	13	13.5	14.1	14.6
119	6672	Chota Lahor	132	0	0	0	19.2	19.9	20.6	21.3	22.1	22.9	23.8	24.6
120	6673	Kaka Sahib	132	0	0	0	0	0	10.2	10.8	11.6	12.3	13.1	13.9
121	6674	Warsak Road	132	0	0	0	17	17.6	18.2	18.8	19.5	20.2	20.9	21.6
122	6675	Hassan Zai	132	0	0	0	0	8.5	8.8	9.2	9.5	9.9	10.3	10.7
123	6676	Batkhela	132	0	0	15.3	15.2	15.8	16.6	17.3	18.1	18.9	19.8	20.7
124	6677	Bannu-2	132	0	0	0	0	10.9	11.3	11.7	12.2	12.6	13.1	13.5
125	6678	Chirat Industri	132	0	0	0	0	15.2	15.8	16.4	17	17.6	18.3	18.9

S .No	Grid No	Name of Grid Station	KV	Year										
				2018-19	2019-20	2020-21	2021-22	2022-23	2023-24	2024-25	2025-26	2026-27	2027-28	2028-29
126	6679	Behram Killi	132	0	0	0	9.6	10	10.5	11	11.5	12.1	12.6	13.3
127	6680	Munda-Jandol	132	0	0	0	8.5	8.8	9.2	9.5	9.8	10.2	10.6	11
128	6681	Lal Qilla	132	0	0	8.5	8.5	8.8	9.2	9.5	9.8	10.2	10.6	11
129	6682	D.I Khan-2	132	0	0	0	0	12.6	13.1	13.6	14.2	14.7	15.3	15.9
130	6683	Naguman	132	0	0	0	0	0	20	20.8	21.7	22.6	23.5	24.5
131	6684	Baja Bam Khel	132	0	0	0	0	8.8	9.1	9.4	9.8	10.1	10.5	10.9
132	6685	Garhi Habib Ull	132	0	0	0	0	0	9.4	9.7	10	10.4	10.8	11.2
133	6686	Lund Khwar	132	0	0	0	0	10.8	11.2	11.7	12.1	12.6	13.1	13.6
134	6687	Manga Dargai	132	0	0	0	0	0	9.3	9.7	10.2	10.6	11.1	11.6
135	6688	Nawan Killi	132	0	0	0	12.7	13.2	13.6	14.1	14.7	15.2	15.8	16.3
136	6689	Mardan-4	132	0	0	0	0	0	16.6	17.4	18.1	18.9	19.7	20.6
137	6690	Doaba	132	0	0	0	0	0	13.7	14.2	14.7	15.3	15.8	16.4
138	6691	Shakardara	132	0	0	0	0	8.6	9	9.5	9.9	10.4	10.9	11.3
139	6692	Bara Road	132	0	0	0	0	0	20	20.8	21.5	22.3	23.2	24
140	6693	Dargai-2	132	0	0	0	0	17.7	18.8	19.9	21	22.3	23.6	25.1
141	6694	Salar Zai	132	0	0	0	0	9	9.5	9.9	10.4	10.9	11.5	12.1
142	6695	Kabal	132	0	0	0	0	0	13	13.5	14.1	14.6	15.2	15.8
143	6696	Khan pur	132	0	0	0	0	11.3	11.8	12.4	12.9	13.5	14.1	14.8
144	6697	Lora	132	0	0	0	0	0	8.6	9	9.4	9.8	10.3	10.7
145	6698	Kala Dakha	132	0	0	0	0	0	5.6	5.8	6	6.3	6.5	6.8
146	6699	Lakkk-2	132	0	0	0	0	0	11.3	11.7	12.1	12.6	13	13.5

PESCO

S .No	Grid No	Name of Grid Station	KV	Year										
				2018-19	2019-20	2020-21	2021-22	2022-23	2023-24	2024-25	2025-26	2026-27	2027-28	2028-29
147	6700	Haripur-2	132	0	0	0	0	17.2	17.9	18.6	19.3	20	20.8	21.6
148	6701	Kuram Garhi132	132	0	0	0	0	0	17.4	18.1	18.7	19.4	20.1	20.9
149	6702	Badaber132	132	0	0	0	0	16.2	16.8	17.3	17.9	18.5	19.2	19.8
150	6703	Bandkuri132	132	0	0	0	0	23.3	24.6	25.9	27.3	28.7	30.1	31.6
151	6704	Dir132	132	0	0	0	10.8	11.2	11.6	12.1	12.5	12.9	13.4	13.9
152	6705	Wari132	132	0	0	16.6	16.8	17.4	18	18.7	19.3	20	20.8	21.5
153	6706	Jalozai	132	0	0	9.4	18.9	28.9	39.3	50.1	61.1	72.6	84.4	96.5
154	6707	DHA	132	0	0	20.6	41.4	63.4	86	109.5	133.7	158.7	184.6	211.2
155	6708	Paradise City N	132	0	0	2.7	5.5	8.4	11.4	14.5	17.7	21	24.4	27.9
156	6709	HATTAR EZ	132	0	0	63.8	190.9	190.3	189.7	189.2	188.6	188	187.4	186.7
157	6710	Rashakai EZ	132	0	0	255.3	318.2	317.2	316.2	315.4	314.4	313.4	312.4	311.2
158	0	TOTAL DISCO:	0	3966.4	4097.4	4440.1	4686.3	4882.1	5088.7	5304.4	5526.7	5758.3	6001.3	6252.8

Table 1-42: Family of Grids (Existing, Proposed & Transit Grid)

S .No	Group No	Grid No	Name of Grid Station	KV.	Year										
					2018-19	2019-20	2020-21	2021-22	2022-23	2023-24	2024-25	2025-26	2026-27	2027-28	2028-29
1	1	6666	Taru jabba	132	0	0	0	0	0	0	0	0	0	0	0
2	1	340	Pabbi	132	40.9	43.4	43.9	44.3	45.9	47.6	49.4	51.2	53.1	55	57
3	1	8888	Pabbi_Taru jabb	132	14.6	15.4	15.6	15.7	16.3	16.9	17.5	18.2	18.9	19.6	20.3
4	2	6666	Taru jabba	132	0	0	0	0	0	0	0	0	0	0	0
5	2	344	Peshawar City	132	75.5	79.1	79.9	80.9	84.1	87.4	90.9	94.5	98.2	102.1	106.1
6	2	8889	peshawar city_T	132	14.5	15.2	15.4	15.6	16.2	16.8	17.5	18.2	18.9	19.7	20.4
7	3	6667	besham132	132	0	0	0	0	0	0	0	0	0	0	0
8	3	254	Besham	33	0	0	0	0	0	0	0	0	0	0	0
9	3	8890	Besham_besham13	132	3.2	3.4	3.5	3.5	3.7	3.8	3.9	4.1	4.2	4.4	4.5
10	4	6668	Pattan132	132	0	0	0	0	0	0	0	0	0	0	0
11	4	955	Pattan	33	0	0	0	0	0	0	0	0	0	0	0
12	4	8891	Pattan_Pattan13	132	2.2	2.4	2.4	2.4	2.5	2.6	2.7	2.8	2.9	3	3.1
13	5	6669	Sabir Abad	132	0	0	0	0	0	0	0	0	0	0	0
14	5	98	Karak	132	40.7	44	44.7	45	46.6	48.3	50.1	51.9	53.7	55.6	57.6
15	5	8892	Karak_Sabir Aba	132	9.7	10.5	10.6	10.7	11.1	11.5	11.9	12.3	12.8	13.2	13.7
16	6	6670	Thakot132	132	0	0	0	0	0	0	0	0	0	0	0
17	6	829	Thakot	33	0	0	0	0	0	0	0	0	0	0	0

PESCO

S .No	Group No	Grid No	Name of Grid Station	KV	Year										
					2018-19	2019-20	2020-21	2021-22	2022-23	2023-24	2024-25	2025-26	2026-27	2027-28	2028-29
18	6	8893	Thakot_Thakot13	132	7.2	7.7	7.8	7.9	8.2	8.5	8.8	9.1	9.4	9.8	10.1
19	7	6671	Havelian132	132	0	0	0	0	0	0	0	0	0	0	0
20	7	286	Havelian	66	0.1	0.1	0.1	0.1	0.1	0.1	0.1	0.1	0.1	0.1	0.1
21	7	8894	Havelian_Haveli	132	10.8	11.1	11.1	11.2	11.6	12.1	12.6	13	13.5	14.1	14.6
22	8	6672	Chota Lahor	132	0	0	0	0	0	0	0	0	0	0	0
23	8	98	Karak	132	40.7	44	44.7	45	46.6	48.3	50.1	51.9	53.7	55.6	57.6
24	8	8895	Karak_Siraj Bab	132	9.7	10.5	10.6	10.7	11.1	11.5	11.9	12.3	12.8	13.2	13.7
25	9	6672	Chota Lahor	132	0	0	0	0	0	0	0	0	0	0	0
26	9	384	Swabi	132	60.6	64.6	65.4	66	68.4	70.9	73.6	76.2	79	81.9	84.9
27	9	8896	Swabi_Chota Lah	132	7.8	8.3	8.4	8.5	8.8	9.1	9.4	9.8	10.1	10.5	10.9
28	10	6673	Kaka Sahib	132	0	0	0	0	0	0	0	0	0	0	0
29	10	151	Nowshera Indust	132	31.5	33.2	34.5	36	38.5	41.2	44.1	46.9	50	53.1	56.3
30	10	8897	Nowshera Indust	132	7.7	8.2	8.5	8.8	9.5	10.2	10.8	11.6	12.3	13.1	13.9
31	11	6674	Warsak Road	132	0	0	0	0	0	0	0	0	0	0	0
32	11	346	Peshawar Cantt	132	52.2	54.7	55.9	57.2	59.2	61.3	63.5	65.7	68	70.3	72.7
33	11	8898	Peshawar Cantt_	132	7.8	8.1	8.3	8.5	8.8	9.1	9.5	9.8	10.1	10.5	10.8
34	12	6674	Warsak Road	132	0	0	0	0	0	0	0	0	0	0	0
35	12	910	Warsak	132	40.8	44.2	44.9	45.4	46.9	48.6	50.3	52.1	53.9	55.8	57.7

S .No	Group No	Grid No	Name of Grid Station	KV	Year										
					2018-19	2019-20	2020-21	2021-22	2022-23	2023-24	2024-25	2025-26	2026-27	2027-28	2028-29
36	12	8899	Warsak_Warsak R	132	7.6	8.2	8.4	8.4	8.7	9	9.4	9.7	10	10.4	10.8
37	13	6675	Hassan Zai	132	0	0	0	0	0	0	0	0	0	0	0
38	13	365	Shabqadar	132	56.1	58.7	58.9	59.2	61.5	63.8	66.3	68.9	71.6	74.4	77.2
39	13	8900	Shabqadar_Hassa	132	7.7	8.1	8.1	8.2	8.5	8.8	9.2	9.5	9.9	10.3	10.7
40	14	6676	Batkhela	132	0	0	0	0	0	0	0	0	0	0	0
41	14	24	Chakdara	132	65	65.7	64	63.6	66.4	69.4	72.6	75.9	79.4	83.1	87
42	14	8901	Chakdara_Batkhe	132	15.5	15.7	15.3	15.2	15.8	16.6	17.3	18.1	18.9	19.8	20.7
43	15	6677	Bannu-2	132	0	0	0	0	0	0	0	0	0	0	0
44	15	11	Bannu	132	65.8	70.2	71.1	71.7	74.3	77	79.9	82.8	85.8	88.9	92.1
45	15	8902	Bannu_Bannu-2	132	9.7	10.3	10.4	10.5	10.9	11.3	11.7	12.2	12.6	13.1	13.5
46	16	6678	Chirat Industri	132	0	0	0	0	0	0	0	0	0	0	0
47	16	340	Pabbi	132	40.9	43.4	43.9	44.3	45.9	47.6	49.4	51.2	53.1	55	57
48	16	8903	Pabbi_Chirat In	132	13.6	14.4	14.6	14.7	15.2	15.8	16.4	17	17.6	18.3	18.9
49	17	6679	Behram Killi	132	0	0	0	0	0	0	0	0	0	0	0
50	17	129	Mardan-1	220	53.3	53	52.5	52.7	55.2	57.9	60.6	63.5	66.5	69.7	73
51	17	8904	Mardan-1_Behram	132	9.7	9.6	9.5	9.6	10	10.5	11	11.5	12.1	12.6	13.3
52	18	6680	Munda-Jandol	132	0	0	0	0	0	0	0	0	0	0	0
53	18	736	Timergara	132	50.7	54.5	55.3	55.7	57.8	59.9	62.1	64.4	66.7	69.2	71.6

S.No	Group No	Grid No	Name of Grid Station	KV	Year 2018-19	2019-20	2020-21	2021-22	2022-23	2023-24	2024-25	2025-26	2026-27	2027-28	2028-29
54	18	8905	Timergara_Munda	132	7.8	8.3	8.5	8.5	8.8	9.2	9.5	9.8	10.2	10.6	11
55	19	6681	Lal Qilla	132	0	0	0	0	0	0	0	0	0	0	0
56	19	736	Timergara	132	50.7	54.5	55.3	55.7	57.8	59.9	62.1	64.4	66.7	69.2	71.6
57	19	8906	Timergara_Lal Q	132	7.8	8.3	8.5	8.5	8.8	9.2	9.5	9.8	10.2	10.6	11
58	20	6682	D.I Khan-2	132	0	0	0	0	0	0	0	0	0	0	0
59	20	34	D.I KHAN	132	73.6	76.3	76.5	76.8	79.8	82.9	86.2	89.5	93	96.7	100.5
60	20	8907	D.I KHAN_D.I Kh	132	11.6	12.1	12.1	12.1	12.6	13.1	13.6	14.2	14.7	15.3	15.9
61	21	6683	Naguman	132	0	0	0	0	0	0	0	0	0	0	0
62	21	365	Shabqadar	132	56.1	58.7	58.9	59.2	61.5	63.8	66.3	68.9	71.6	74.4	77.2
63	21	8908	Shabqadar_Nagum	132	5.8	6.1	6.1	6.1	6.4	6.6	6.9	7.1	7.4	7.7	8
64	22	6683	Naguman	132	0	0	0	0	0	0	0	0	0	0	0
65	22	193	Shahi Bagh	132	62.4	64.9	65.5	66.3	69.2	72.2	75.3	78.5	81.9	85.4	89
66	22	8909	Shahi Bagh_Nagu	132	11.6	12	12.1	12.3	12.8	13.4	14	14.6	15.2	15.8	16.5
67	23	6684	Baja Bam Khel	132	0	0	0	0	0	0	0	0	0	0	0
68	23	384	Swabi	132	60.6	64.6	65.4	66	68.4	70.9	73.6	76.2	79	81.9	84.9
69	23	8910	Swabi_Baja Bam	132	7.8	8.3	8.4	8.5	8.8	9.1	9.4	9.8	10.1	10.5	10.9
70	24	6685	Garhi Habib Ull	132	0	0	0	0	0	0	0	0	0	0	0
71	24	580	Balakot	132	4.6	5	5.1	5.1	5.3	5.5	5.7	5.9	6.1	6.3	6.6

S .No	Group No	Grid No	Name of Grid Station	KV	Year										
					2018-19	2019-20	2020-21	2021-22	2022-23	2023-24	2024-25	2025-26	2026-27	2027-28	2028-29
72	24	8911	Balakot_Garhi H	132	7.8	8.5	8.6	8.7	9	9.4	9.7	10	10.4	10.8	11.2
73	25	6686	Lund Khwar	132	0	0	0	0	0	0	0	0	0	0	0
74	25	757	Jalala	132	69.5	72	72.1	72.5	75.3	78.3	81.4	84.6	87.9	91.4	95
75	25	8912	Jalala_Lund Khw	132	10	10.3	10.3	10.4	10.8	11.2	11.7	12.1	12.6	13.1	13.6
76	26	6687	Manga Dargai	132	0	0	0	0	0	0	0	0	0	0	0
77	26	26	Charsadda	132	71.2	75.4	76.7	78.1	81.7	85.5	89.4	93.4	97.6	101.9	106.3
78	26	8913	Charsadda_Manga	132	7.8	8.2	8.4	8.5	8.9	9.3	9.7	10.2	10.6	11.1	11.6
79	27	6688	Nawan Killi	132	0	0	0	0	0	0	0	0	0	0	0
80	27	384	Swabi	132	60.6	64.6	65.4	66	68.4	70.9	73.6	76.2	79	81.9	84.9
81	27	8914	Swabi_Nawan Kil	132	11.6	12.4	12.6	12.7	13.2	13.6	14.1	14.7	15.2	15.8	16.3
82	28	6689	Mardan-4	132	0	0	0	0	0	0	0	0	0	0	0
83	28	693	Mardan-2	132	36.6	39.1	40	40.9	42.7	44.6	46.6	48.7	50.8	53	55.3
84	28	8915	Mardan-2_Mardan	132	13.6	14.6	14.9	15.2	15.9	16.6	17.4	18.1	18.9	19.7	20.6
85	29	6690	Doaba	132	0	0	0	0	0	0	0	0	0	0	0
86	29	282	Hangu	132	22.1	23.8	24.2	24.4	25.3	26.2	27.1	28.1	29.1	30.2	31.3
87	29	8916	Hangu_Doaba	132	11.6	12.5	12.7	12.8	13.2	13.7	14.2	14.7	15.3	15.8	16.4
88	30	6691	Shakardara	132	0	0	0	0	0	0	0	0	0	0	0
89	30	111	Kohat	132	74.7	77.7	78.5	79.6	83.4	87.3	91.4	95.7	100.1	104.7	109.5

PESCO

S No	Group No	Grid No	Name of Grid Station	KV	Year										
					2018-19	2019-20	2020-21	2021-22	2022-23	2023-24	2024-25	2025-26	2026-27	2027-28	2028-29
90	30	8917	Kohat_Shakardar	132	7.7	8.1	8.1	8.2	8.6	9	9.5	9.9	10.4	10.9	11.3
91	31	6692	Bara Road	132	0	0	0	0	0	0	0	0	0	0	0
92	31	346	Peshawar Cantt	132	52.2	54.7	55.9	57.2	59.2	61.3	63.5	65.7	68	70.3	72.7
93	31	8918	Peshawar Cantt_	132	7.8	8.1	8.3	8.5	8.8	9.1	9.5	9.8	10.1	10.5	10.8
94	32	6692	Bara Road	132	0	0	0	0	0	0	0	0	0	0	0
95	32	162	Peshawar Indust	132	84.3	87.2	87.4	88	91.4	94.9	98.6	102.4	106.4	110.6	114.9
96	32	8919	Peshawar Indust	132	9.7	10	10	10.1	10.5	10.9	11.3	11.7	12.2	12.7	13.2
97	33	6693	Dargai-2	132	0	0	0	0	0	0	0	0	0	0	0
98	33	34	D.I KHAN	132	73.6	76.3	76.5	76.8	79.8	82.9	86.2	89.5	93	96.7	100.5
99	33	8920	D.I KHAN_Panyal	132	7.8	8	8.1	8.1	8.4	8.7	9.1	9.4	9.8	10.2	10.6
100	34	6693	Dargai-2	132	0	0	0	0	0	0	0	0	0	0	0
101	34	262	Dargai	132	63.2	66.4	57.5	54.1	58.2	62.5	67.1	72	77.3	83.1	89.5
102	34	8921	Dargai_Dargai-2	132	10.7	10.7	9.2	8.6	9.3	10	10.8	11.6	12.5	13.4	14.5
103	35	6694	Salar Zai	132	0	0	0	0	0	0	0	0	0	0	0
104	35	258	Daggar	132	49.4	46.4	44.5	43.9	46	48.3	50.6	53.1	55.7	58.5	61.5
105	35	8922	Daggar_Salar Za	132	9.7	9.1	8.7	8.6	9	9.5	9.9	10.4	10.9	11.5	12.1
106	36	6695	Kabal	132	0	0	0	0	0	0	0	0	0	0	0
107	36	461	Swat	132	75.4	77.7	77.7	78.1	81.2	84.4	87.7	91.2	94.8	98.7	102.6

S .No	Group No	Grid No	Name of Grid Station	KV	Year										
					2018-19	2019-20	2020-21	2021-22	2022-23	2023-24	2024-25	2025-26	2026-27	2027-28	2028-29
108	36	8923	Swat_Kabal	132	11.6	12	12	12	12.5	13	13.5	14.1	14.6	15.2	15.8
109	37	6696	Khan pur	132	0	0	0	0	0	0	0	0	0	0	0
110	37	59	Haripur	132	45.4	45.9	45.8	46.2	48.3	50.5	52.8	55.1	57.6	60.2	62.9
111	37	8924	Haripur_Khan pu	132	10.6	10.8	10.7	10.8	11.3	11.8	12.4	12.9	13.5	14.1	14.8
112	38	6697	Lora	132	0	0	0	0	0	0	0	0	0	0	0
113	38	59	Haripur	132	45.4	45.9	45.8	46.2	48.3	50.5	52.8	55.1	57.6	60.2	62.9
114	38	8925	Haripur_Lora	132	7.7	7.8	7.8	7.9	8.2	8.6	9	9.4	9.8	10.3	10.7
115	39	6698	Kala Dakha	132	0	0	0	0	0	0	0	0	0	0	0
116	39	128	Mansehra	132	63.1	65.6	66.1	67	69.7	72.6	75.6	78.7	81.9	85.3	88.7
117	39	8926	Mansehra_Kala D	132	4.8	5	5.1	5.1	5.4	5.6	5.8	6	6.3	6.5	6.8
118	40	6699	Lakkk-2	132	0	0	0	0	0	0	0	0	0	0	0
119	40	992	Tajazai	132	28.2	30.4	30.8	31.1	32.2	33.3	34.5	35.8	37.1	38.4	39.8
120	40	8927	Tajazai_Lakkk-2	132	9.6	10.3	10.4	10.5	10.9	11.3	11.7	12.1	12.6	13	13.5
121	41	6700	Haripur-2	132	0	0	0	0	0	0	0	0	0	0	0
122	41	283	Haripur	66	0	0	0	0	0	0	0	0	0	0	0
123	41	8928	Haripur_Haripur	132	15.7	16.4	16.5	16.6	17.2	17.9	18.6	19.3	20	20.8	21.6
124	42	6701	Kuram Garhi132	132	0	0	0	0	0	0	0	0	0	0	0
125	42	312	Kuram Garhi	66	0	0	0	0	0	0	0	0	0	0	0

S .No	Group No	Grid No	Name of Grid Station	KV	Year										
					2018-19	2019-20	2020-21	2021-22	2022-23	2023-24	2024-25	2025-26	2026-27	2027-28	2028-29
126	42	8929	Kuram Garhi_Kur	132	14.8	15.9	16.1	16.2	16.8	17.4	18.1	18.7	19.4	20.1	20.9
127	43	6702	Badaber132	132	0	0	0	0	0	0	0	0	0	0	0
128	43	235	Badaber	66	0	0	0	0	0	0	0	0	0	0	0
129	43	8930	Badaber_Badaber	132	14.2	15.2	15.5	15.7	16.2	16.8	17.3	17.9	18.5	19.2	19.8
130	44	6703	Bandkuri132	132	0	0	0	0	0	0	0	0	0	0	0
131	44	239	Bandkuri	66	0	0	0	0	0	0	0	0	0	0	0
132	44	8931	Bandkuri_Bandku	132	19.1	20.8	21.5	22.1	23.3	24.6	25.9	27.3	28.7	30.1	31.6
133	45	6704	Dir132	132	0	0	0	0	0	0	0	0	0	0	0
134	45	625	Dir	66	0	0	0	0	0	0	0	0	0	0	0
135	45	8932	Dir_Dir132	132	9.7	10.6	10.7	10.8	11.2	11.6	12.1	12.5	12.9	13.4	13.9
136	46	6705	Wari132	132	0	0	0	0	0	0	0	0	0	0	0
137	46	875	Wari	66	0	0	0	0	0	0	0	0	0	0	0
138	46	8933	Wari_Wari132	132	15.1	16.4	16.6	16.8	17.4	18	18.7	19.3	20	20.8	21.5
	0	0	Total DISCO:	0	2397.8	2509.8	2518.3	2537.3	2641.6	2750.8	2865.5	2982.5	3105	3233.9	3366.3

Table 1-43: Category-wise Energy (kWh) and Maximum Demand (kW) of Substations for Year 2027-2 (Base Forecast)

SR No.	Grid Number	Name of Grid Station	kV	Unit	Domestic	Commercial	Public Lighting	Small Industry	M&L Industries	Tubewell Private	Tubewell Public	Bulk	Traction	Total of Grid Station	Power Factor (%)	Reactive Power (Mvar)
1	6707	DHA	132	kWh	323337	36313	0	0	0	0	0	0	0	359650	0.90	55.00
				kW	105459	13818	0	0	0	0	0	0	0	113313		
2	225	AMC Abbottabad	132	kWh	176462	36712	48	2728	6014	45	0	24698	0	246707	0.90	19.00
				kW	28777	5987	18	249	1087	5	0	4572	0	38661		
3	784	AWT Nizampur	132	kWh	0	0	0	0	280312	0	0	0	0	280312	0.93	32.00
				kW	0	0	0	0	79998	0	0	0	0	79998		
4	4	Abbottabad	66	kWh	262952	59149	682	2011	6581	114	0	21475	0	352963	0.90	29.00
				kW	43503	10231	259	286	1878	22	0	6127	0	59191		
5	6702	Badaber132	132	kWh	18798	2258	0	124	54	1300	0	12604	0	35138	0.90	11.00
				kW	17882	1171	0	40	15	519	0	3596	0	22063		
6	6684	Baja Bam Khel	132	kWh	35823	4052	36	698	702	523	0	0	0	41834	0.90	6.00
				kW	11052	1101	14	99	200	139	0	0	0	11976		
7	580	Balakot	132	kWh	29744	3742	0	73	33	0	0	0	0	33593	0.90	4.00
				kW	7074	949	0	10	10	0	0	0	0	7239		
8	239	Bandkuri	66	kWh	0	0	0	0	326	0	0	0	0	326	0.93	0.00
				kW	0	0	0	0	0	0	0	0	0	0		
9	6703	Bandkuri132	132	kWh	122286	6043	0	5416	1677	3939	0	0	0	139360	0.90	16.00
				kW	32464	1725	0	692	478	629	0	0	0	32390		
10	11	Bannu	132	kWh	146292	19191	0	4961	5423	1793	0	2201	0	179860	0.90	49.00
				kW	92778	9128	0	1866	1548	843	0	629	0	101451		
11	6677	Bannu-2	132	kWh	21514	2822	0	730	797	264	0	324	0	26450	0.90	7.00
				kW	13644	1342	0	274	227	124	0	90	0	14916		

SR No.	Grid Number	Name of Grid Station	kV	Unit	Domestic	Commercial	Public Lighting	Small Industry	M&L Industries	Tubewell Private	Tubewell Public	Bulk	Traction	Total of Grid Station	Power Factor (%)	Reactive Power (Mvar)
12	6692	Bara Road	132	kWh	64532	20657	731	936	2496	35	0	12441	0	101828	0.90	13.00
				kW	18047	5015	278	140	713	9	0	3549	0	26365		
13	1153	Barikot	132	kWh	80301	5101	0	741	380	3230	0	0	0	89753	0.90	13.00
				kW	29570	2008	0	95	109	645	0	0	0	27563		
14	6676	Batkhela	132	kWh	72767	8308	3	613	12094	851	0	437	0	95073	0.90	11.00
				kW	18459	2206	1	91	3198	151	0	126	0	21810		
15	14	Battal	132	kWh	87429	6923	0	1517	1617	0	0	83	0	97569	0.90	16.00
				kW	34415	1882	0	323	462	0	0	21	0	33393		
16	6679	Behram Killi	132	kWh	47762	9792	474	735	5074	336	0	165	0	64337	0.90	7.00
				kW	10905	1832	180	94	1448	54	0	51	0	13835		
17	799	Best Way Cement	33	kWh	0	0	0	0	70499	0	0	0	0	70499	0.93	8.00
				kW	0	0	0	0	20119	0	0	0	0	20119		
18	1006	Cattar Class	132	kWh	0	0	0	0	0	0	0	6475	0	6475	0.92	1.00
				kW	0	0	0	0	0	0	0	1846	0	1847		
19	24	Chakdara	33	kWh	305168	34841	14	2569	50719	3571	0	1831	0	398713	0.90	44.00
				kW	77414	9249	5	382	13416	634	0	523	0	91461		
20	26	Charsadda	132	kWh	198175	37133	207	1937	11277	1140	0	171	0	250041	0.90	55.00
				kW	94262	20185	79	399	3218	304	0	52	0	112574		
21	744	Chashma	132	kWh	19336	1043	0	562	798	657	0	0	0	22396	0.90	2.00
				kW	4505	248	0	80	228	175	0	0	0	4450		
22	1004	Cherat Cement	132	kWh	0	0	0	0	281578	0	0	0	0	281578	0.93	17.00
				kW	0	0	0	0	42881	0	0	0	0	42881		
23	6678	Chirat Industrial	132	kWh	50802	6256	0	795	1662	594	0	2783	0	62891	0.90	10.00
				kW	19331	2232	0	113	474	158	0	792	0	20789		

SR No.	Grid Number	Name of Grid Station	kV	Unit	Domestic	Commercial	Public Lighting	Small Industry	M&L Industries	Tubewell Private	Tubewell Public	Bulk	Traction	Total of Grid Station	Power Factor (%)	Reactive-Power (Mvar)
24	463	Chitral H/P	132	kWh	2345	661	0	20	0	0	0	39	0	3065	0.90	0.00
				kW	765	251	0	3	0	0	0	11	0	927		
25	6672	Chota Lahor	11	kWh	62031	5630	36	1611	1046	854	0	0	0	71208	0.90	13.00
				kW	26798	1769	14	308	298	249	0	0	0	27122		
26	717	Consumer GS	132	kWh	0	0	0	0	296143	0	0	0	0	296143	0.93	33.00
				kW	0	0	0	0	84516	0	0	0	0	84516		
27	34	D.I KHAN	132	kWh	355035	32047	8	4415	19036	749	0	8628	0	419918	0.90	53.00
				kW	96498	9627	3	706	5433	199	0	2461	0	109181		
28	6682	D.I Khan-2	132	kWh	56132	5067	1	698	3010	118	0	1364	0	66390	0.90	8.00
				kW	15257	1522	0	112	859	32	0	387	0	17260		
29	258	Daggar	132	kWh	197567	14108	0	2748	46753	780	0	0	0	261955	0.91	29.00
				kW	56383	4474	0	390	13343	208	0	0	0	63579		
30	865	Dalazak	132	kWh	141399	10277	9	432	4896	113	0	0	0	157126	0.90	34.00
				kW	76864	3910	4	79	1398	30	0	0	0	69942		
31	262	Dargai	132	kWh	205060	18951	57	1309	218052	4214	0	1749	0	449393	0.92	35.00
				kW	39014	3606	22	186	47078	1122	0	500	0	82375		
32	6693	Dargai-2	132	kWh	68165	6219	9	662	34698	711	0	1171	0	111635	0.91	11.00
				kW	16020	1555	4	102	8575	189	0	335	0	24708		
33	830	Darosh	132	kWh	62555	6120	0	43	0	0	0	0	0	68718	0.90	6.00
				kW	13224	1664	0	7	0	0	0	0	0	13405		
34	625	Dir	132	kWh	0	0	0	167	0	0	0	0	0	167	0.90	0.00
				kW	0	0	0	24	0	0	0	0	0	21		
35	6704	Dir132	66	kWh	69904	4515	0	0	105	0	0	0	0	74524	0.90	7.00
				kW	15960	1031	0	0	30	0	0	0	0	15319		

SR No.	Grid Number	Name of Grid Station	kV	Unit	Domestic	Commercial	Public Lighting	Small Industry	M&L Industries	Tubewell Private	Tubewell Public	Bulk	Traction	Total of Grid Station	Power Factor (%)	Reactive Power (Mvar)
36	6690	Doaba	132	kWh	47243	4238	7	429	449	279	0	875	0	53522	0.90	9.00
				kW	17977	1561	3	91	128	74	0	245	0	18072		
37	1100	Dobian	132	kWh	67995	2027	0	785	92266	723	0	0	0	163797	0.92	15.00
				kW	40853	1157	0	251	130	193	0	0	0	36196		
38	804	Domail	132	kWh	107525	4363	0	5642	4024	2331	0	39	0	123923	0.90	36.00
				kW	81830	2490	0	1443	1149	466	0	11	0	74280		
39	464	Draban	220	kWh	41357	1439	0	1980	369	170	0	0	0	45315	0.90	10.00
				kW	23605	498	0	281	105	45	0	0	0	20855		
40	627	Gadoon Amazai	132	kWh	65705	3011	0	1545	117106	1694	0	0	0	189061	0.92	16.00
				kW	14152	1146	0	659	27756	902	0	0	0	37923		
41	678	Garam Chashma P/H	132	kWh	2835	96	0	0	0	0	0	0	0	2931	0.90	1.00
				kW	2697	92	0	0	0	0	0	0	0	2509		
42	6685	Garhi Habib Ullah	11	kWh	50629	6369	0	125	56	0	0	0	0	57179	0.90	6.00
				kW	12041	1616	0	18	16	0	0	0	0	12321		
43	1092	Gomal University	132	kWh	40800	2572	0	690	4141	607	0	0	0	48810	0.90	10.00
				kW	20250	979	0	98	1181	162	0	0	0	21537		
44	694	Gumbat	132	kWh	68093	2745	0	284	20	1893	0	0	0	73036	0.90	14.00
				kW	31093	1424	0	121	5	1009	0	0	0	28604		
45	783	Gurguri	132	kWh	13924	261	0	41	0	41	0	0	0	14268	0.90	6.00
				kW	13246	249	0	13	0	17	0	0	0	11496		
46	6709	HATTAR EZ	132	kWh	0	0	0	0	1313219	0	0	0	0	1313219	0.93	99.00
				kW	0	0	0	0	249851	0	0	0	0	249851		
47	282	Hangu	132	kWh	90156	8088	14	819	857	533	0	1670	0	102137	0.90	17.00
				kW	34306	2978	5	175	245	142	0	477	0	34495		

SR No.	Grid Number	Name of Grid Station	kV	Unit	Domestic	Commercial	Public Lighting	Small Industry	M&L Industries	Tubewell Private	Tubewell Public	Bulk	Traction	Total of Grid Station	Power Factor (%)	Reactive Power (Mvar)
48	59	Haripur	132	kWh	261259	44322	862	4266	83523	2398	0	15223	0	411853	0.91	30.00
				kW	51421	7666	328	606	5189	426	0	4346	0	66482		
49	6700	Haripur-2	132	kWh	91625	8359	64	1897	3387	458	0	82	0	105871	0.90	11.00
				kW	21791	1564	24	269	967	122	0	21	0	23521		
50	6675	Hassan Zai	66	kWh	20297	1346	3	174	1840	41	0	0	0	23701	0.90	6.00
				kW	11585	699	1	74	525	22	0	0	0	11615		
51	638	Hattar	132	kWh	48480	6360	0	2749	523441	228	0	0	0	581259	0.93	36.00
				kW	7906	1037	0	251	92313	26	0	0	0	91380		
52	518	Hattian	132	kWh	0	0	0	0	0	0	0	118605	0	118605	0.92	7.00
				kW	0	0	0	0	0	0	0	17144	0	15430		
53	6671	Havelian132	132	kWh	38251	5442	11	716	2996	177	0	4807	0	52401	0.90	8.00
				kW	13232	2071	4	102	855	47	0	1372	0	15915		
54	834	Hayatabad	132	kWh	284855	18483	1900	947	26986	0	0	320	0	333491	0.90	48.00
				kW	95640	6594	723	135	7701	0	0	90	0	99794		
55	901	Hussai	66	kWh	257896	13339	0	5824	9189	4814	0	0	0	291062	0.90	41.00
				kW	84115	4350	0	827	2622	1282	0	0	0	83878		
56	757	Jalala	132	kWh	256057	35727	0	4344	20351	1735	0	0	0	318215	0.90	50.00
				kW	100794	13595	0	617	5808	462	0	0	0	103084		
57	6706	Jalozai	132	kWh	149031	16737	0	0	0	0	0	0	0	165768	0.90	25.00
				kW	48608	4777	0	0	0	0	0	0	0	51783		
58	70	Jamrud	132	kWh	109079	59949	2702	6633	261881	94	0	0	0	440338	0.92	30.00
				kW	22640	12443	1028	848	42158	25	0	0	0	71228		
59	68	Jehangira	132	kWh	215908	29703	283	7694	64931	23478	0	1529	0	343526	0.91	34.00
				kW	49294	6055	108	1025	18531	6254	0	438	0	73532		

SR No.	Grid Number	Name of Grid Station	kV	Unit	Domestic	Commercial	Public Lighting	Small Industry	M&I Industries	Tubewell Private	Tubewell Public	Bulk	Traction	Total of Grid Station	Power Factor (%)	Reactive Power (Mvar)
60	831	Jutilasht	132	kWh	61702	8298	0	120	26	0	0	54	0	70199	0.90	11.00
				kW	22011	3383	0	17	8	0	0	14	0	22890		
61	6695	Kabal	132	kWh	67744	11724	83	943	3561	116	0	172	0	84343	0.90	8.00
				kW	15467	2348	32	93	1016	15	0	51	0	17119		
62	6673	Kaka Sahib	132	kWh	36047	6205	37	304	2423	1281	0	8165	0	54463	0.90	6.00
				kW	9570	1090	14	39	691	341	0	2332	0	13373		
63	6698	Kala Dakha	132	kWh	28655	5889	30	494	1025	15	0	422	0	36529	0.90	4.00
				kW	5841	1345	11	105	292	3	0	125	0	7337		
64	98	Karak	132	kWh	110073	6628	0	3835	1447	1390	0	0	0	123372	0.90	31.00
				kW	66134	2802	0	876	414	463	0	0	0	63619		
65	906	Katlang	132	kWh	96919	5333	0	1778	1533	915	0	0	0	106477	0.90	14.00
				kW	31611	1107	0	219	438	183	0	0	0	28523		
66	6696	Khan pur	132	kWh	61276	10395	202	1000	19590	563	0	3570	0	96597	0.91	7.00
				kW	12060	1798	77	142	1217	100	0	1018	0	15592		
67	657	Kheshki	132	kWh	0	0	0	0	0	18685	0	0	0	18685	0.90	1.00
				kW	0	0	0	0	0	3555	0	0	0	3022		
68	1172	Kholian Bala Havelia	132	kWh	67366	9579	156	502	2040	2	0	83	0	79728	0.90	10.00
				kW	20784	2430	59	321	583	1	0	21	0	20569		
69	877	Khwaza Khela	66	kWh	237885	16994	3	1557	3934	120	0	0	0	260494	0.90	30.00
				kW	66234	4311	1	221	1123	32	0	0	0	61134		
70	111	Kohat	132	kWh	267806	45277	260	1757	20922	6516	0	13271	0	355809	0.90	56.00
				kW	95536	13602	99	340	5971	1736	0	3786	0	115015		
71	311	Kohat	132	kWh	8173	1492	0	21	0	0	0	0	0	9686	0.90	1.00
				kW	2666	487	0	3	0	0	0	0	0	2998		

SR No.	Grid Number	Name of Grid Station	kV	Unit	Domestic	Commercial	Public Lighting	Small Industry	M&E Industries	Tubewell Private	Tubewell Public	Bulk	Traction	Total of Grid Station	Power Factor (%)	Reactive Power (Mvar)
72	714	Kohat Cement	132	kWh	0	0	0	0	368868	0	0	0	0	368868	0.93	42.00
				kW	0	0	0	0	105271	0	0	0	0	105271		
73	1054	Kotal Town Kohat	132	kWh	113743	15456	94	1059	1606	353	0	39419	0	171731	0.90	24.00
				kW	39347	4901	36	113	459	47	0	11249	0	50536		
74	466	Kulachi	132	kWh	42431	1147	0	1465	0	252	0	0	0	45296	0.90	9.00
				kW	19375	437	0	208	0	67	0	0	0	18078		
75	6701	Kuram Garhi132	132	kWh	33023	1201	0	810	1158	41	0	0	0	36233	0.90	11.00
				kW	25132	1371	0	173	330	11	0	0	0	22965		
76	699	Kurram Garhi P/H	132	kWh	7054	345	0	227	40	102	0	0	0	7768	0.90	2.00
				kW	5368	263	0	58	12	27	0	0	0	4869		
77	460	Lachi	66	kWh	95748	3402	0	972	3118	1548	0	212	0	105000	0.90	18.00
				kW	39036	1942	0	311	890	412	0	60	0	36254		
78	6699	Lakkk-2	132	kWh	24116	1145	0	1261	488	1497	0	0	0	28507	0.90	7.00
				kW	15294	523	0	179	139	399	0	0	0	14881		
79	6681	Lal Qilla	11	kWh	31792	2997	0	111	548	19	0	48	0	35515	0.90	6.00
				kW	12962	1037	0	18	156	5	0	13	0	12062		
80	716	Locomotive	132	kWh	0	0	0	0	3452	0	0	0	0	3452	0.93	0.00
				kW	0	0	0	0	985	0	0	0	0	985		
81	6697	Lora	132	kWh	44565	7560	147	728	14247	409	0	2597	0	70252	0.91	5.00
				kW	8771	1308	56	103	885	73	0	740	0	11338		
82	6686	Lund Khwar	132	kWh	36737	5126	0	623	2920	249	0	0	0	45655	0.90	7.00
				kW	14461	1950	0	89	834	66	0	0	0	14790		
83	896	Madyan	132	kWh	53848	3237	0	79	29533	3	0	0	0	86701	0.91	9.00
				kW	17075	972	0	17	5634	1	0	0	0	20145		

PESCO

SR No.	Grid Number	Name of Grid Station	kV	Unit	Domestic	Commercial	Public Lighting	Small Industry	M&L Industries	Tubewell Private	Tubewell Public	Bulk	Traction	Total of Grid Station	Power Factor (%)	Reactive Power (Mvar)
84	6687	Manga Dargai	132	kWh	21600	4047	23	211	1229	124	0	19	0	27252	0.90	6.00
				kW	10274	2200	9	44	351	33	0	5	0	12268		
85	128	Mansehra	132	kWh	373658	76796	392	6439	13360	193	0	5504	0	476342	0.90	46.00
				kW	76170	17533	149	1372	3812	39	0	1570	0	95613		
86	129	Mardan-1	132	kWh	263171	53953	2610	4050	27955	1853	0	907	0	354499	0.90	37.00
				kW	60085	10097	993	518	7978	296	0	256	0	76212		
87	693	Mardan-2	132	kWh	176557	30153	1170	4081	2964	649	0	7167	0	222742	0.90	28.00
				kW	49158	8605	445	652	846	115	0	2047	0	58775		
88	1173	Mardan-3	132	kWh	38110	5763	280	319	0	17	0	0	0	44489	0.90	11.00
				kW	19775	3289	107	45	0	4	0	0	0	22060		
89	6689	Mardan-4	220	kWh	65739	11227	436	1520	1104	242	0	2668	0	82936	0.90	11.00
				kW	18304	3204	166	243	315	43	0	762	0	21885		
90	324	Mattani	132	kWh	67001	2056	36	175	0	2621	0	6	0	71896	0.90	46.00
				kW	109265	671	14	75	0	698	0	2	0	94116		
91	6680	Munda-Jandol	132	kWh	31792	2997	0	111	548	19	0	48	0	35515	0.90	6.00
				kW	12962	1037	0	18	156	5	0	13	0	12062		
92	137	Muree	132	kWh	32246	1683	0	38	225	0	0	0	0	34192	0.90	4.00
				kW	8180	534	0	5	64	0	0	0	0	7466		
93	473	Muzafar Abad	132	kWh	0	0	0	0	0	0	0	553234	0	553234	0.92	29.00
				kW	0	0	0	0	0	0	0	72461	0	68838		
94	6683	Naguman	132	kWh	59791	12467	76	510	4136	43	0	0	0	77024	0.90	13.00
				kW	23225	3638	29	142	1180	18	0	0	0	26337		
95	857	Nathia Gali	132	kWh	27269	5278	72	85	331	0	0	3200	0	36235	0.90	4.00
				kW	7782	1435	27	11	95	0	0	914	0	8724		

SR No.	Grid Number	Name of Grid Station	KV	Unit	Domestic	Commercial	Public Lighting	Small Industry	M&L Industries	Tubewell Private	Tubewell Public	Bulk	Traction	Total of Grid Station	Power Factor (%)	Reactive Power (Mvar)
96	6688	Nawan Killi	132	kWh	53734	6079	53	1047	1053	785	0	0	0	62751	0.90	9.00
				kW	16579	1652	20	149	301	209	0	0	0	17964		
97	462	Nishat Tarbela	132	kWh	72887	9277	417	731	1419	1110	0	18586	0	104426	0.90	9.00
				kW	13867	1858	159	82	370	197	0	4572	0	18994		
98	145	Nizampur	132	kWh	32512	1097	0	72	656	1476	0	0	0	35813	0.90	6.00
				kW	14846	330	0	10	187	393	0	0	0	13401		
99	709	Nousery	132	kWh	0	34	0	0	0	0	0	67850	0	67884	0.90	8.00
				kW	0	7	0	0	0	0	0	19363	0	17433		
100	150	Nowshera City	132	kWh	263476	34299	353	2466	51015	7071	0	67137	0	425817	0.91	48.00
				kW	66838	7677	134	350	14559	1883	0	19159	0	105071		
101	151	Nowshera Industrial	132	kWh	146442	25210	150	1235	9844	5203	0	33171	0	221255	0.90	26.00
				kW	38877	4427	57	158	2809	1386	0	9467	0	54323		
102	919	Oghi	132	kWh	79765	6015	0	297	378	0	0	608	0	87063	0.90	12.00
				kW	23348	1373	0	42	108	0	0	171	0	23789		
103	340	Pabbi	132	kWh	153133	18857	0	2395	5009	1790	0	8387	0	189571	0.90	30.00
				kW	58270	6727	0	340	1430	477	0	2398	0	62678		
104	6708	Paradise City Nowshe	132	kWh	41865	4702	0	0	0	0	0	0	0	46567	0.90	7.00
				kW	13655	1789	0	0	0	0	0	0	0	14980		
105	6668	Pattan132	132	kWh	8535	548	0	0	0	0	0	0	0	9083	0.90	2.00
				kW	3480	313	0	0	0	0	0	0	0	3413		
106	346	Peshawar Cantt	132	kWh	188906	95974	2471	1804	409	222	0	72208	0	361995	0.90	39.00
				kW	41470	21482	940	303	116	59	0	20606	0	80730		
107	344	Peshawar City	33	kWh	340562	87845	1355	2445	12943	78	0	2610	0	447838	0.90	56.00
				kW	92564	23321	515	306	3694	14	0	746	0	115102		

PESCO

SR No.	Grid Number	Name of Grid Station	kV	Unit	Domestic	Commercial	Public Lighting	Small Industry	M&L Industries	Tubewell Private	Tubewell Public	Bulk	Traction	Total of Grid Station	Power Factor (%)	Reactive Power (Mvar)
108	347	Peshawar Fort	132	kWh	211962	123385	2306	4918	1370	84	0	53310	0	397335	0.90	43.00
				kW	48393	27087	878	749	391	15	0	15215	0	88092		
109	162	Peshawar Industrial	132	kWh	317314	55450	3164	5815	21237	18	0	14685	0	417683	0.90	61.00
				kW	103494	15825	1204	826	6060	5	0	4194	0	125027		
110	514	Peshawar University	132	kWh	374336	85542	1372	628	1148	237	0	66941	0	530205	0.90	70.00
				kW	109570	22193	522	89	328	63	0	19107	0	144280		
111	596	Pezu	132	kWh	41804	2465	0	2309	3032	53	0	0	0	49664	0.90	11.00
				kW	23861	1563	0	738	865	17	0	0	0	22988		
112	156	Prova	132	kWh	41202	2519	0	1459	1914	518	0	0	0	47613	0.90	14.00
				kW	27667	2396	0	207	547	138	0	0	0	29408		
113	211	R.B Tarbela	132	kWh	157759	14651	93	1863	31517	2006	0	19840	0	227729	0.91	22.00
				kW	36018	3279	35	265	8694	401	0	5661	0	48918		
114	940	Rajar	132	kWh	49901	3244	0	279	615	30	0	0	0	54068	0.90	15.00
				kW	31647	1763	0	40	175	8	0	0	0	31951		
115	1149	Rampura	132	kWh	0	0	0	0	0	0	0	130825	0	130825	0.92	12.00
				kW	0	0	0	0	0	0	0	33145	0	28173		
116	6710	Rashakai EZ	132	kWh	0	0	0	0	2188699	0	0	0	0	2188699	0.93	165.00
				kW	0	0	0	0	416419	0	0	0	0	416419		
117	273	Regi lalma	132	kWh	16536	1837	0	0	0	0	0	0	0	18373	0.90	3.00
				kW	5393	699	0	0	0	0	0	0	0	6093		
118	876	Rehman Baba	132	kWh	192643	34698	479	1457	2770	93	0	0	0	232141	0.90	43.00
				kW	78540	14146	182	207	790	21	0	0	0	89193		
119	6669	Sabir Abad	132	kWh	26208	1578	0	913	344	331	0	0	0	29374	0.90	7.00

SR No.	Grid Number	Name of Grid Station	kV	Unit	Domestic	Commercial	Public Lighting	Small Industry	M&I Industries	Tubewell Private	Tubewell Public	Bulk	Traction	Total of Grid Station	Power Factor (%)	Reactive-Power (Mvar)
				kW	15746	667	0	208	98	110	0	0	0	15147		
120	861	Sadi Cement	132	kWh	0	0	0	0	181381	0	0	0	0	181381	0.93	20.00
				kW	0	0	0	0	51765	0	0	0	0	51765		
121	819	Sakhi Chashma	132	kWh	76441	6359	19	5755	15721	53	0	188	0	104536	0.90	29.00
				kW	58174	4839	7	1840	4486	14	0	54	0	59003		
122	6694	Salar Zai	132	kWh	38739	2766	0	539	9167	153	0	0	0	51364	0.91	6.00
				kW	11056	877	0	77	2616	41	0	0	0	12466		
123	903	Sarai Naurang	132	kWh	87183	6172	0	3985	2792	11046	0	0	0	111177	0.90	31.00
				kW	62202	4404	0	849	797	2942	0	0	0	64074		
124	365	Shabqadar	132	kWh	146900	9745	25	1261	13316	294	0	0	0	171540	0.90	41.00
				kW	83847	5056	9	537	3800	156	0	0	0	84066		
125	193	Shahi Bagh	132	kWh	240299	61774	394	2046	14862	69	0	0	0	319444	0.90	46.00
				kW	78375	16790	150	467	4242	12	0	0	0	95035		
126	942	Shahi Bagh	132	kWh	37413	1675	0	230	643	111	0	0	0	40071	0.90	14.00
				kW	32853	1365	0	98	184	74	0	0	0	29388		
127	6691	Shakardara	132	kWh	27752	4692	27	182	2168	675	0	1375	0	36871	0.90	6.00
				kW	9900	1410	10	35	618	180	0	392	0	11918		
128	956	Shangla	220	kWh	49911	1974	0	11	50	0	0	0	0	51946	0.90	9.00
				kW	20349	902	0	2	14	0	0	0	0	18076		
129	671	Sheikh Muhammadi	132	kWh	37606	1464	15	73	72	1101	0	75	0	40406	0.90	21.00
				kW	42929	1672	6	39	21	733	0	19	0	43147		
130	384	Swabi	132	kWh	279419	31609	278	5444	5475	4080	0	0	0	326305	0.90	45.00
				kW	86208	8591	106	773	1563	1087	0	0	0	93412		
131	461	Swat	500	kWh	439770	76109	539	6123	23114	755	0	1117	0	547527	0.90	54.00

Sr No.	Grid Number	Name of Grid Station	kV	Unit	Domestic	Commercial	Public Lighting	Small Industry	M&L Industries	Tubewell Private	Tubewell Public	Bulk	Traction	Total of Grid Station	Power Factor (%)	Reactive Power (Mvar)
				kW	100404	15243	205	602	6597	101	0	319	0	111123		
132	386	Tajazai	132	kWh	18594	876	0	1091	371	2219	0	0	0	23151	0.90	14.00
				kW	30323	1000	0	697	1087	1478	0	0	0	29397		
133	992	Tajazai	132	kWh	71142	3377	0	3719	1440	4417	0	0	0	84094	0.90	21.00
				kW	45118	1542	0	528	411	1176	0	0	0	43898		
134	394	Tall	66	kWh	37865	3546	0	228	323	501	0	10812	0	53274	0.90	25.00
				kW	48028	4048	0	173	359	267	0	4458	0	51599		
135	567	Tangi	132	kWh	111456	10850	93	921	670	2605	0	0	0	126595	0.90	47.00
				kW	97872	12386	35	490	1521	1735	0	0	0	96934		
136	393	Tank	132	kWh	106396	5948	0	3471	687	1193	0	431	0	118125	0.90	32.00
				kW	67476	4244	0	853	196	353	0	126	0	65924		
137	718	Tarbela P/H	132	kWh	17178	2244	534	126	365	0	0	0	0	20446	0.90	2.00
				kW	4263	569	203	18	104	0	0	0	0	4642		
138	786	Tarnawa	132	kWh	0	0	0	0	0	0	0	34201	0	34201	0.92	4.00
				kW	0	0	0	0	0	0	0	9761	0	9761		
139	6666	Taru jabba	11	kWh	120008	23618	261	1322	4273	651	0	3484	0	153616	0.90	22.00
				kW	38536	6882	99	180	1218	172	0	996	0	44440		
140	6670	Thakot132	132	kWh	29994	1365	0	18	611	0	0	0	0	31989	0.90	5.00
				kW	12229	708	0	3	175	0	0	0	0	11147		
141	389	Timergara	132	kWh	56727	1934	0	418	534	7	0	0	0	59619	0.90	8.00
				kW	17502	690	0	59	152	2	0	0	0	16564		
142	736	Timergara	33	kWh	207841	19592	2	723	3582	127	0	312	0	232180	0.90	38.00
				kW	84736	6777	1	116	1022	34	0	87	0	78857		
143	1181	WAPDA House Colony	132	kWh	8848	957	45	60	0	0	0	7	0	9916	0.90	7.00

PESCO

SR No.	Grid Number	Name of Grid Station	kV	Unit	Domestic	Commercial	Public Lighting	Small Industry	M&L Industries	Tubewell Private	Tubewell Public	Bulk	Traction	Total of Grid Station	Power Factor (%)	Reactive-Power (Mvar)
				kW	14429	1365	17	19	0	0	0	2	0	13458		
144	146	Wah	66	kWh	14605	2022	0	285	1653	367	0	0	0	18932	0.90	2.00
				kW	3547	513	0	41	472	98	0	0	0	3970		
145	6705	Wari132	132	kWh	75830	2591	0	131	756	57	0	0	0	79364	0.90	11.00
				kW	27051	591	0	17	215	9	0	0	0	23701		
146	910	Warsak	132	kWh	52863	624	48	312	328	98	0	17793	0	72066	0.90	31.00
				kW	67051	648	18	143	93	56	0	7257	0	63977		
147	6674	Warsak Road	132	kWh	38284	14418	377	329	124	52	0	14170	0	67754	0.90	12.00
				kW	19042	3325	144	73	36	20	0	4042	0	23945		
148	1178	ZRK	66	kWh	0	0	0	0	61376	0	0	0	0	61376	0.93	7.00
				kW	0	0	0	0	17517	0	0	0	0	17517		
149	6667	besham132	132	kWh	12649	1833	0	0	65	0	0	0	0	14548	0.90	2.00
				kW	4813	1047	0	0	18	0	0	0	0	4997		

Figure 1-10: Distribution Network Map (PESCO)

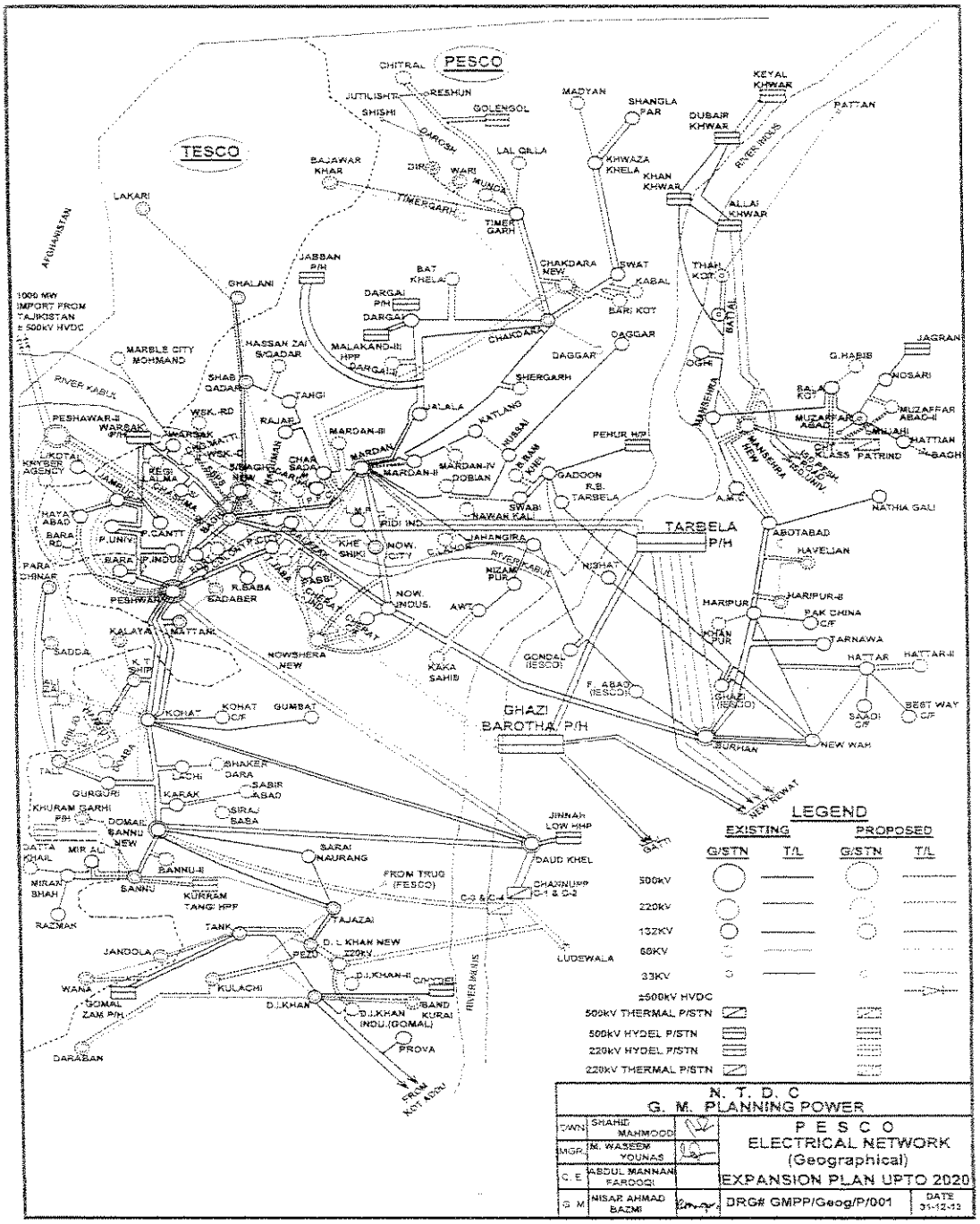

Disclaimer

CPPA-G centrally consolidated the data from all DISCOs. The data for this report has been provided by PESCO. So, the responsibility of accuracy of data is on PESCO. It is also important to mention here that CPPA-G only facilitated in the preparation of this forecast as it is the prime responsibility of the DISCOs to prepare their own forecast and the DISCO prepared the same.

Further, a transition plan has been prepared by CPPA-G to help build the overall capacity of the DISCOs in-terms of people, processes and technology so that DISCOs start doing this forecast without any assistance.

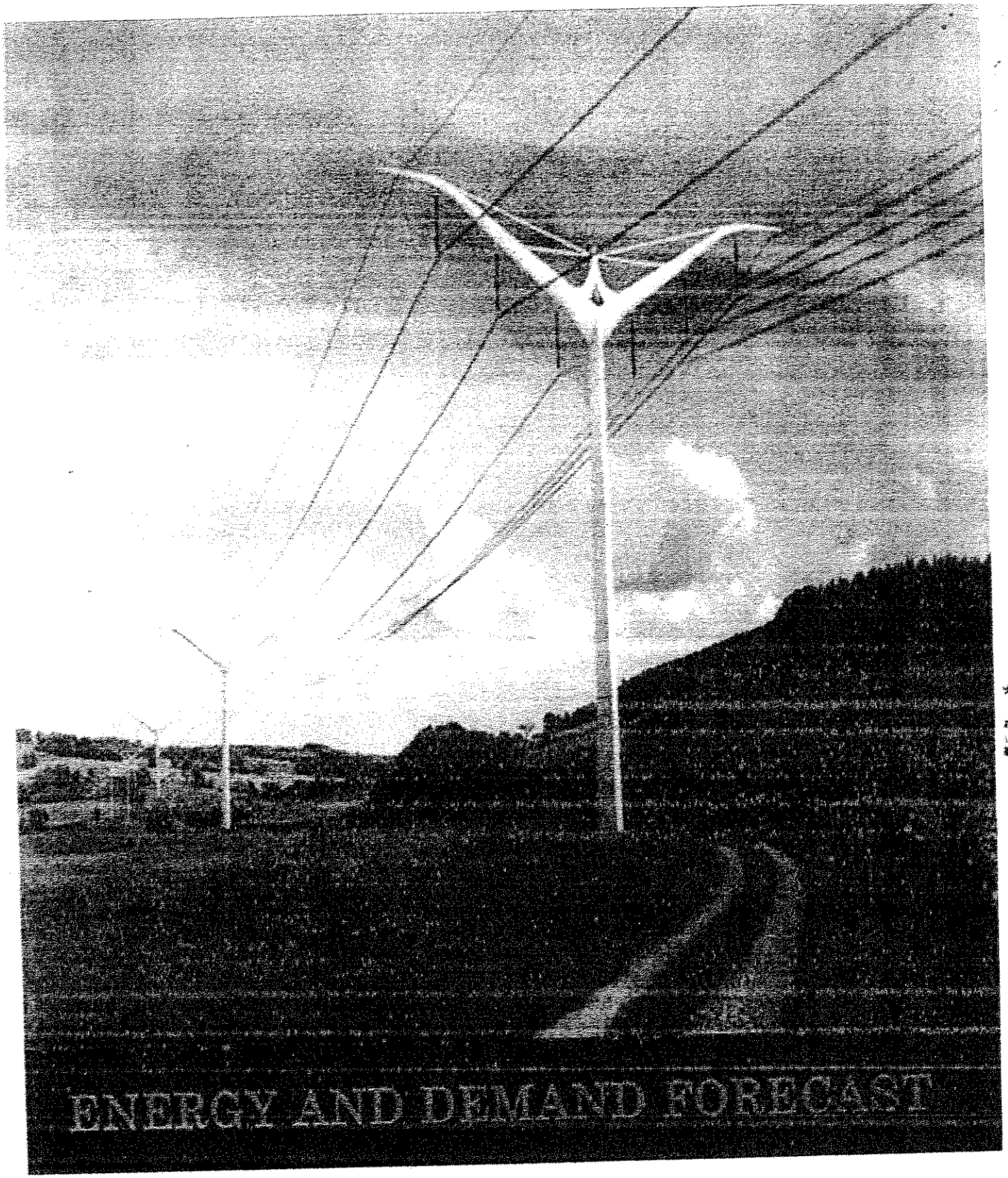

ENERGY AND DEMAND FORECAST

ANNEX-3

List of Upcoming Generation Additions as of July, 2019

Sr. #	Name of Project	Agency	Fuel	Installed Capacity (MW)	Comissioning Date
	2018-19				
1	HUB Power Company Ltd. (Unit-II)	PPIB	Imp. Coal	660	Aug. 2019
2	Shahtaj Sugar Mills Ltd.	AEDB	Baggase	32	Aug. 2019
3	Hamza Power (Pvt.) Ltd.	AEDB	Baggase	49.8	Aug. 2019
4	Etihad Power Generation Limited.	AEDB	Baggase	74.4	Aug. 2019
5	Indus Energy Limited.	AEDB	Baggase	31	Aug. 2019
6	Bahawalpur Energy Ltd.	AEDB	Baggase	31.2	Aug. 2019
7	Kashmir Power Private Ltd	AEDB	Baggase	40	Aug. 2019
8	Ittefaq Power (Pvt.) Ltd.	AEDB	Baggase	31.2	Aug. 2019
9	RLNG based power plant at Trimun, Jhang (GT NO.1 & 2)	PPIB	Imp. LNG	800	Aug. 2019
10	Kohi HPP	PEDO	Hydro	41	Aug. 2019
	Generation Addition in 2018-19			**1790**	
	2019-20				
11	Zorlu Enerji Elektrik Uretim A.S	PPDB	Solar	100	Jul. 2019
12	HUB Power Company Ltd. (Unit-II)	PPIB	Imp. Coal	660	Aug. 2019
13	Hamza Sugar Mills Ltd.	AEDB	Baggase	30	Sep. 2019
14	RYK Energy Limited.	AEDB	Baggase	25	Sep. 2019
15	HSM Energy Ltd.	AEDB	Baggase	27	Sep. 2019
16	TAY Power Gen Limited	AEDB	Baggase	30	Sep. 2019
17	Two Star Industries Pvt Ltd.	AEDB	Baggase	48.9	Sep. 2019
18	Faran Power Ltd	AEDB	Baggase	26.5	Sep. 2019
19	Mirpurkhas Energy Ltd.	AEDB	Baggase	26	Sep. 2019
20	Allawas Sugar Mills Ltd.	AEDB	Baggase	30	Sep. 2019
21	Sheikhoo Power Ltd.	AEDB	Baggase	30	Sep. 2019
22	Mehran Energy Ltd.	AEDB	Baggase	26.5	Sep. 2019
23	Sadiqabad Power Pvt Ltd	AEDB	Baggase	45	Sep. 2019
24	Gotki Power Pvt Ltd.	AEDB	Baggase	45	Sep. 2019
25	Gulpur Poonch river	PPIB	Hydro	102	Oct. 2019
26	RLNG based power plant at Trimun, Jhang (ST NO.1)	PPIB	Imp. LNG	463	Apr. 2020
	Generation Addition in 2019-20			**1714**	
	2020-21				
27	Koshan Matiltan HPP	PEDO	Hydro	84	Nov. 2020
28	K-2	PAEC	Nuclear	1,100	Nov. 2020
29	Thar Energy Limited (HUBCO Ltd.)Thar Block-II	PPIB	Dom. Coal	330	Mar. 2021
30	Thal NOVA , Thar Block-II	PPIB	Dom. Coal	330	Mar. 2021
31	Lucky Electric Power Company Ltd	PPIB	Dom. Coal	660	Mar. 2021
32	Keyal Khwar	WAPDA	Hydro	128	Jun. 2021
33	Luat HPP	AJK	Hydro	49	Jun. 2021
	Generation Addition in 2020-21			**2681**	

Sr. #	Name of Project	Agency	Fuel	Installed Capacity (MW)	Commissioning Date
	2021-22				
34	K-2	PAEC	Nuclear	1,100	Sep. 2021
35	Lawi HPP	PEDO	Hydro	69	Nov. 2021
36	Karot HPP	PPIB	Hydro	720	Dec. 2021
37	TPS Jamshoro (Phase-I)	GENCOs	Imp. Coal	660	Dec. 2021
38	Siddiqsons Limited	PPIB	Dom. Coal	330	Mar. 2022
39	TPS Jamshoro (Phase-II)	GENCOs	Imp. Coal	660	Jun. 2022
40	CASA	GoP	Import	1,000	Jun. 2022
41	Dasu HPP	WAPDA	Hydro	2,160	Jun. 2022
42	Jagran-III	AJK	Hydro	35	Jun. 2022
	Generation Addition in 2021-22			**6734**	
	2022-23				
43	Shanghai Electric Power Project (Unit-I)	PPIB	Dom. Coal	660	Aug. 2022
44	Coal Based Power Plant at Gawadar	PPIB	Imp. Coal	300	Dec. 2022
45	Harighel-Majeedgala HPP	AJK	Hydro	40.22	Dec. 2022
46	Suki Kinari HPP	PPIB	Hydro	870	Dec. 2022
47	Shanghai Electric Power Project (Unit-II)	PPIB	Dom. Coal	660	Feb. 2023
48	Chinot Dam	WAPDA	Hydro	80	Jun. 2023
49	Oracle Coal Power Project	PPIB	Dom. Coal	1,320	Jun. 2023
50	Gulmit Nar HPP	AJK	Hydro	49.5	Jun. 2023
	Generation Addition in 2022-23			**3980**	
	2023-24				
51	Mohmand Dam	WAPDA	Hydro	800	May. 2024
52	Ashkot HPP	AJK	Hydro	300	Jun. 2024
53	Tarbela 5th Ext. Project	WAPDA	Hydro	1,410	Jun. 2024
54	Lower Spat Gah	WAPDA	Hydro	496	Jun. 2024
55	Phander	WAPDA	Hydro	80	Jun. 2024
56	Harpo	WAPDA	Hydro	35	Jun. 2024
57	Lower Palas Valley	WAPDA	Hydro	665	Jun. 2024
	Generation Addition in 2023-24			**3786**	
	2024-25				
58	Azad Pattan HPP	PPIB	Hydro	701	Jun. 2025
59	Basho	WAPDA	Hydro	40	Jun. 2025
60	C-5	PAEC	Nuclear	1100	Jun. 2025
	Generation Addition in 2024-25			**1841**	
	Total Generation Addition by 2024-25			**22526**	

Note: Commissioning schedules of new power generation projects are based on information provided by PPIB, WAPDA, Hydel, PAEC, PPDB, AEDB, PEDO and DISCOs.

ANNEX-4

PESCO LOAD FLOW STUDY FOR (DIIP) FIVE YEAR PLAN
YEAR 2018: BASE CASE

Exhibit-1-2018-1.1

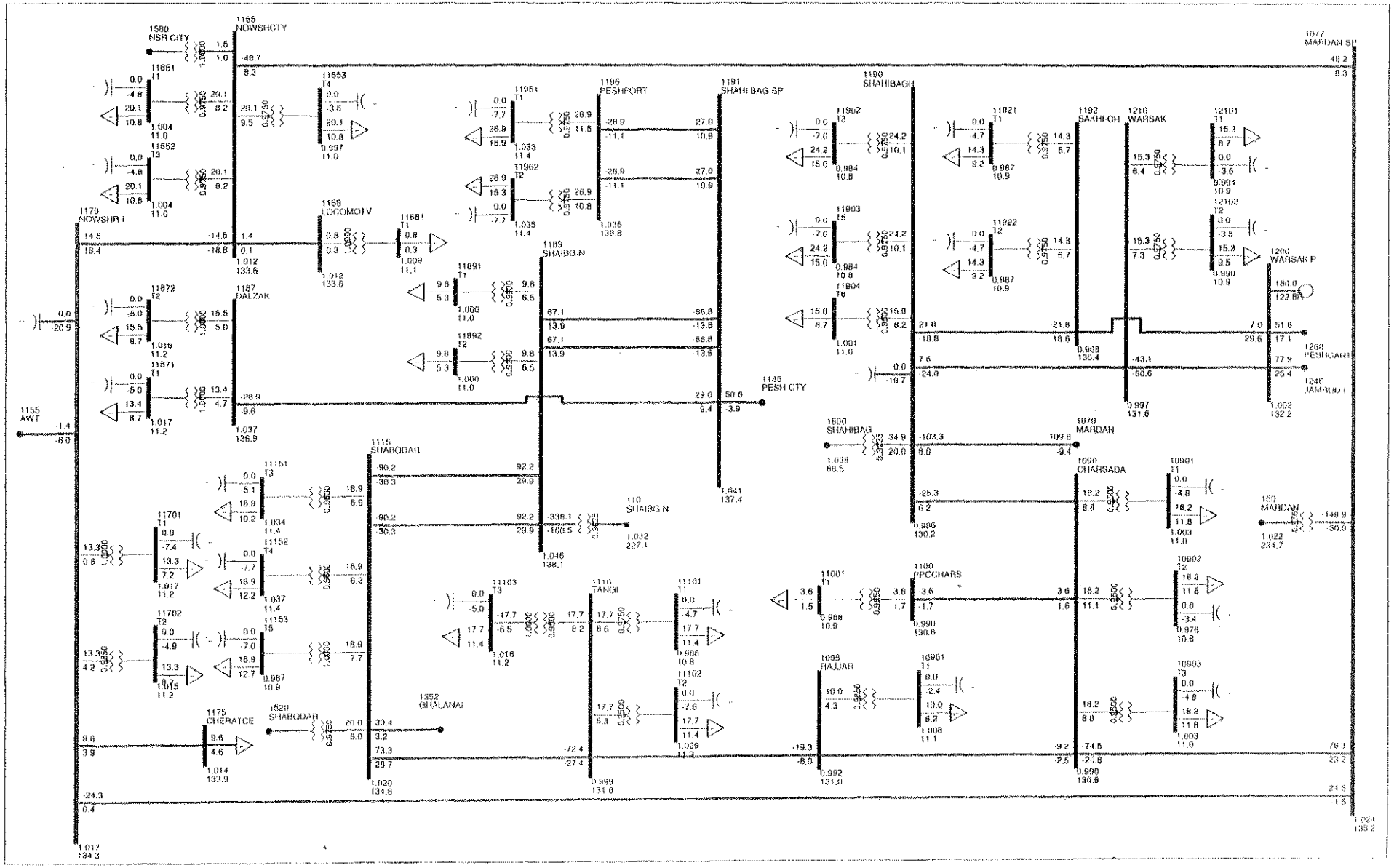

PESCO LOAD FLOW STUDY FOR (DIIP) FIVE YEAR PLAN
YEAR 2018: BASE CASE

Exhibit-1-2018-1.2

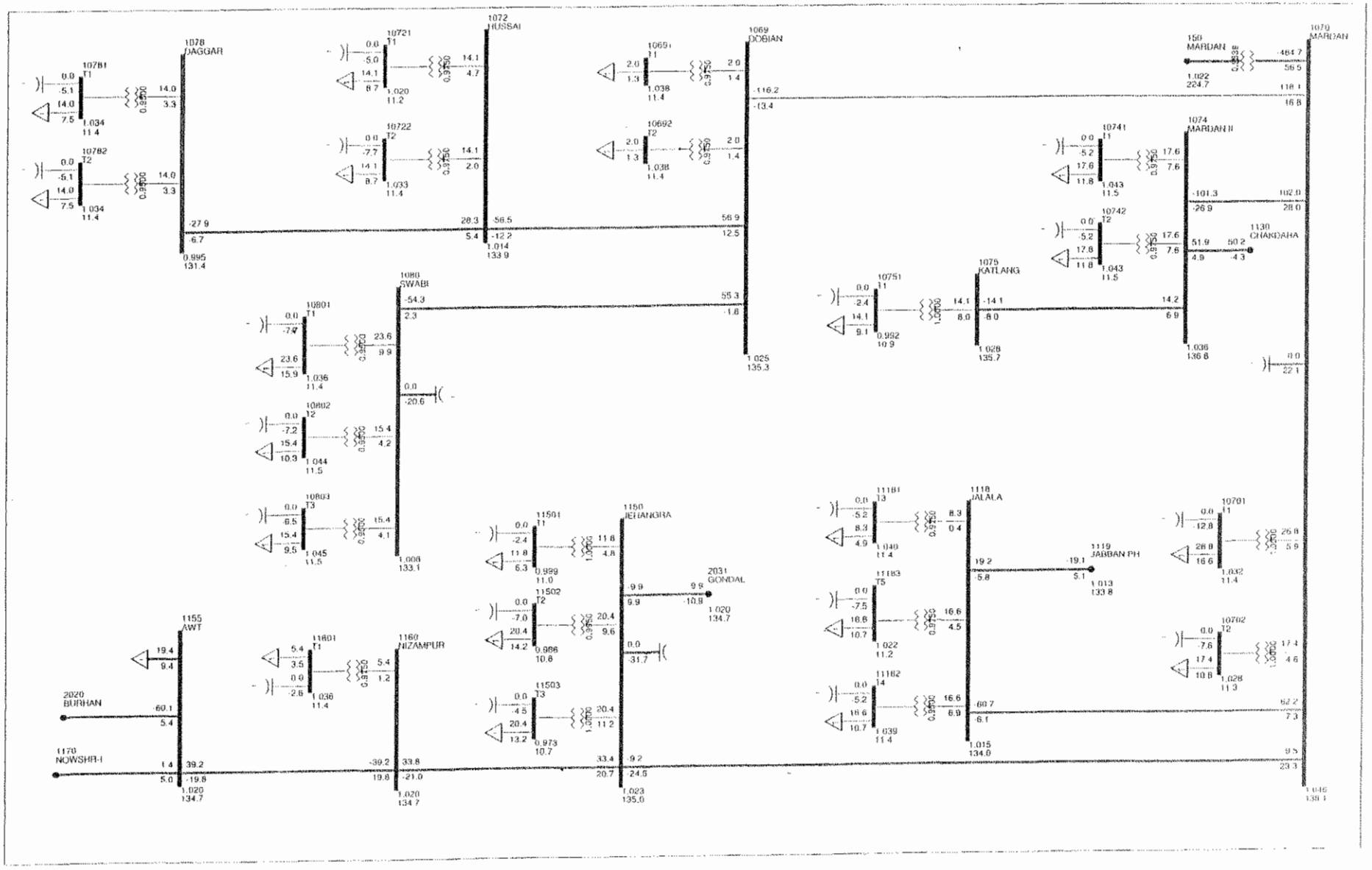

PESCO LOAD FLOW STUDY FOR (DIIP) FIVE YEAR PLAN
YEAR 2018: BASE CASE

Exhibit-1-2018-1.3

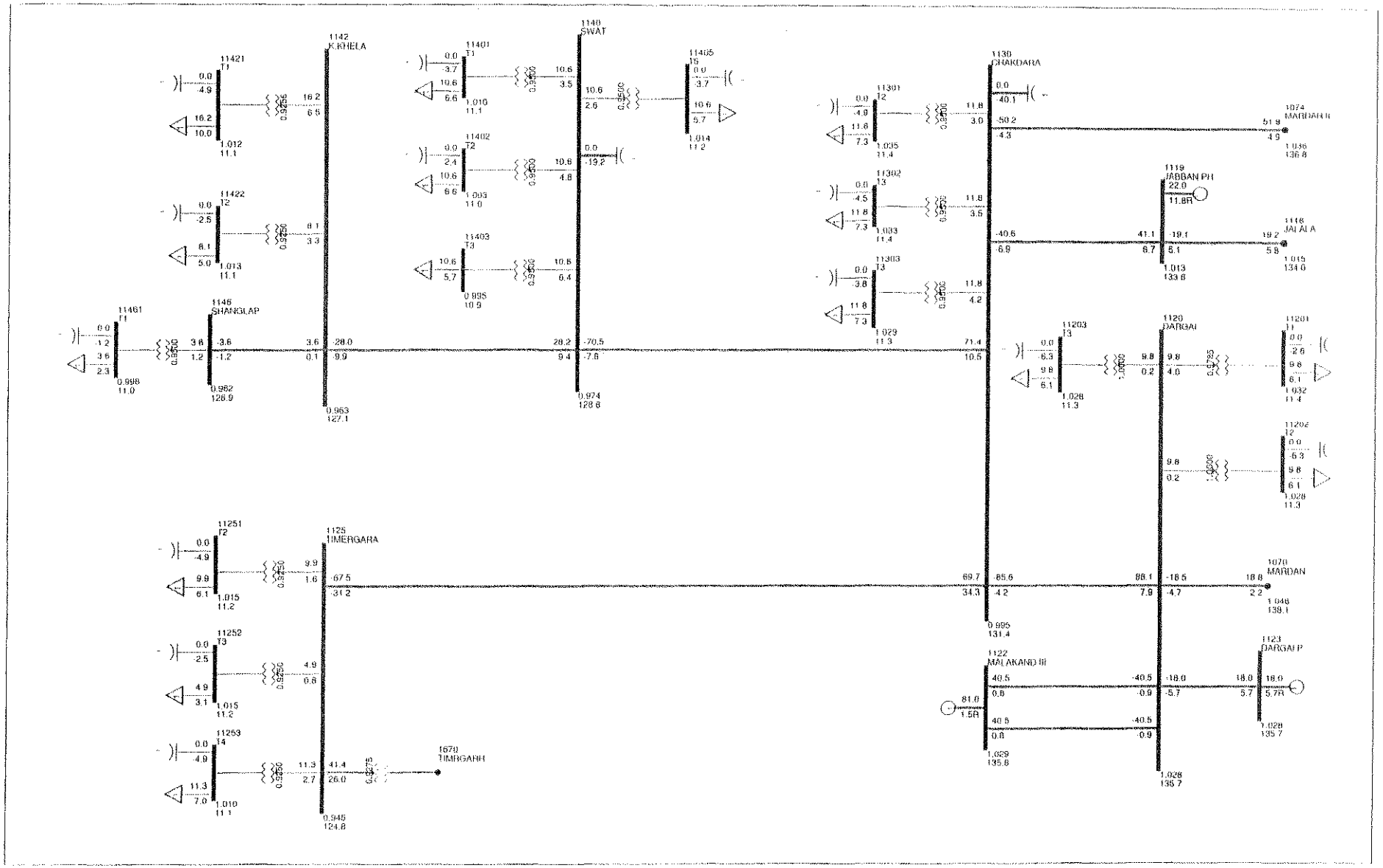

PESCO LOAD FLOW STUDY FOR (DIIP) FIVE YEAR PLAN
YEAR 2018: BASE CASE

Exhibit-1-2018-1.4

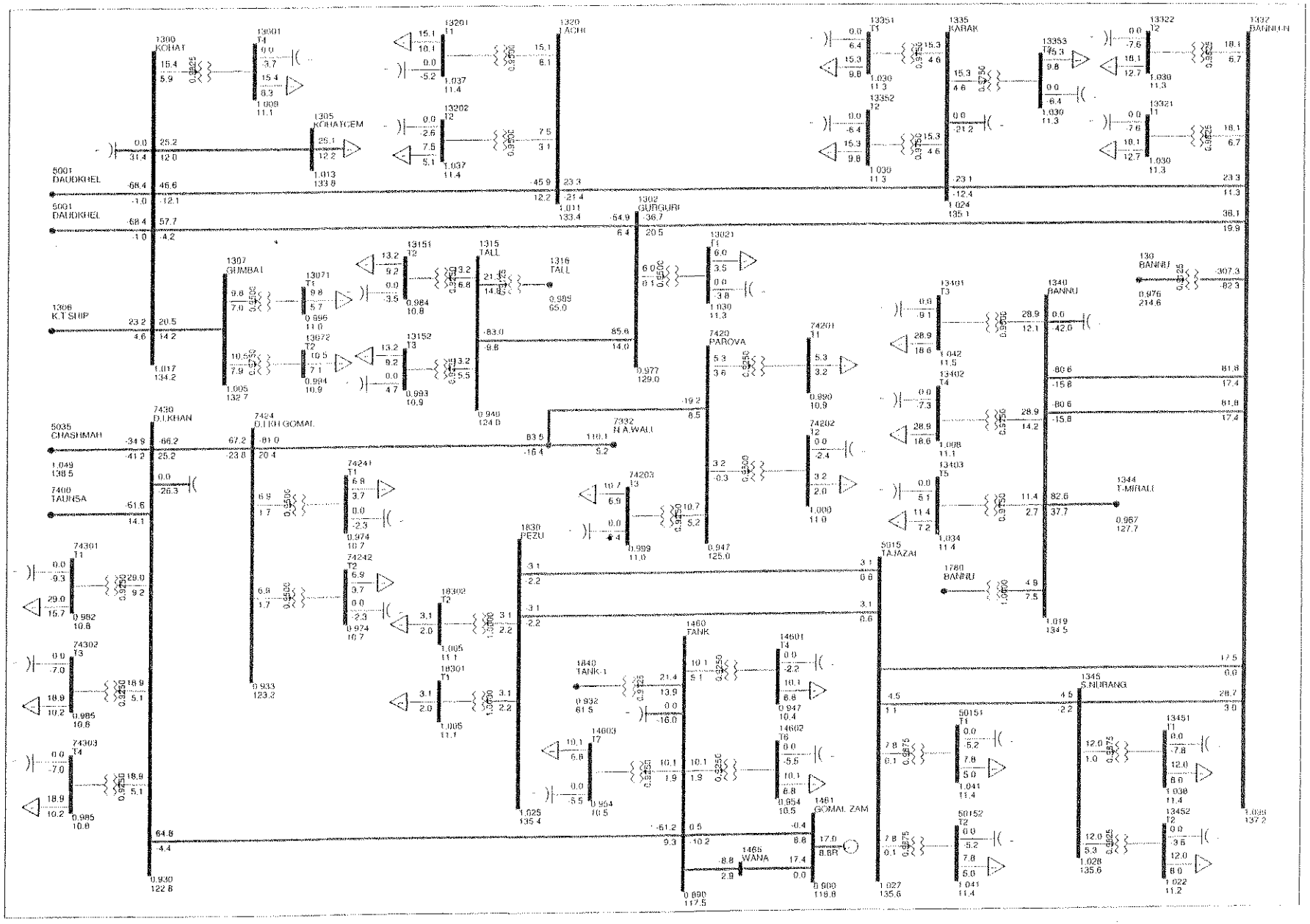

PESCO LOAD FLOW STUDY FOR (DIIP) FIVE YEAR PLAN
YEAR 2018: BASE CASE

Exhibit-1-2018-1.5

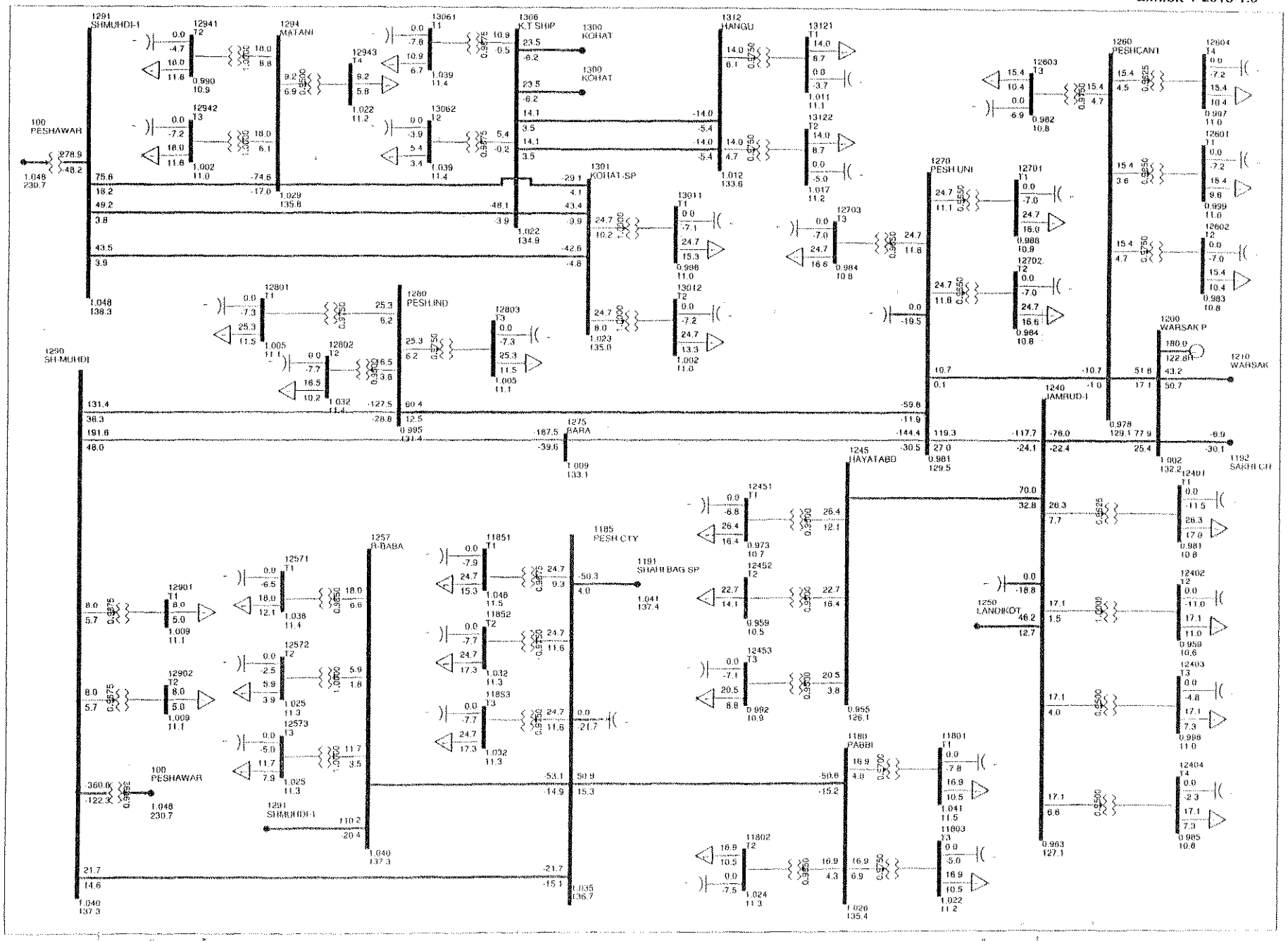

PESCO LOAD FLOW STUDY FOR (DIIP) FIVE YEAR PLAN
YEAR 2018: BASE CASE

Exhibit-1-2018-1.6

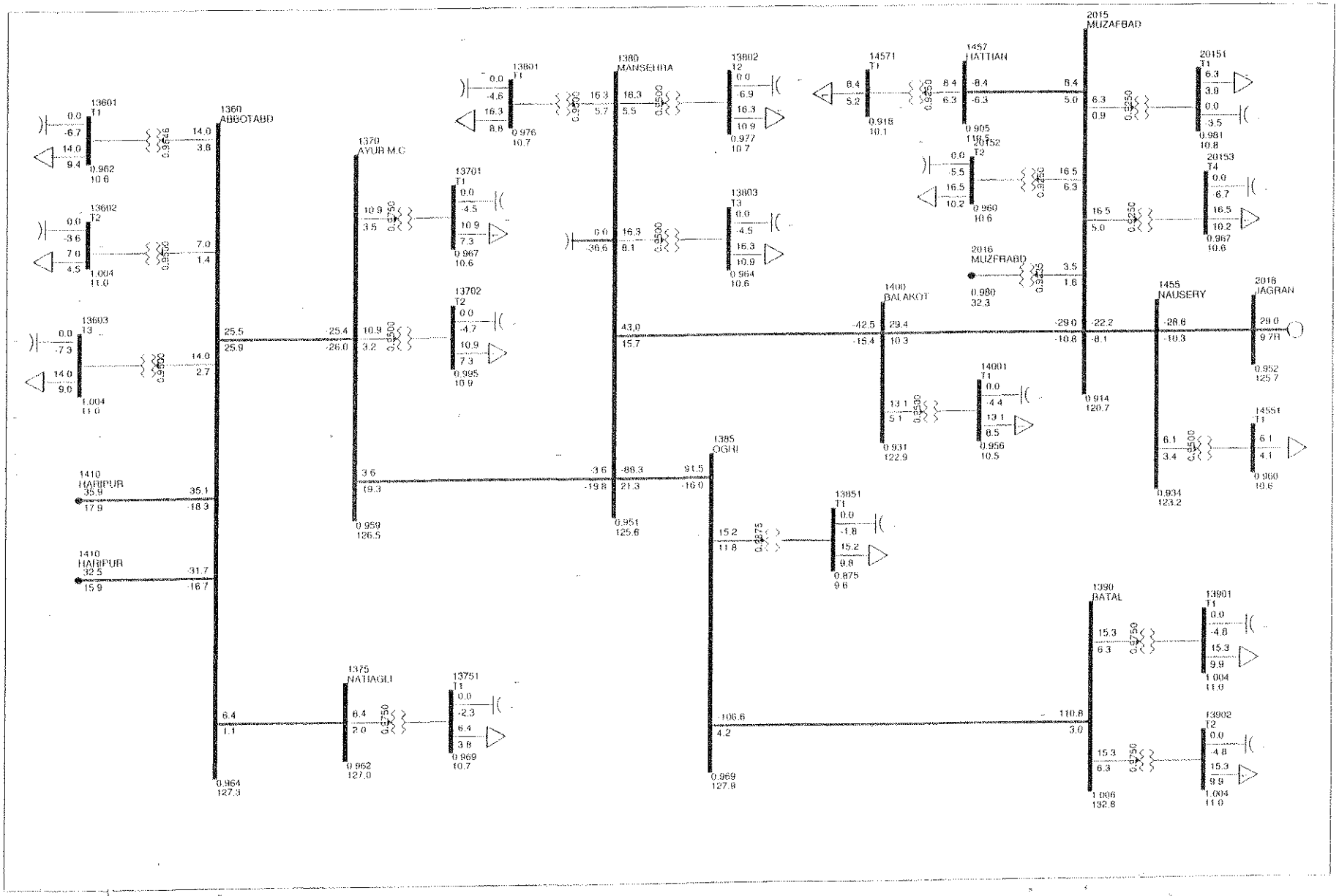

PESCO LOAD FLOW STUDY FOR (DIIP) FIVE YEAR PLAN
YEAR 2018: BASE CASE

Exhibit-1-2018-1.7

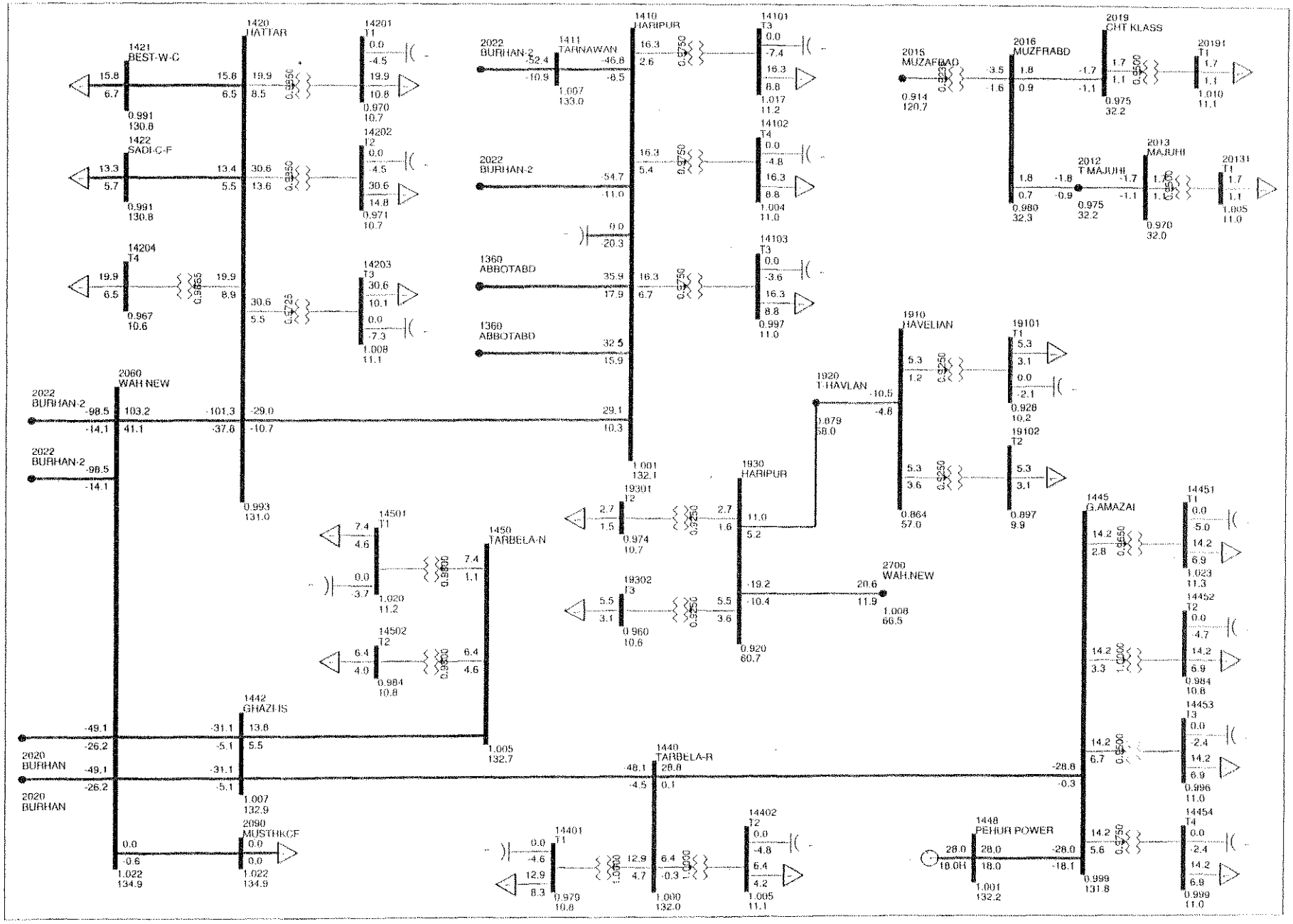

PESCO LOAD FLOW STUDY FOR (DIIP) FIVE YEAR PLAN
YEAR 2018: BASE CASE

Exhibit-1-2018-1.8

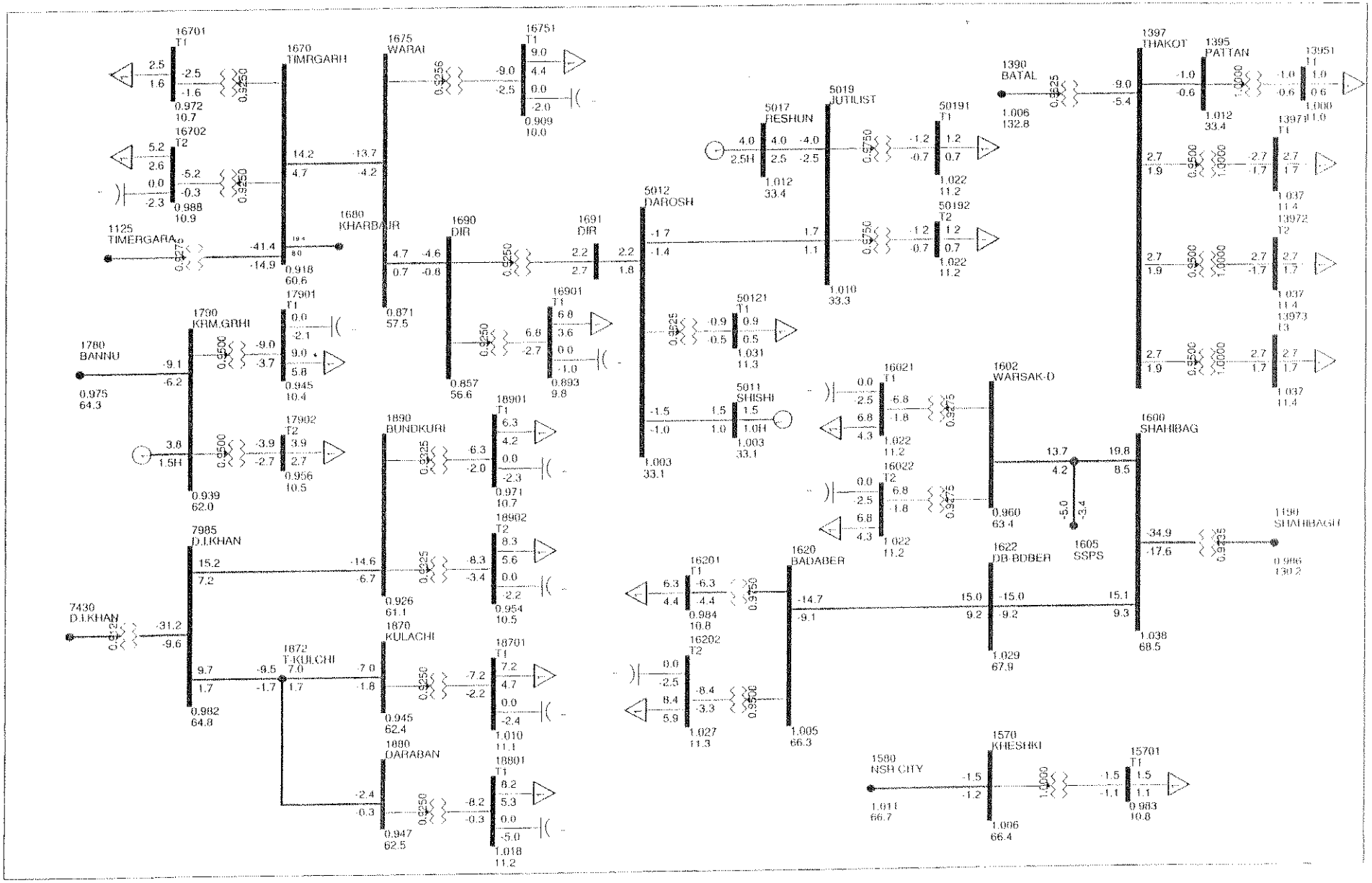

PESCO LOAD FLOW STUDY FOR (DIIP) FIVE YEAR PLAN
YEAR 2018: BASE CASE WITH REINFORCEMENT

Exhibit-1-2018-2.1

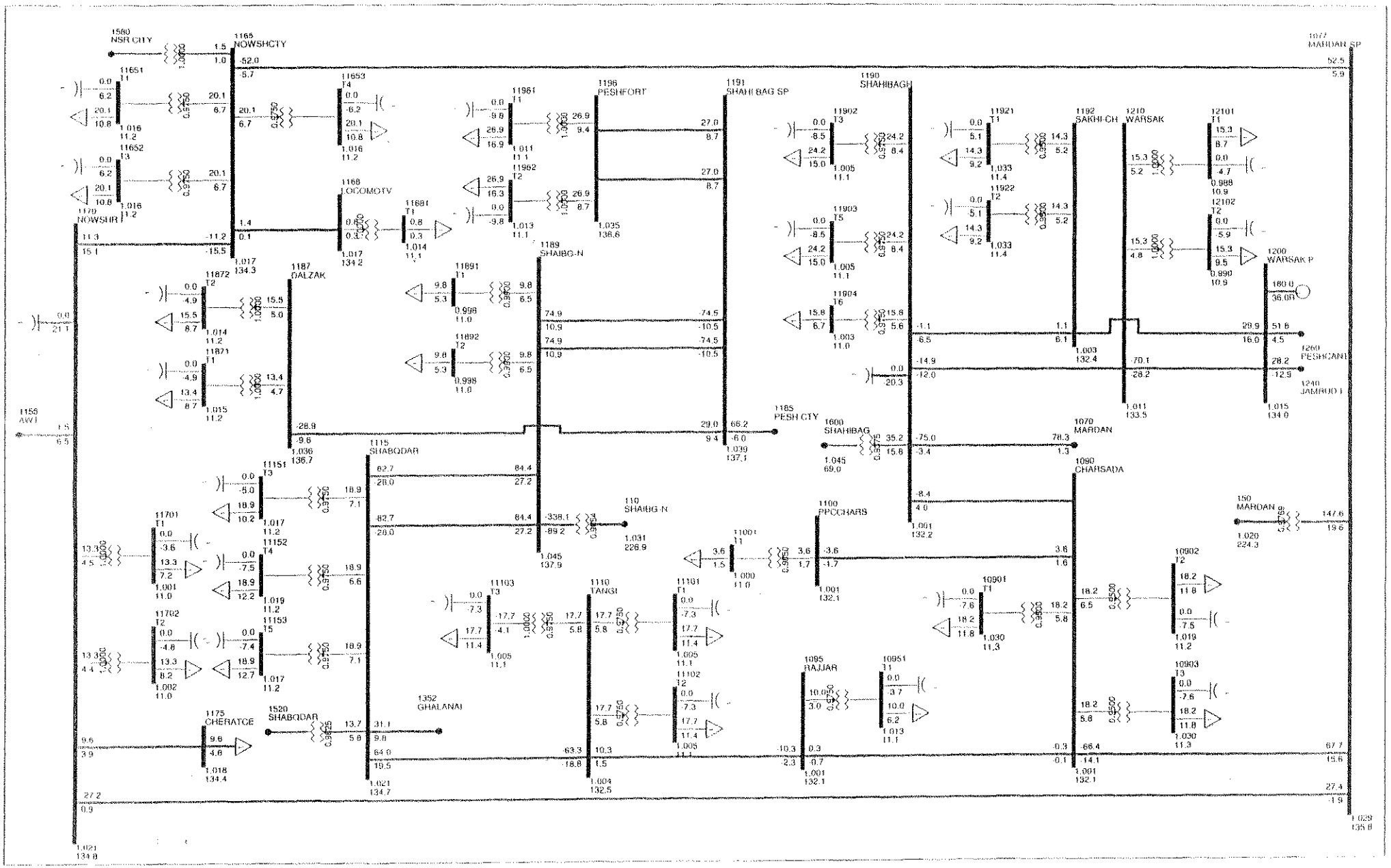

PESCO LOAD FLOW STUDY FOR (DIIP) FIVE YEAR PLAN
YEAR 2018: BASE CASE WITH REINFORCEMENT

Exhibit-1-2018-2.2

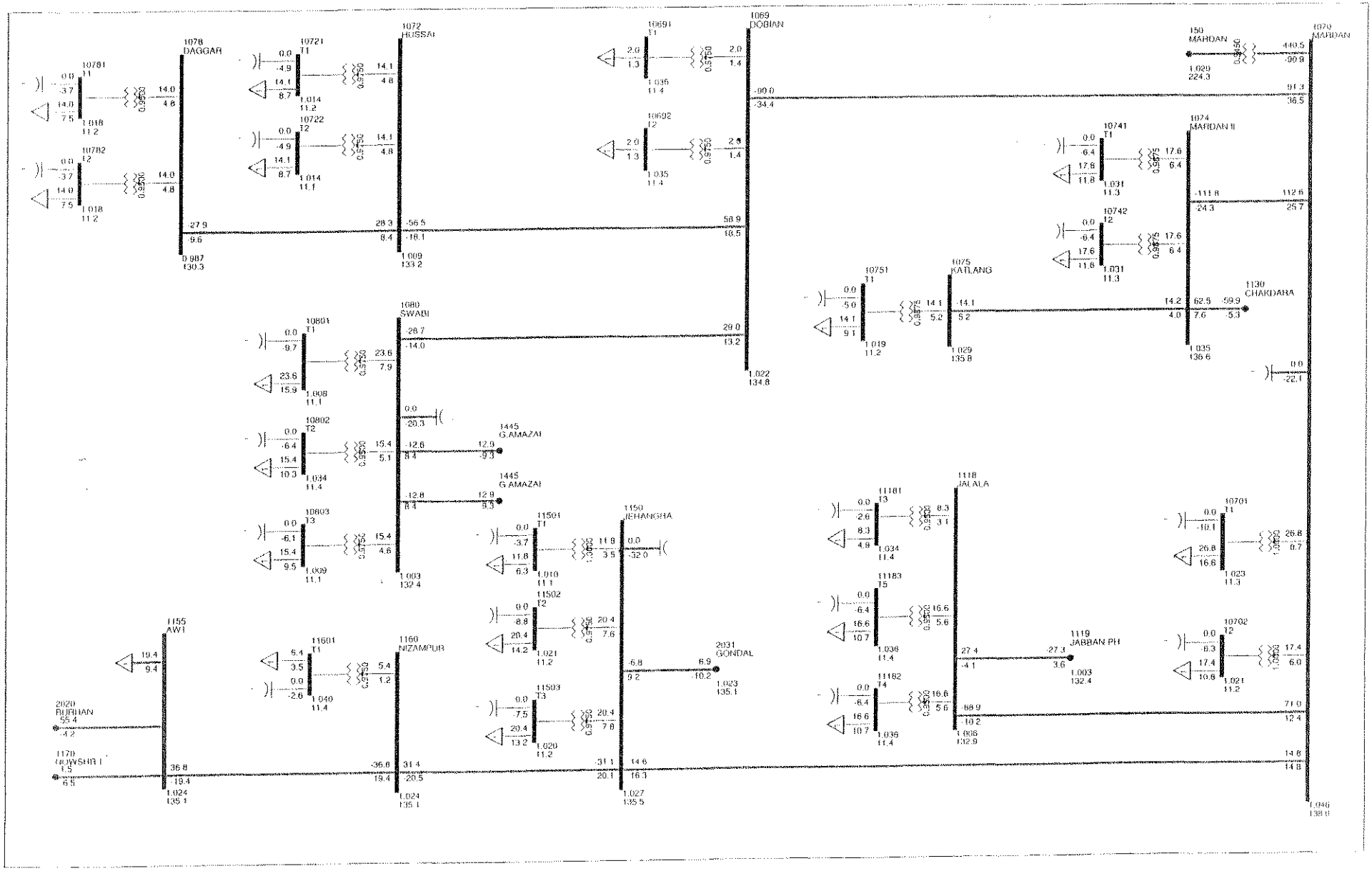

PESCO LOAD FLOW STUDY FOR (DIIP) FIVE YEAR PLAN
YEAR 2018: BASE CASE WITH REINFORCEMENT

Exhibit-1-2018-2.3

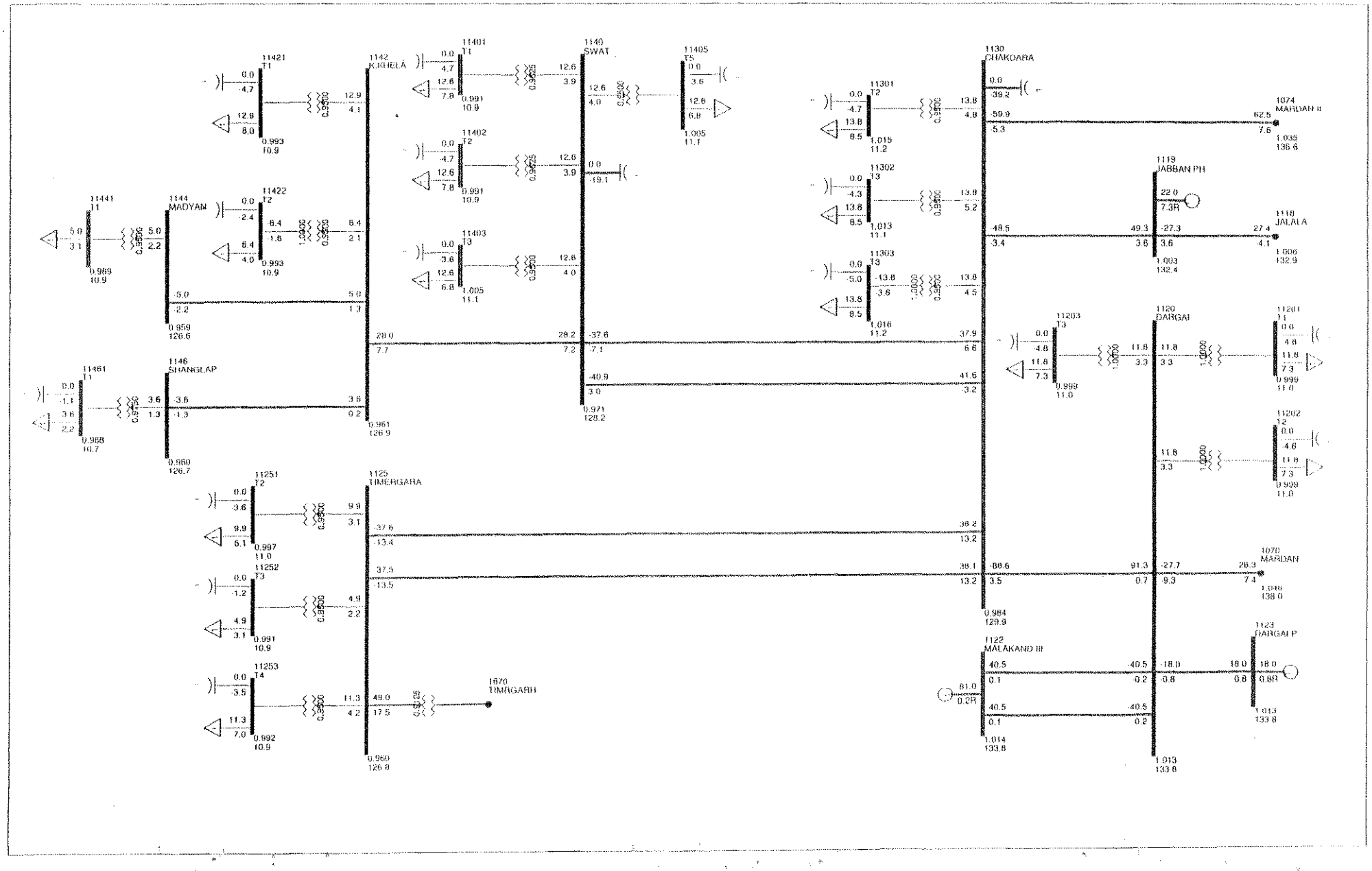

PESCO LOAD FLOW STUDY FOR (DIIP) FIVE YEAR PLAN
YEAR 2018: BASE CASE WITH REINFORCEMENT

Exhibit-1-2018-2.4

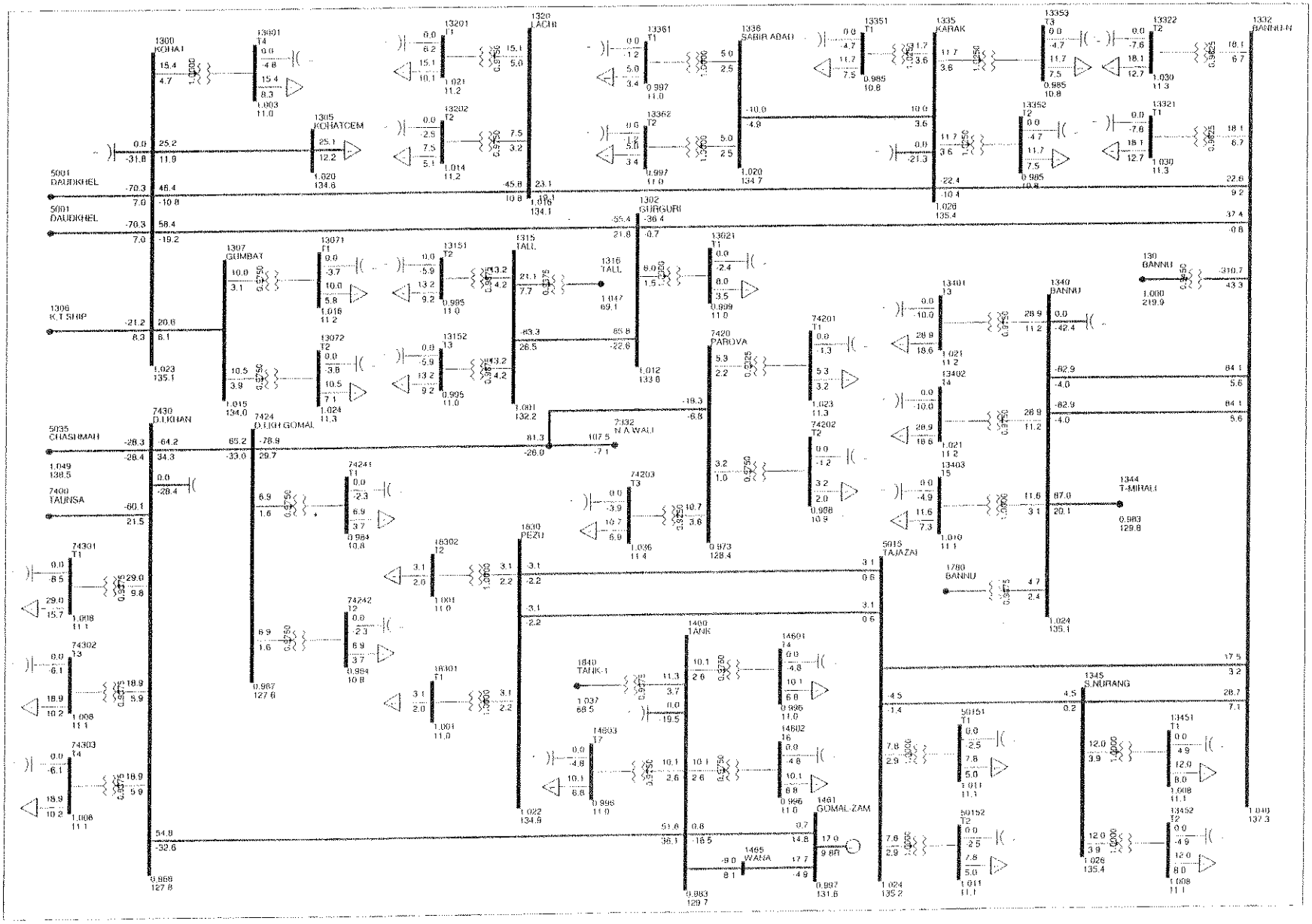

PESCO LOAD FLOW STUDY FOR (DIIP) FIVE YEAR PLAN
YEAR 2018: BASE CASE WITH REINFORCEMENT

Exhibit-1-2018-2.5

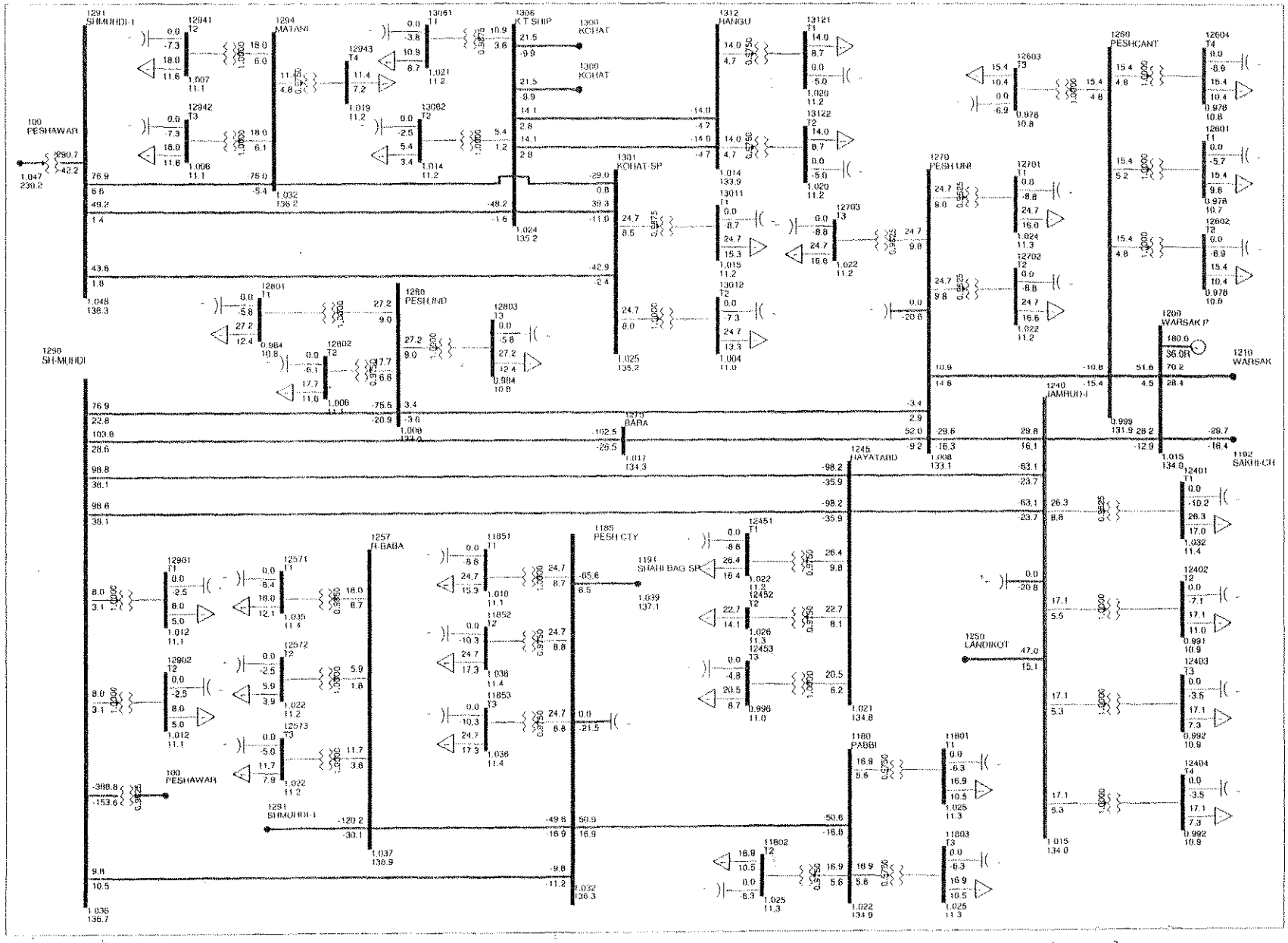

PESCO LOAD FLOW STUDY FOR (DIIP) FIVE YEAR PLAN
YEAR 2018: BASE CASE WITH REINFORCEMENT

Exhibit-1-2018-2.6

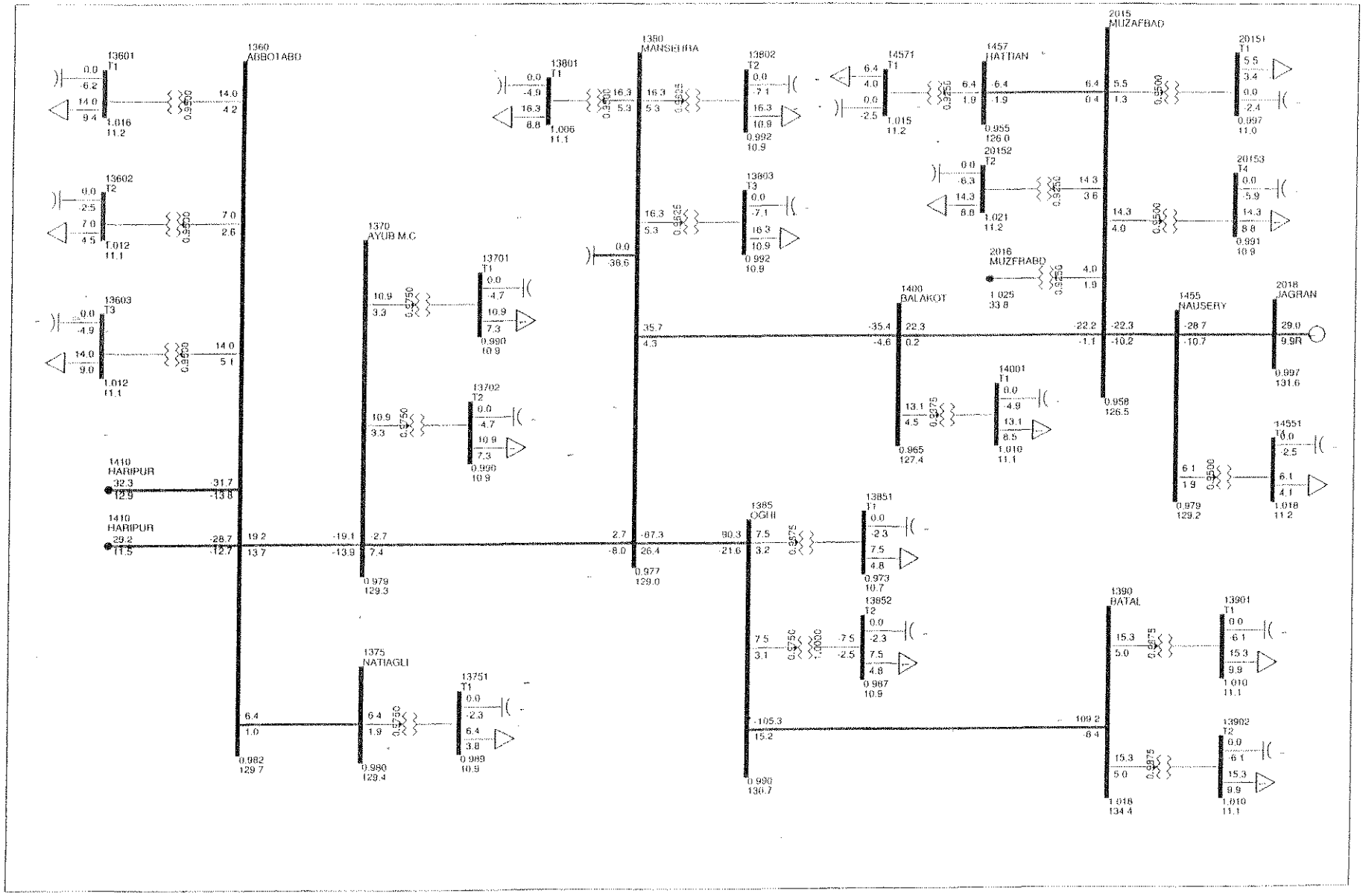

PESCO LOAD FLOW STUDY FOR (DIIP) FIVE YEAR PLAN
YEAR 2018: BASE CASE WITH REINFORCEMENT

Exhibit-1-2018-2.7

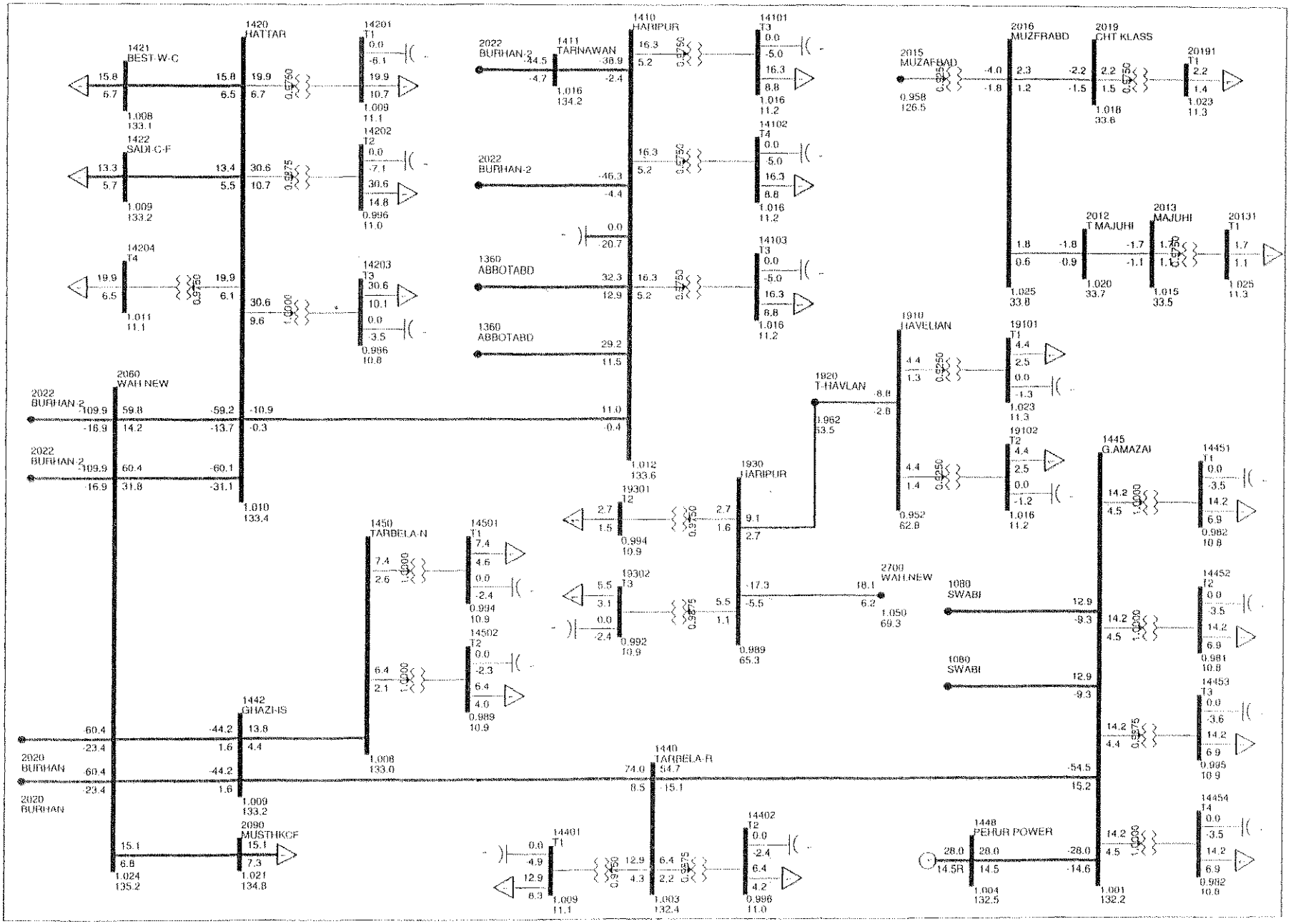

PESCO LOAD FLOW STUDY FOR (DIIP) FIVE YEAR PLAN
YEAR 2018: BASE CASE WITH REINFORCEMENT

Exhibit-1-2018-2.8

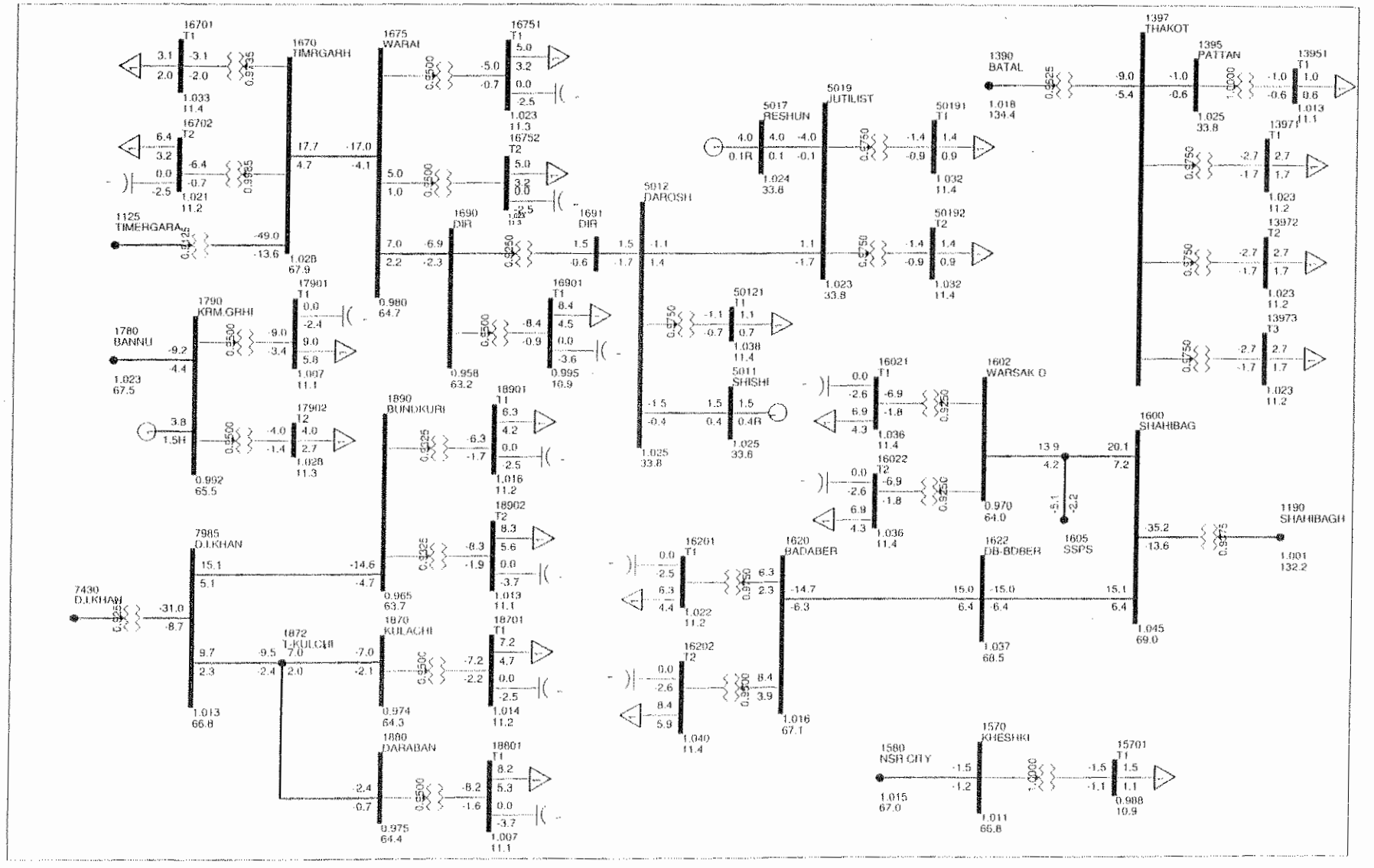

PESCO LOAD FLOW STUDY FOR (DIIP) FIVE YEAR PLAN
YEAR 2019: BASE CASE

Exhibit-1-2019-1.1

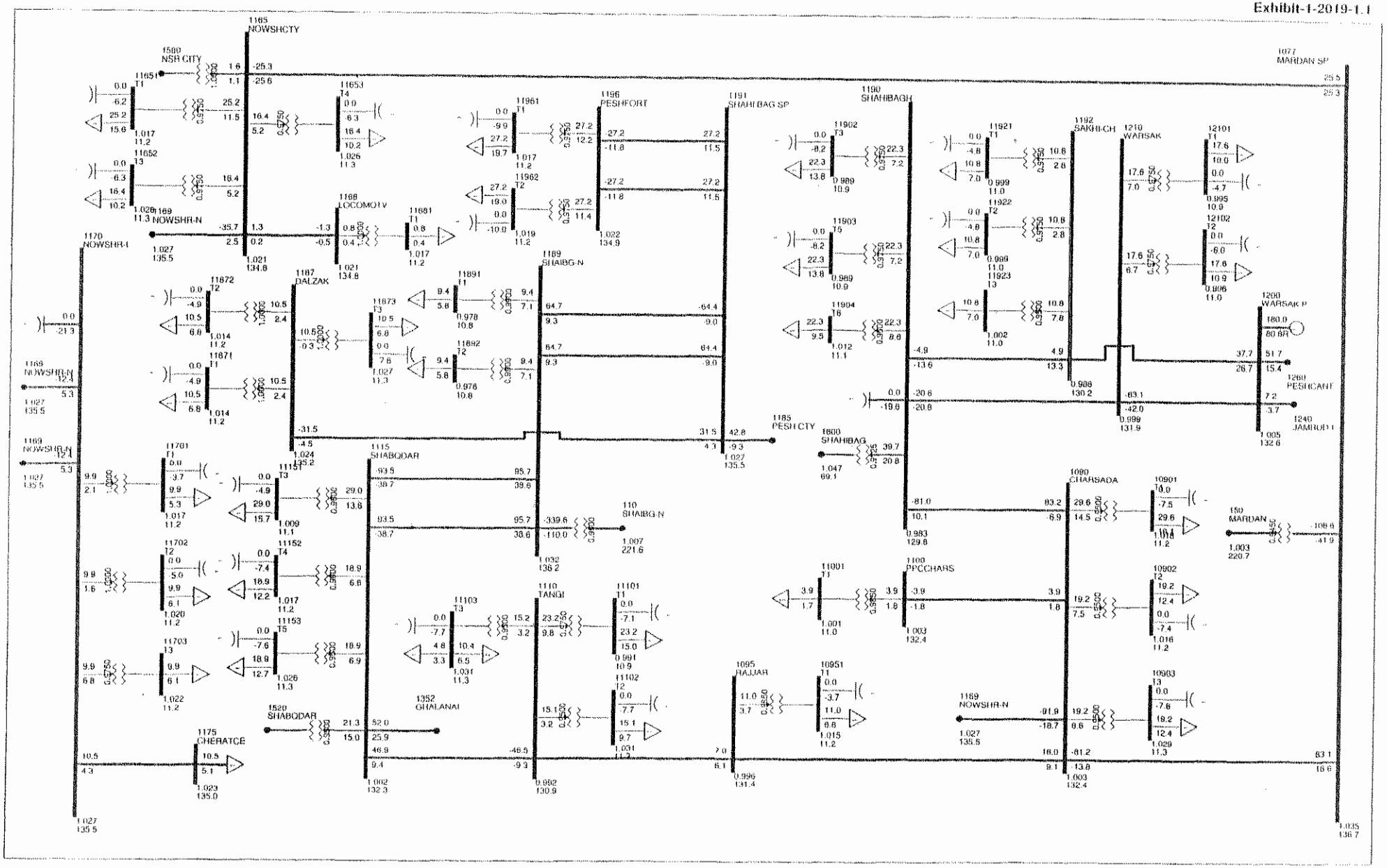

PESCO LOAD FLOW STUDY FOR (DIIP) FIVE YEAR PLAN
YEAR 2019: BASE CASE

Exhibit-1-2019-1.2

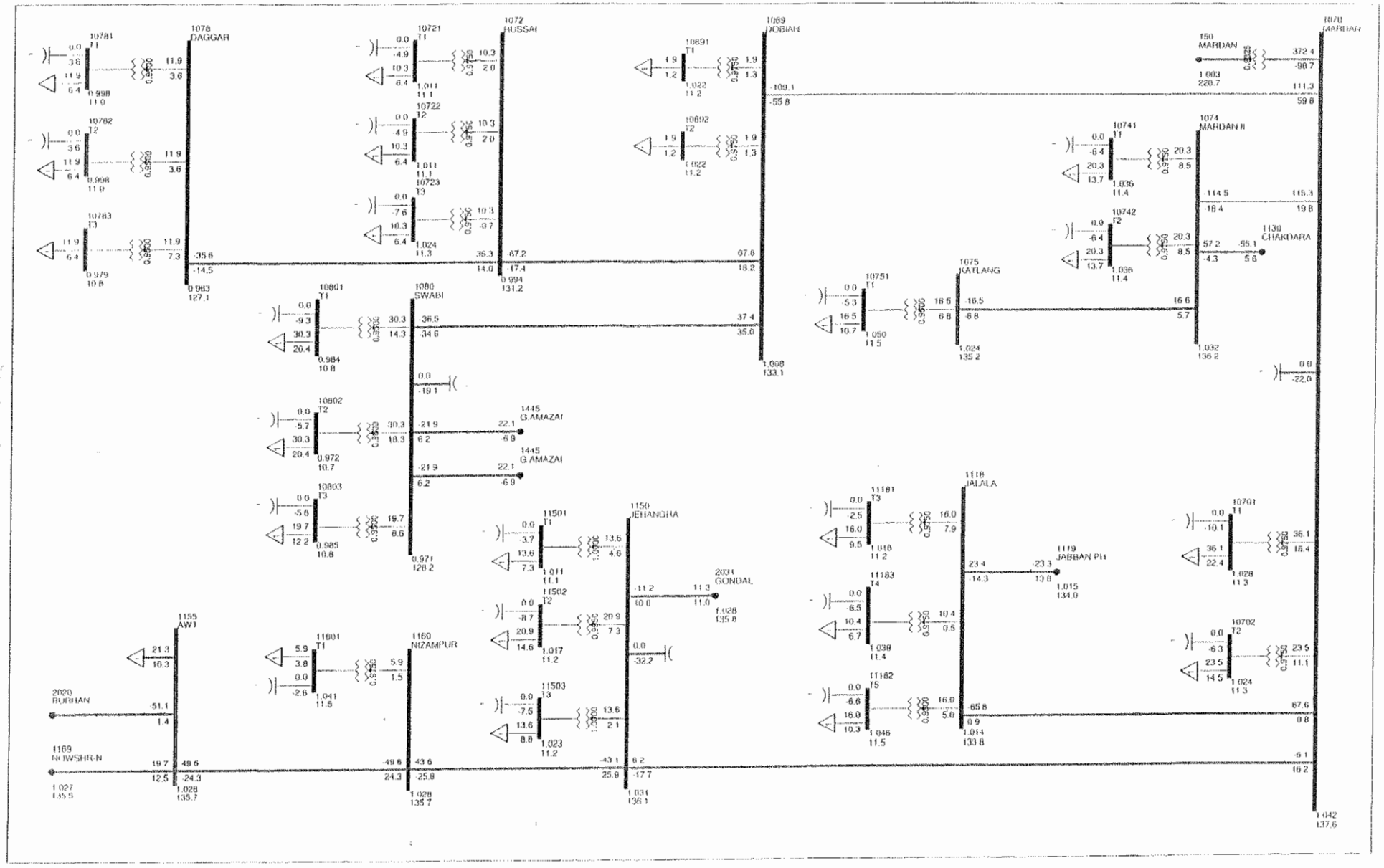

PESCO LOAD FLOW STUDY FOR (DIIP) FIVE YEAR PLAN
YEAR 2019: BASE CASE

Exhibit-1-2019-1.3

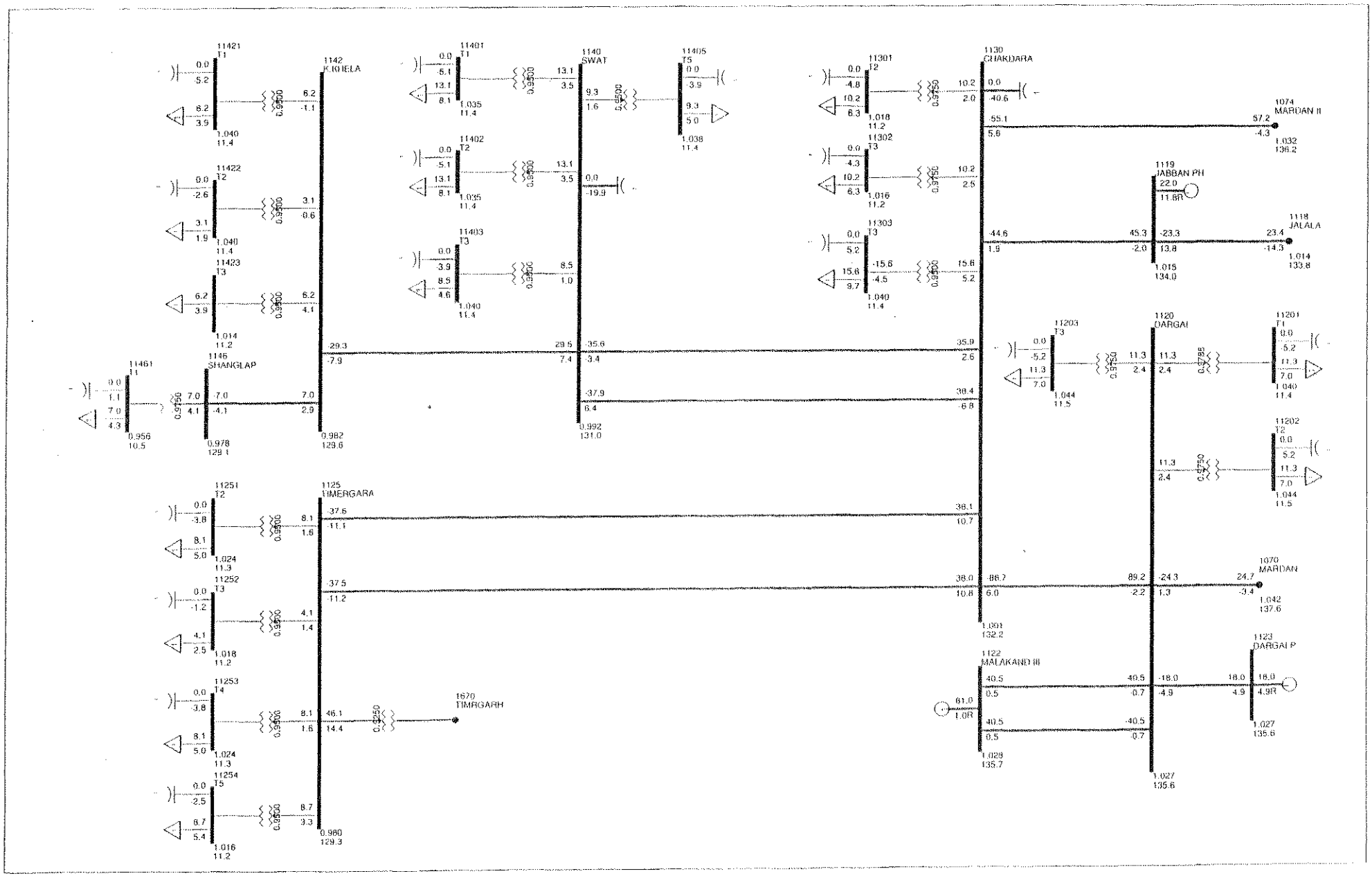

PESCO LOAD FLOW STUDY FOR (DIIP) FIVE YEAR PLAN
YEAR 2019: BASE CASE

Exhibit-1-2019-1.4

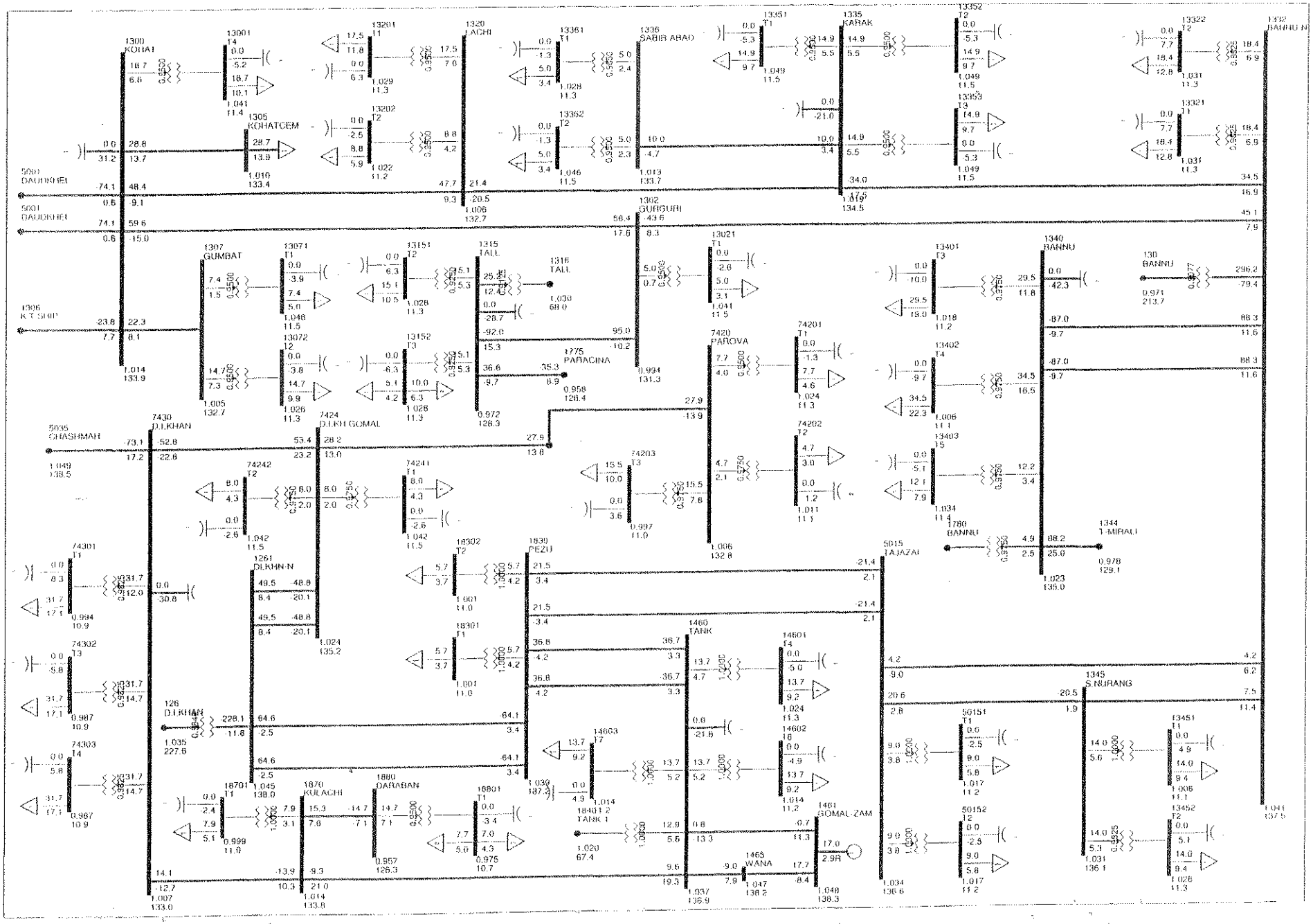

PESCO LOAD FLOW STUDY FOR (DIIP) FIVE YEAR PLAN
YEAR 2019: BASE CASE

Exhibit-1-2019-1.5

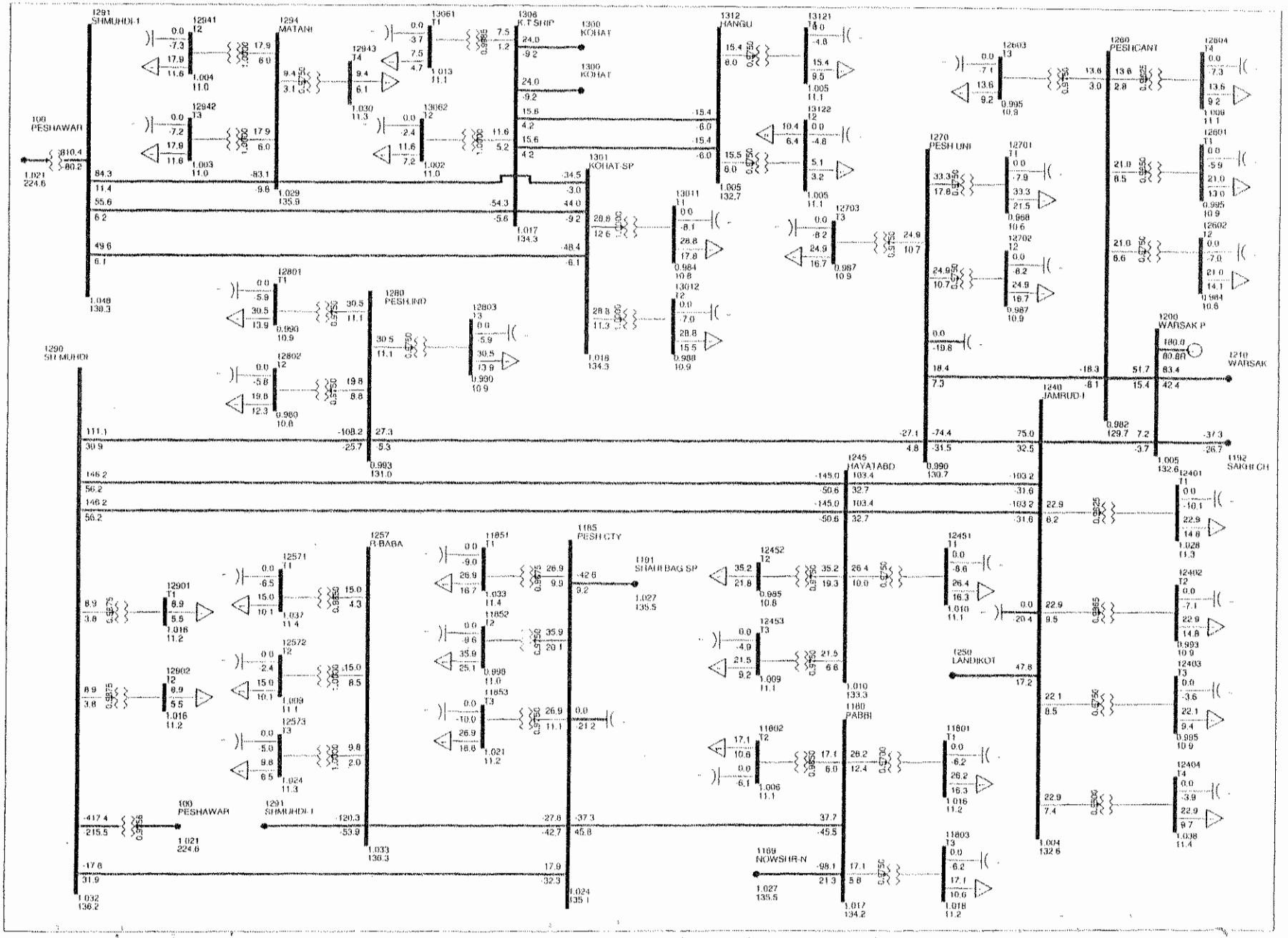

PESCO LOAD FLOW STUDY FOR (DIIP) FIVE YEAR PLAN
YEAR 2019: BASE CASE

Exhibit-1-2019-1.6

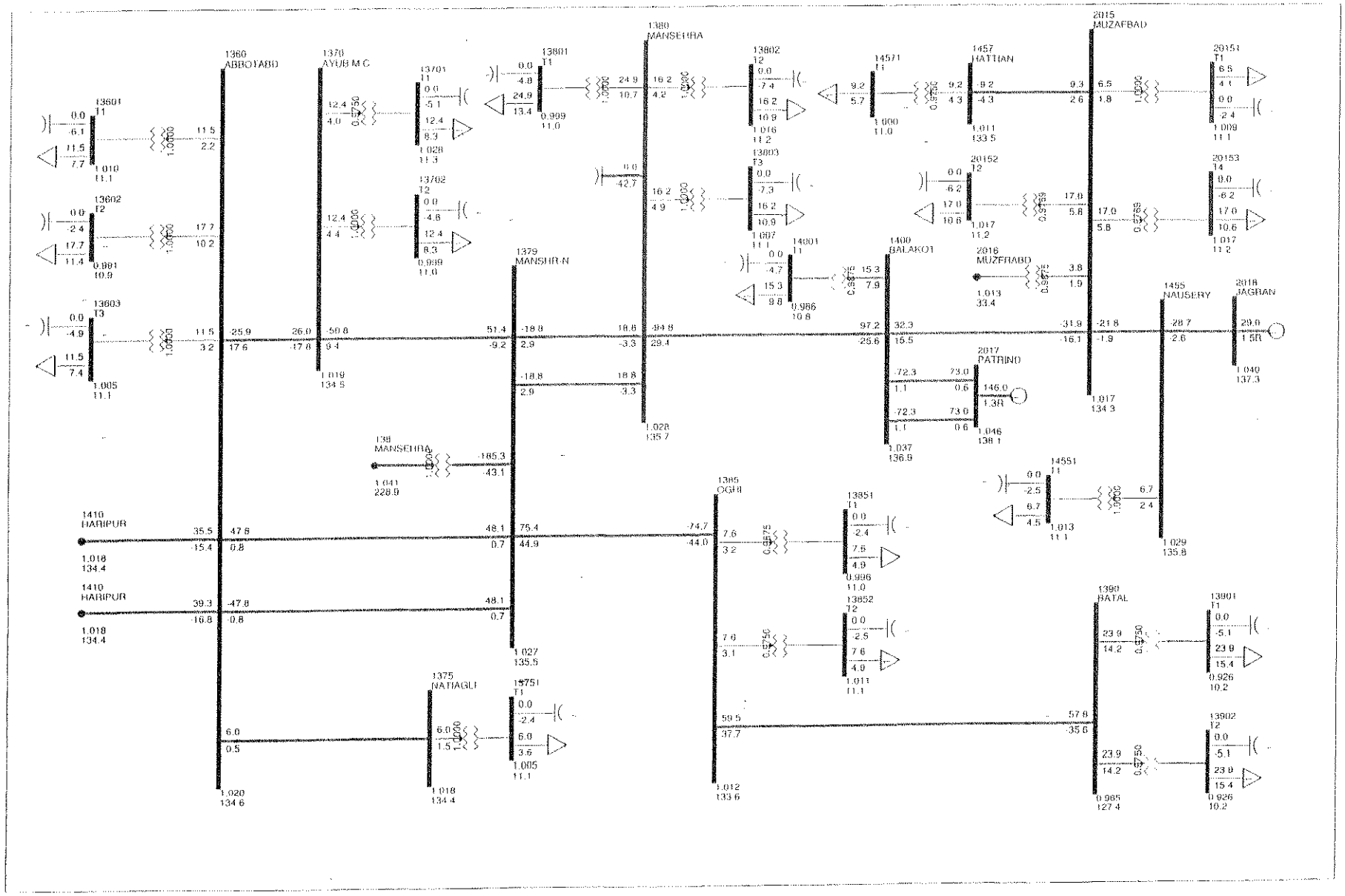

PESCO LOAD FLOW STUDY FOR (DIIP) FIVE YEAR PLAN
YEAR 2019: BASE CASE

Exhibit-1-2019-1.7

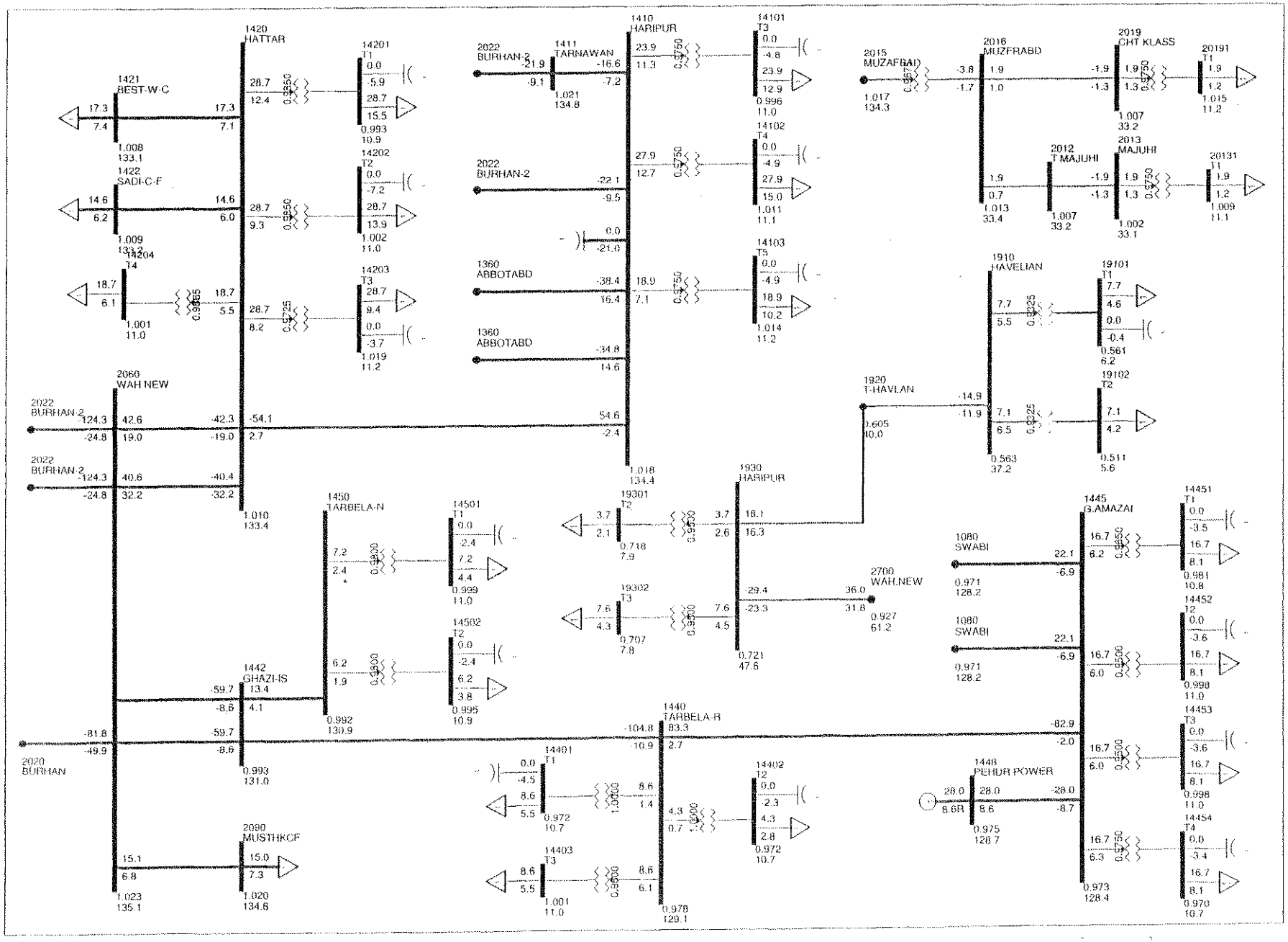

PESCO LOAD FLOW STUDY FOR (DIIP) FIVE YEAR PLAN
YEAR 2019: BASE CASE

Exhibit-1-2019-1.8

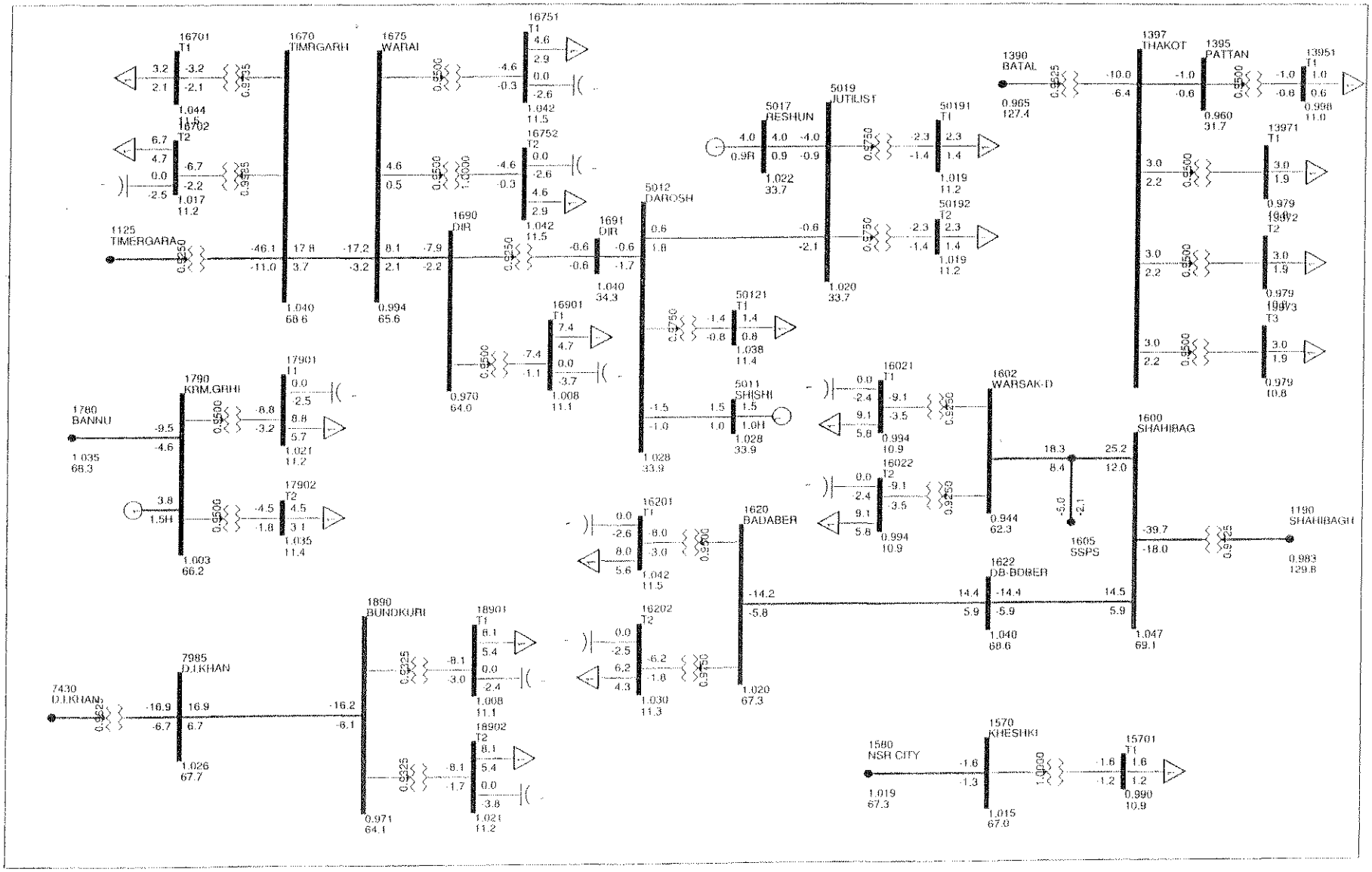

PESCO LOAD FLOW STUDY FOR (DIIP) FIVE YEAR PLAN
YEAR 2019: BASE CASE WITH REINFORCEMENT

Exhibit-1-2019-2.1

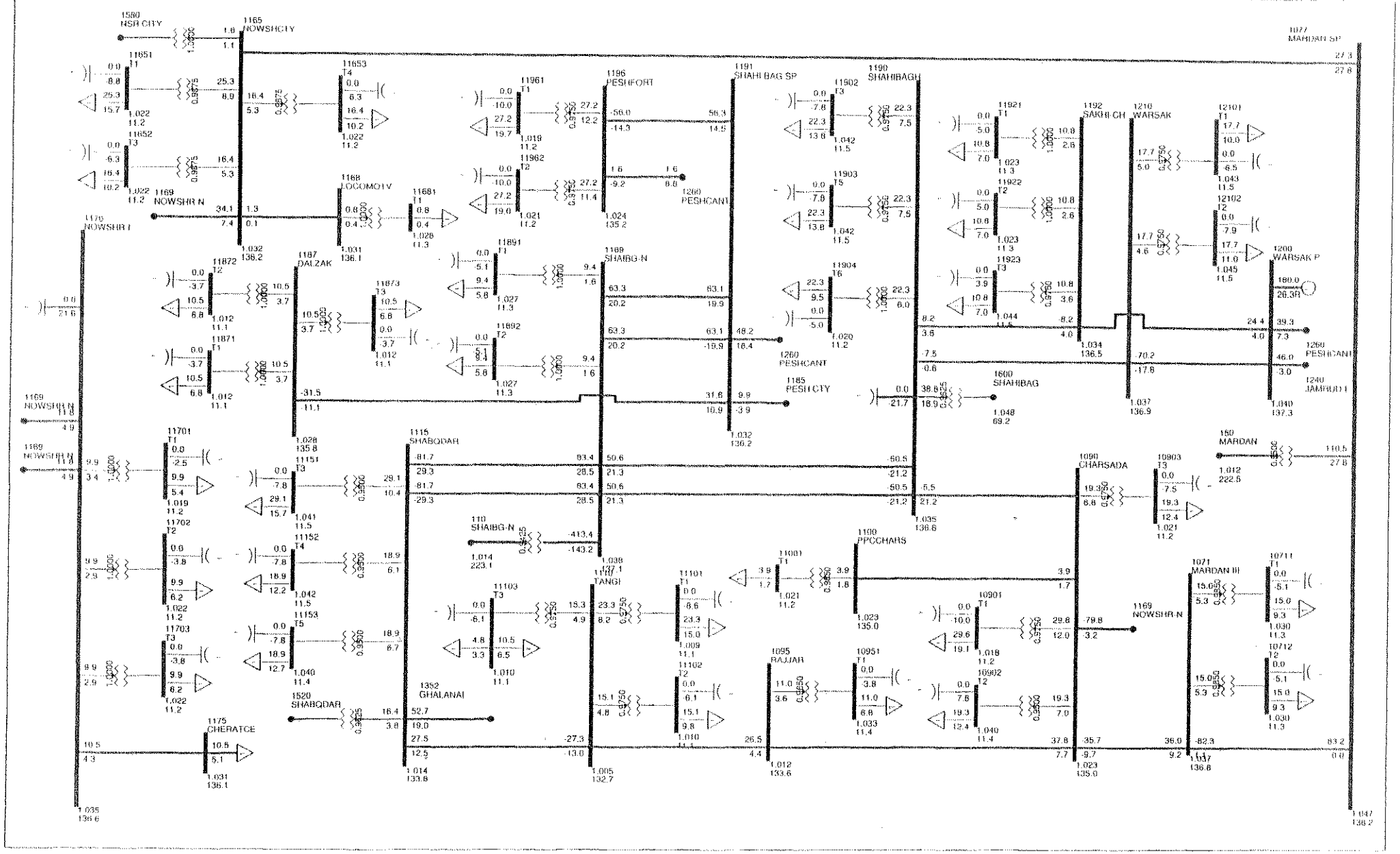

PESCO LOAD FLOW STUDY FOR (DIIP) FIVE YEAR PLAN
YEAR 2019: BASE CASE WITH REINFORCEMENT

Exhibit-1-2019-2.2

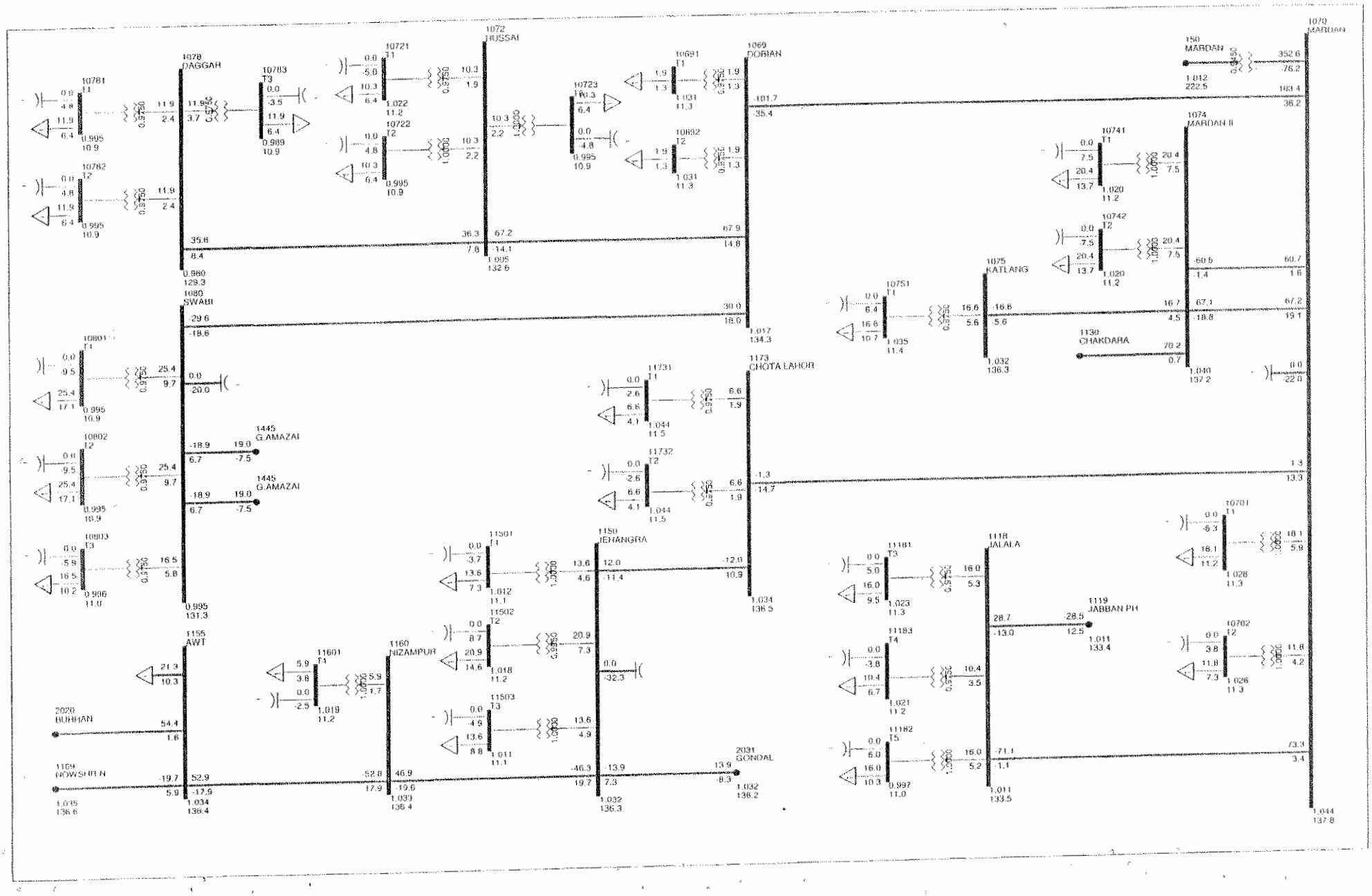

PESCO LOAD FLOW STUDY FOR (DIIP) FIVE YEAR PLAN
YEAR 2019: BASE CASE WITH REINFORCEMENT

Exhibit-1-2019-2.3

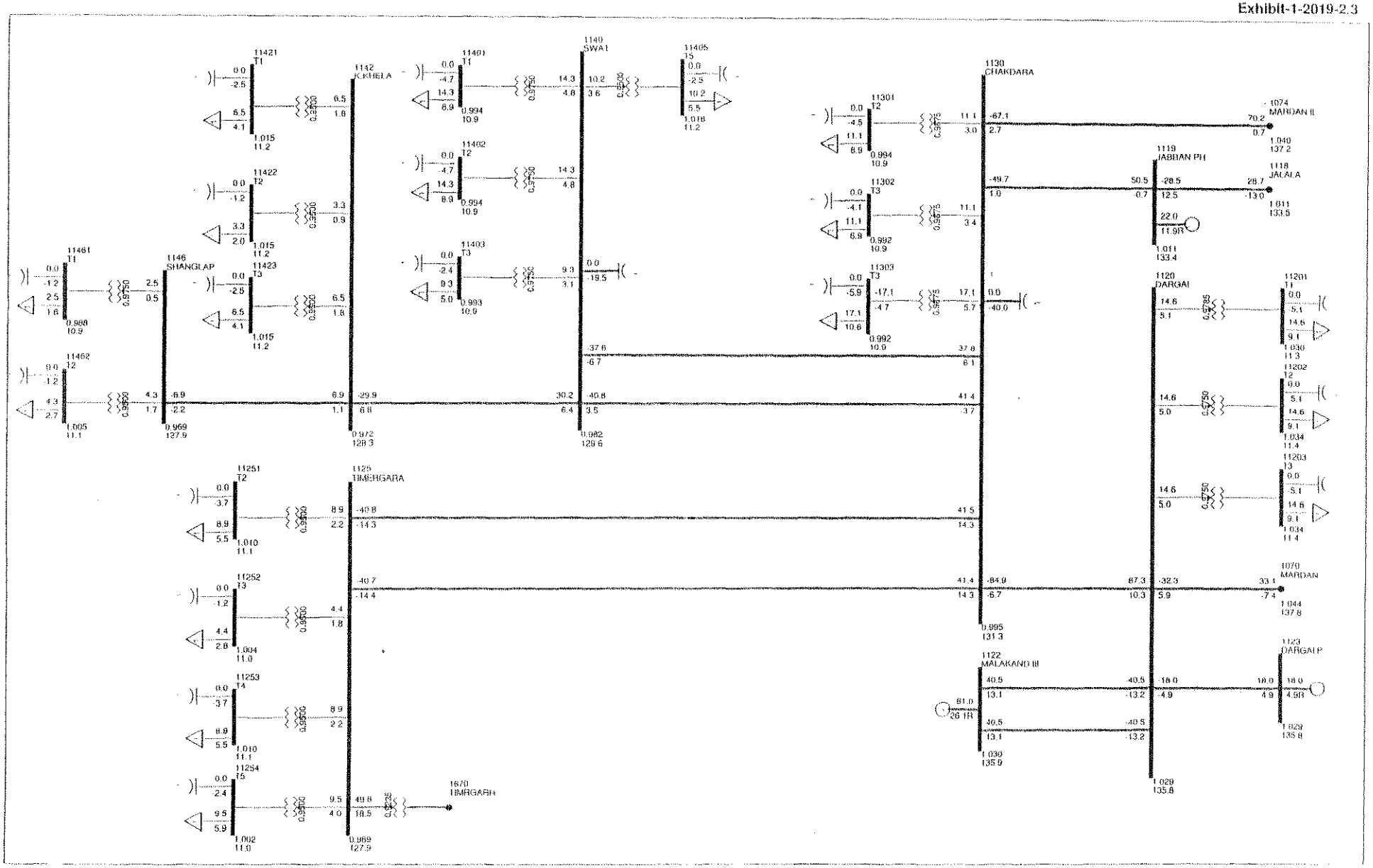

PESCO LOAD FLOW STUDY FOR (DIIP) FIVE YEAR PLAN
YEAR 2019: BASE CASE WITH REINFORCEMENT

Exhibit-1-2019-2.4

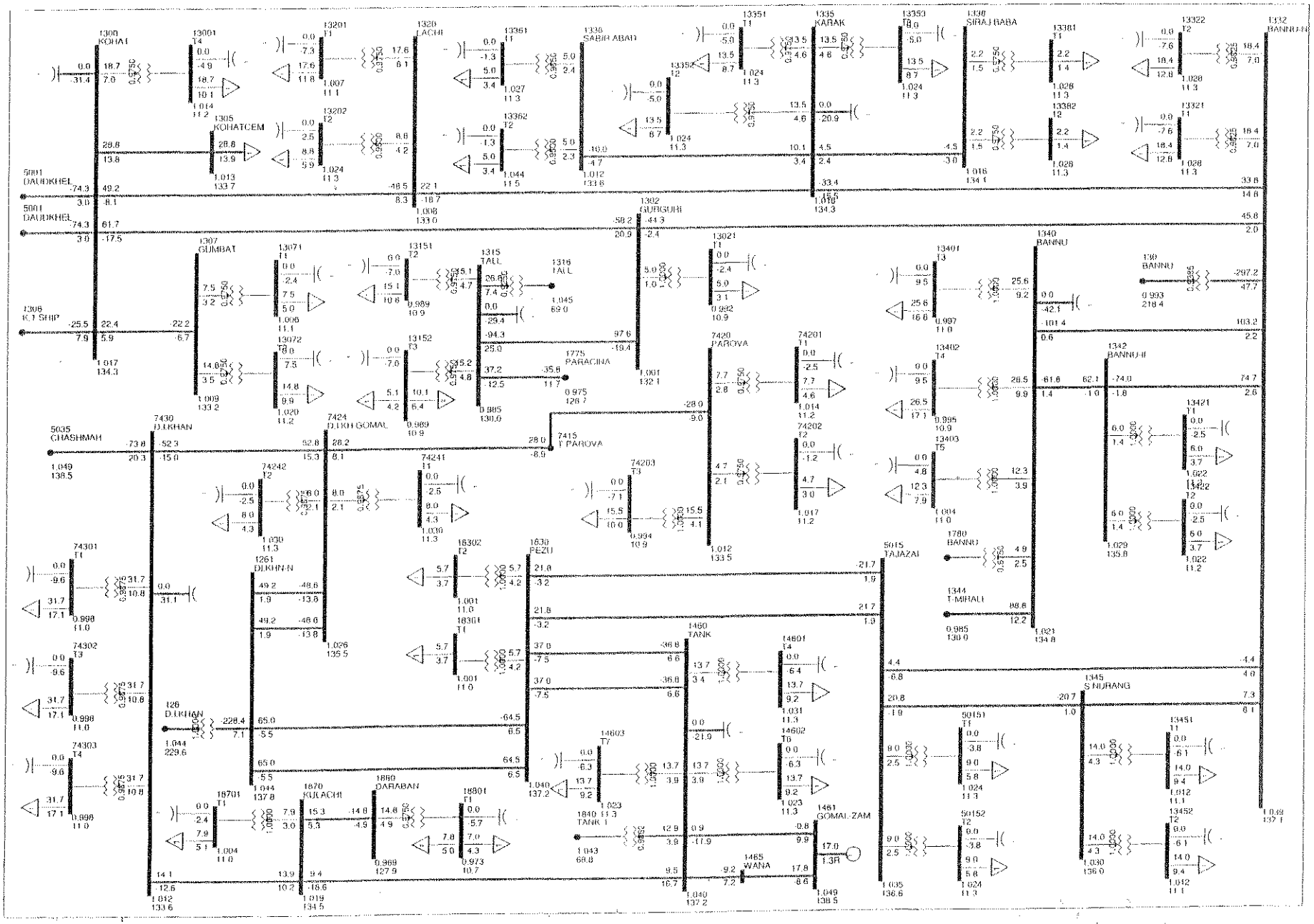

PESCO LOAD FLOW STUDY FOR (DIIP) FIVE YEAR PLAN
YEAR 2019: BASE CASE WITH REINFORCEMENT

Exhibit-1-2019-2.5

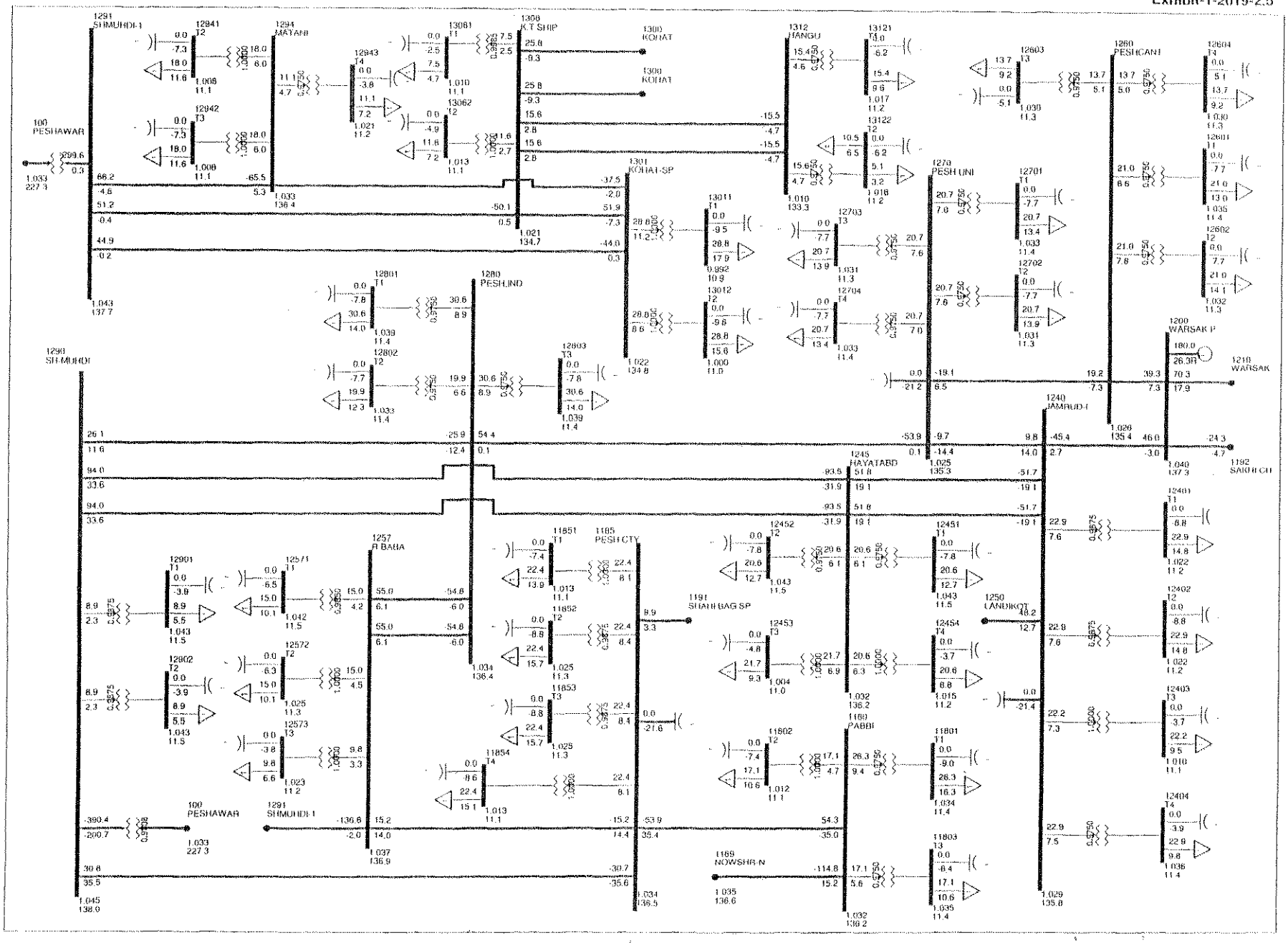

PESCO LOAD FLOW STUDY FOR (DIIP) FIVE YEAR PLAN
YEAR 2019: BASE CASE WITH REINFORCEMENT

Exhibit-1-2019-2.6

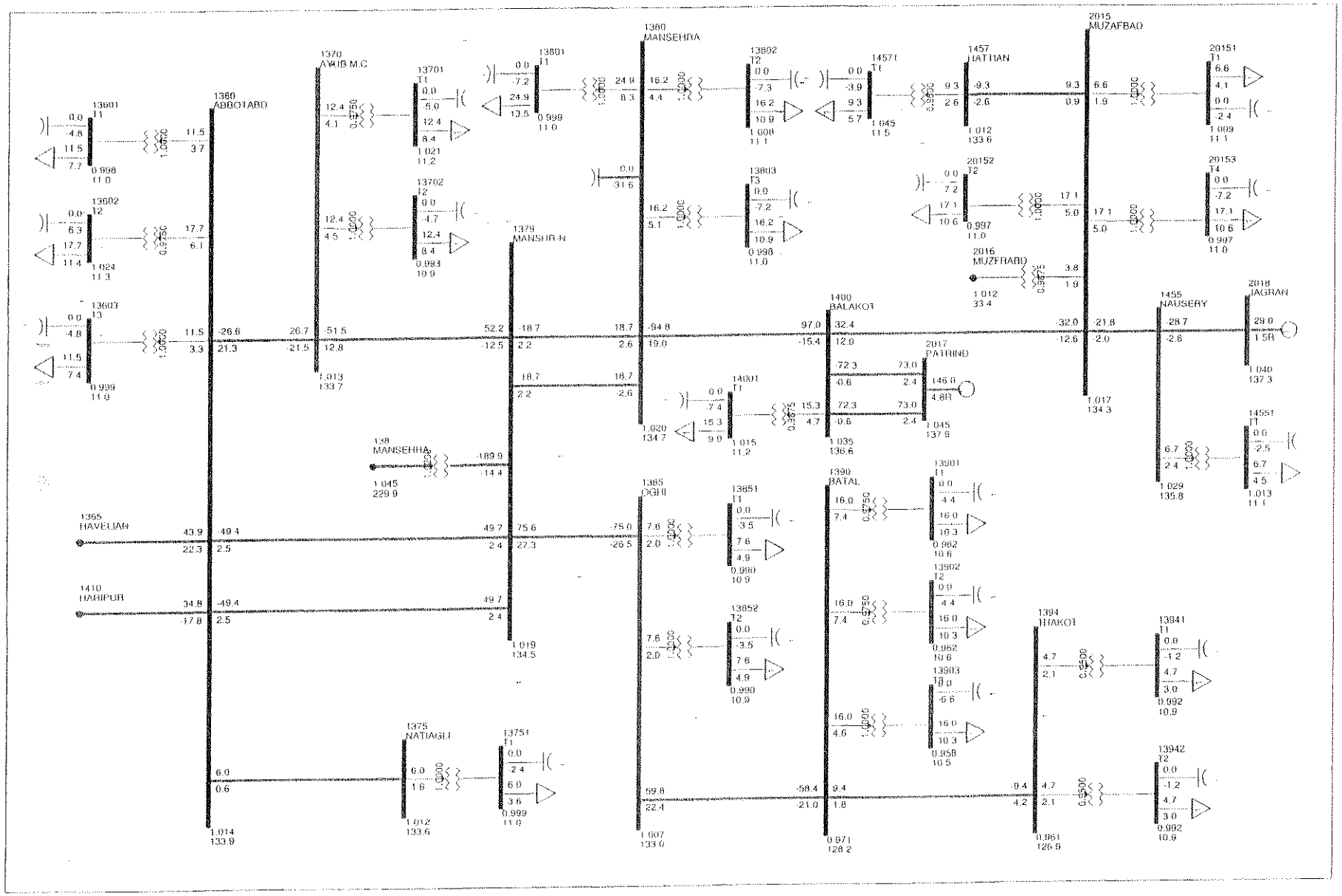

PESCO LOAD FLOW STUDY FOR (DIIP) FIVE YEAR PLAN
YEAR 2019: BASE CASE WITH REINFORCEMENT

Exhibit-1-2019-2.7

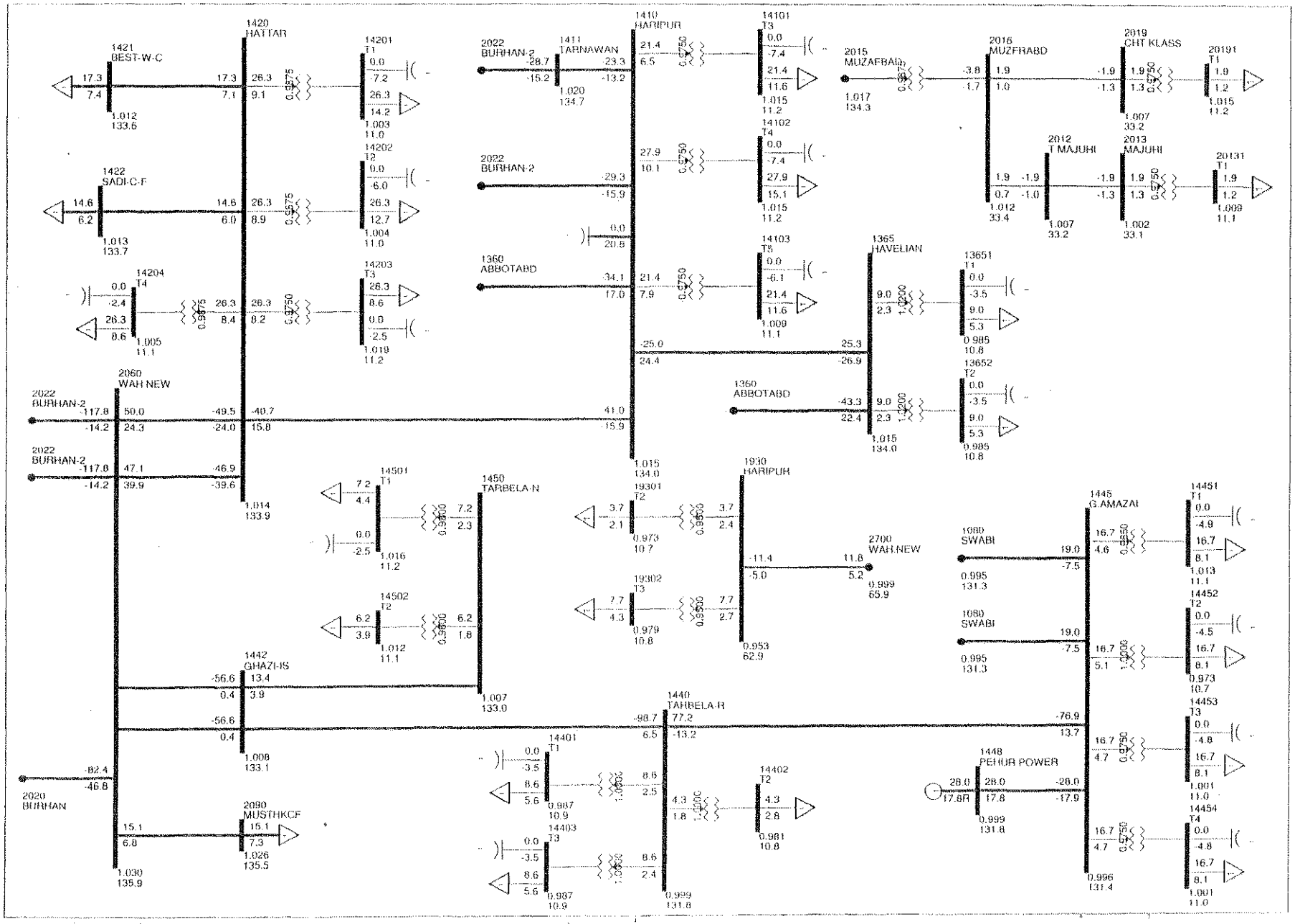

PESCO LOAD FLOW STUDY FOR (DIIP) FIVE YEAR PLAN
YEAR 2019: BASE CASE WITH REINFORCEMENT

Exhibit-1-2019-2.8

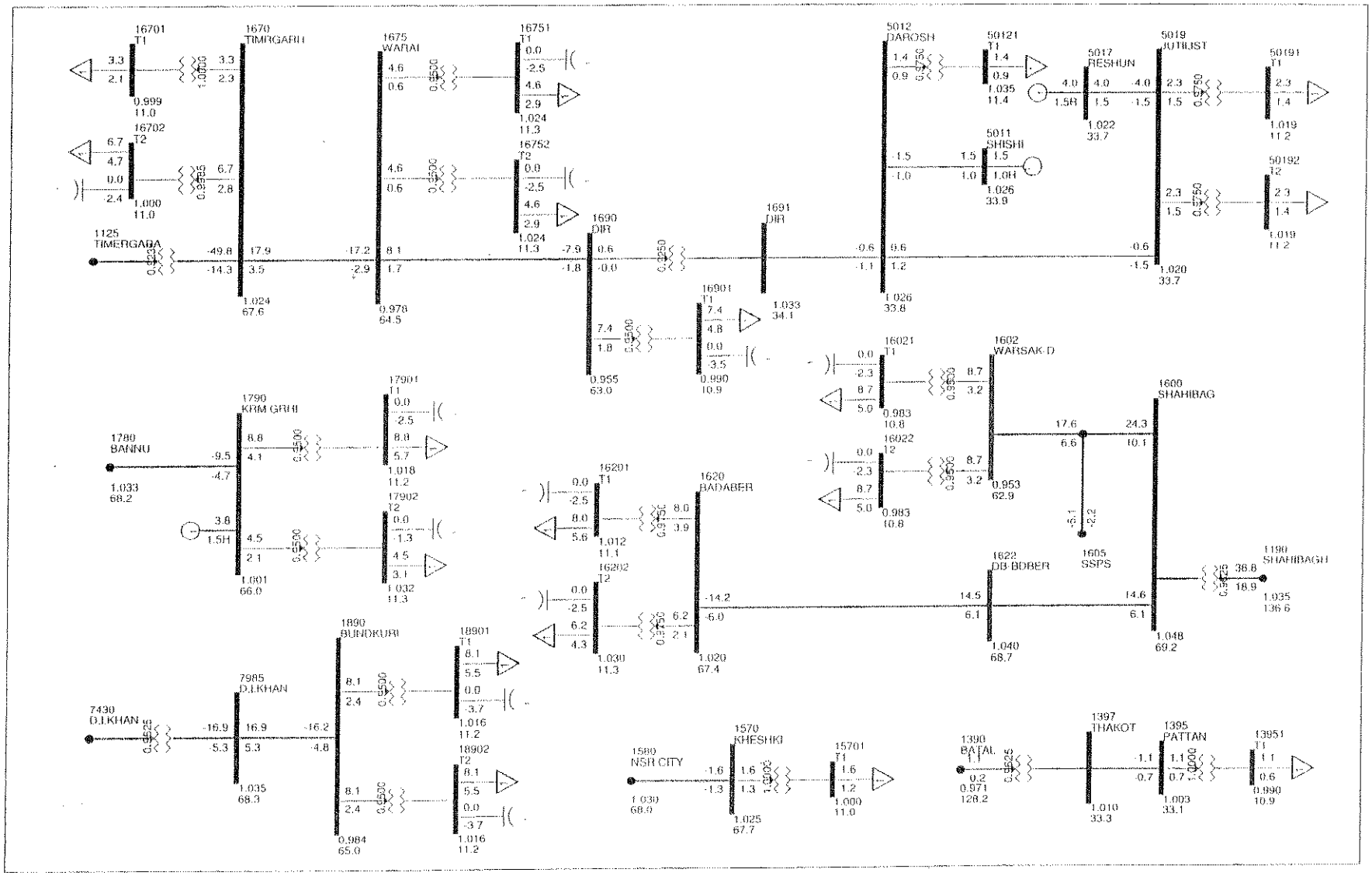

PESCO LOAD FLOW STUDY FOR (DIIP) FIVE YEAR PLAN
YEAR 2020: BASE CASE

Exhibit-1-2020-1.1

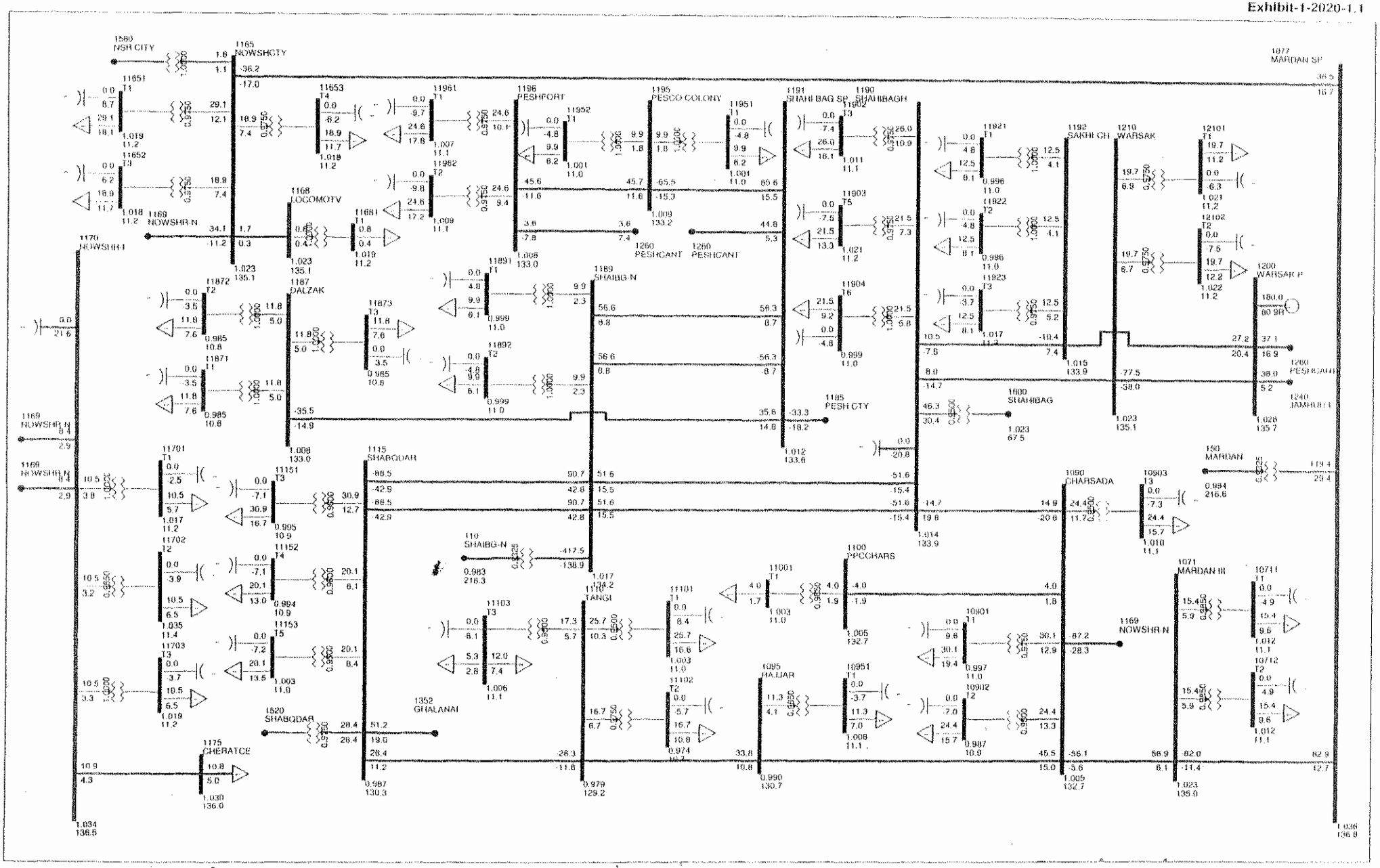

PESCO LOAD FLOW STUDY FOR (DIIP) FIVE YEAR PLAN
YEAR 2020: BASE CASE

Exhibit-1-2020-1.2

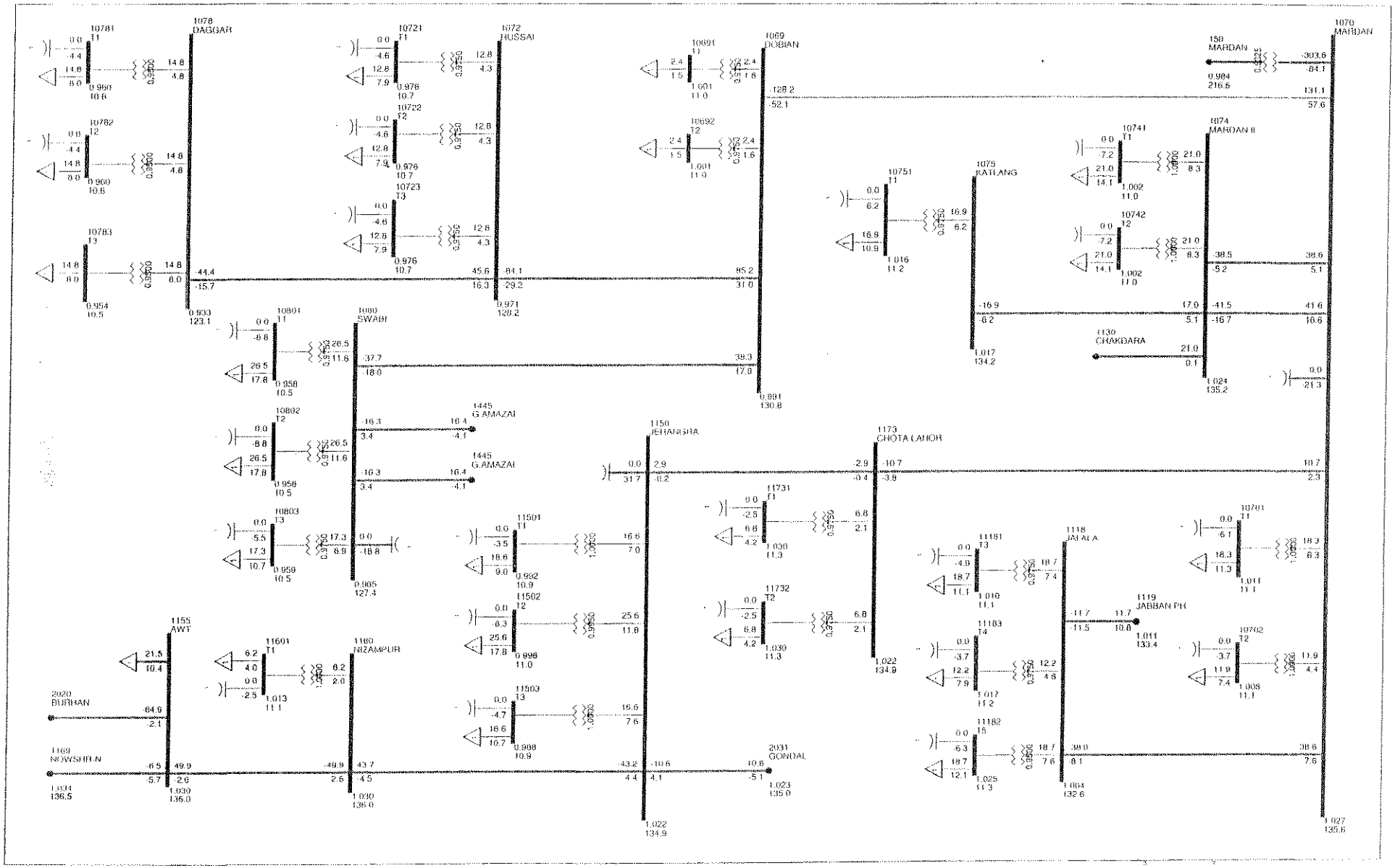

PESCO LOAD FLOW STUDY FOR (DIIP) FIVE YEAR PLAN
YEAR 2020: BASE CASE

Exhibit-1-2020-1.3

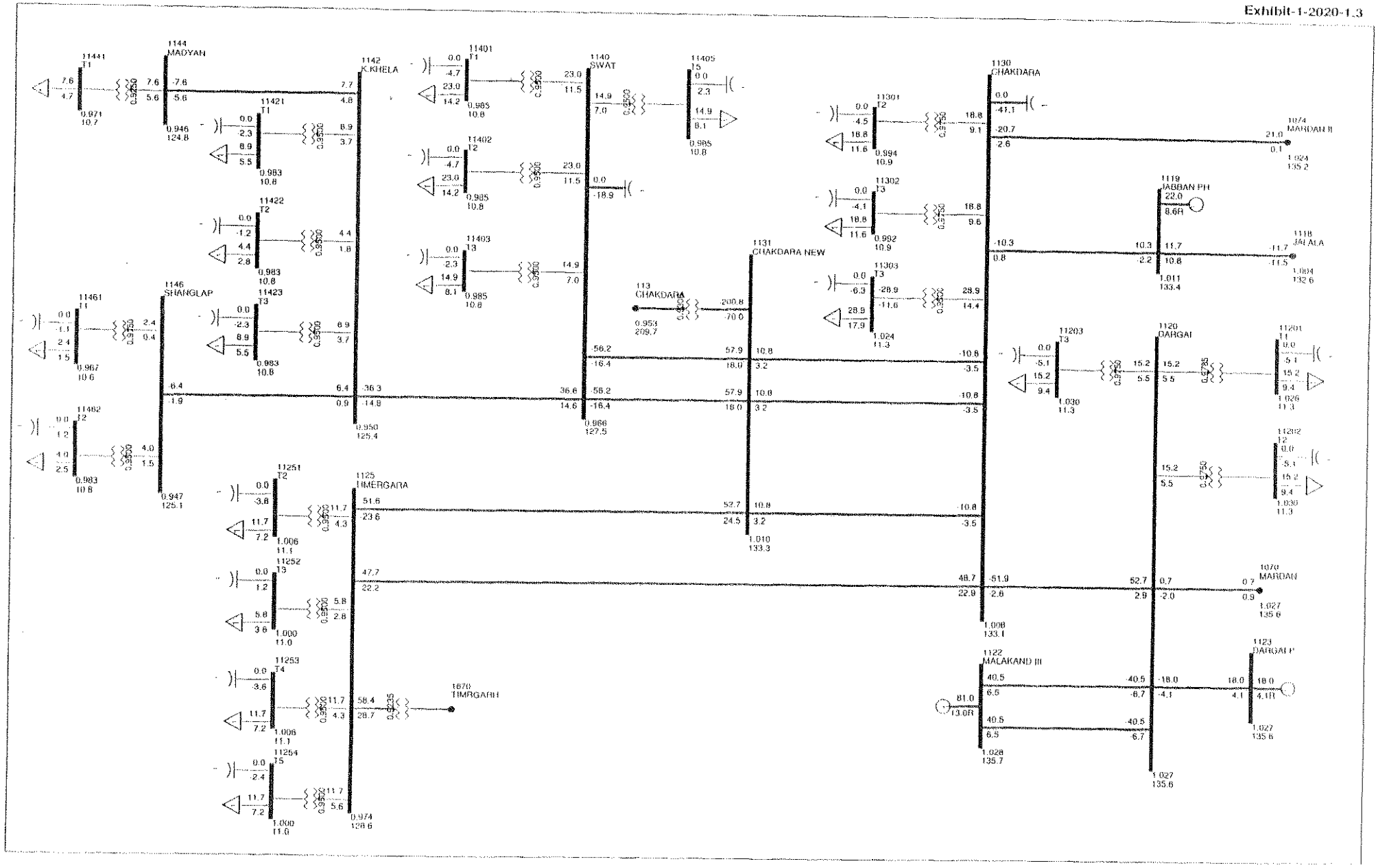

PESCO LOAD FLOW STUDY FOR (DIIP) FIVE YEAR PLAN
YEAR 2020: BASE CASE

Exhibit-1-2020-1.4

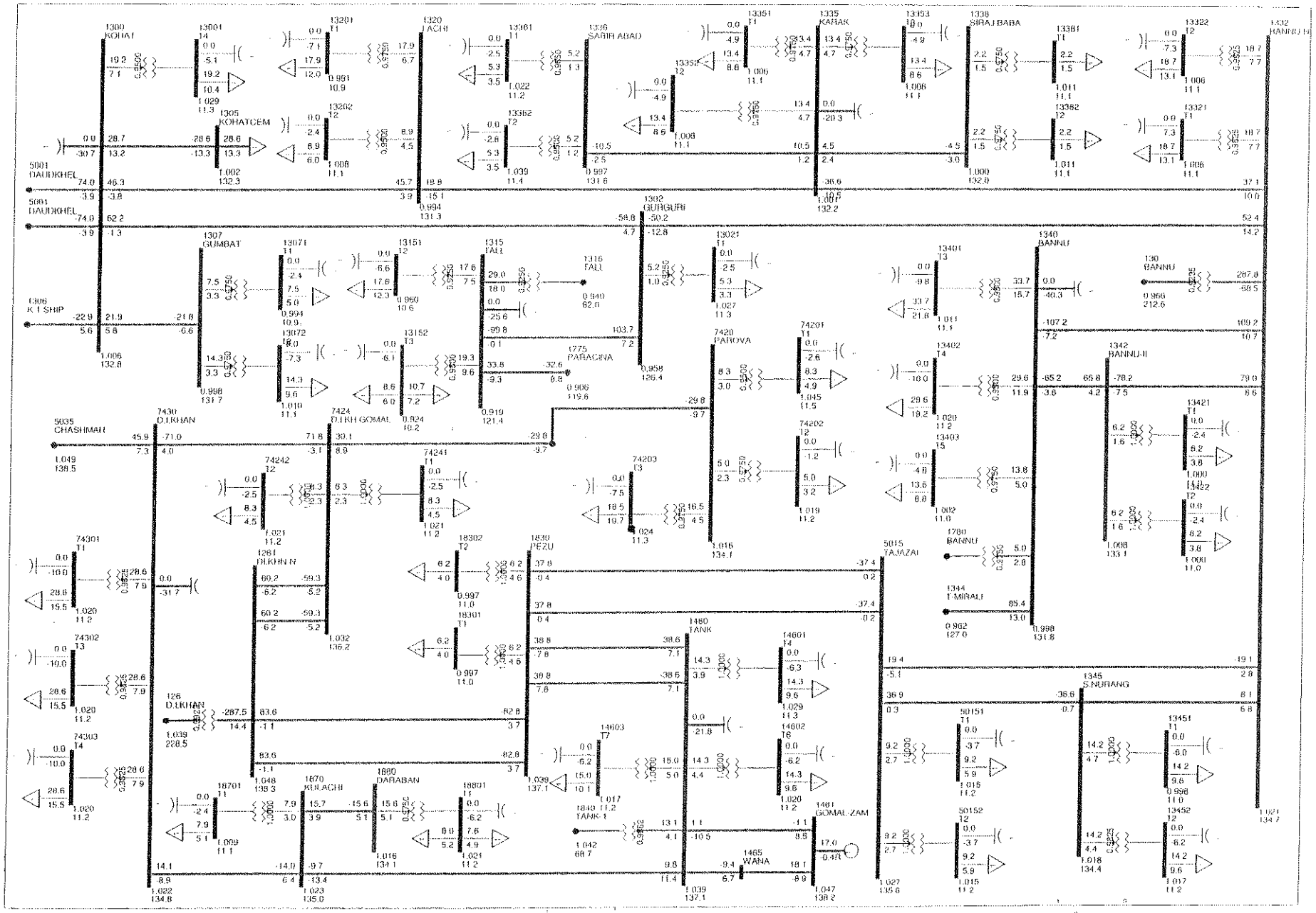

PESCO LOAD FLOW STUDY FOR (DIIP) FIVE YEAR PLAN
YEAR 2020: BASE CASE

Exhibit-1-2020-1.5

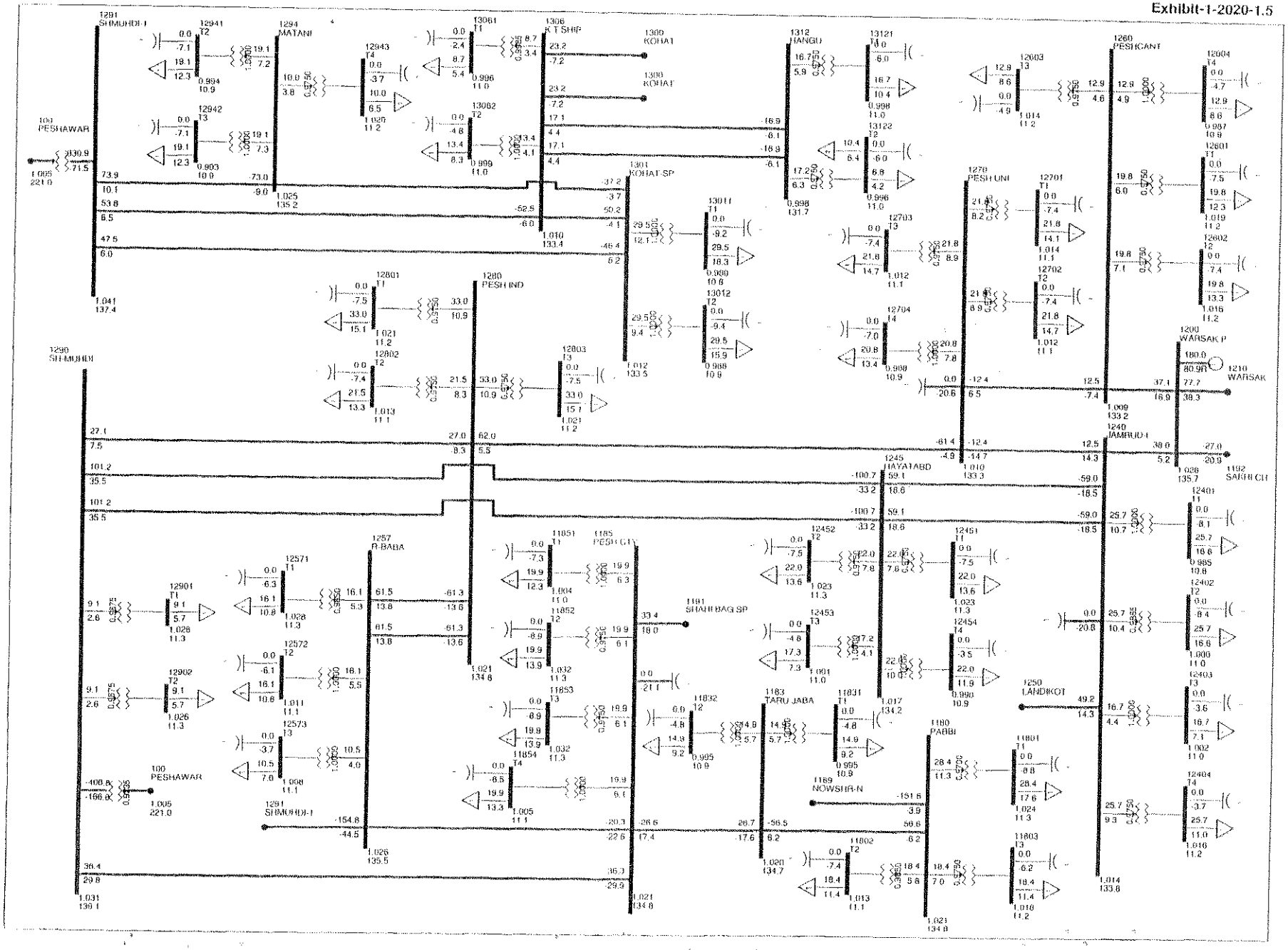

PESCO LOAD FLOW STUDY FOR (DIIP) FIVE YEAR PLAN
YEAR 2020: BASE CASE

Exhibit-1-2020-1.6

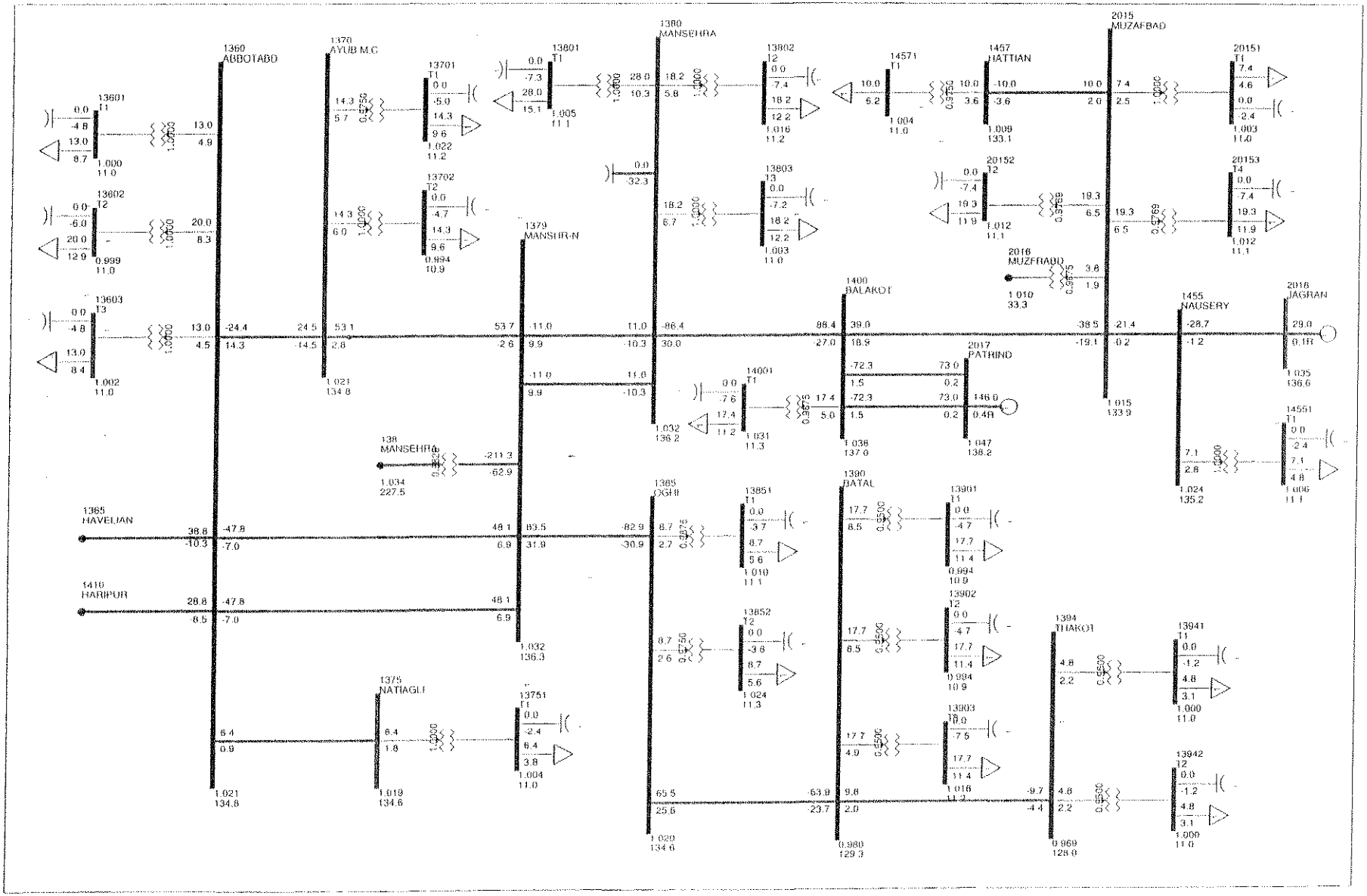

PESCO LOAD FLOW STUDY FOR (DIIP) FIVE YEAR PLAN
YEAR 2020: BASE CASE

Exhibit-1-2020-1.7

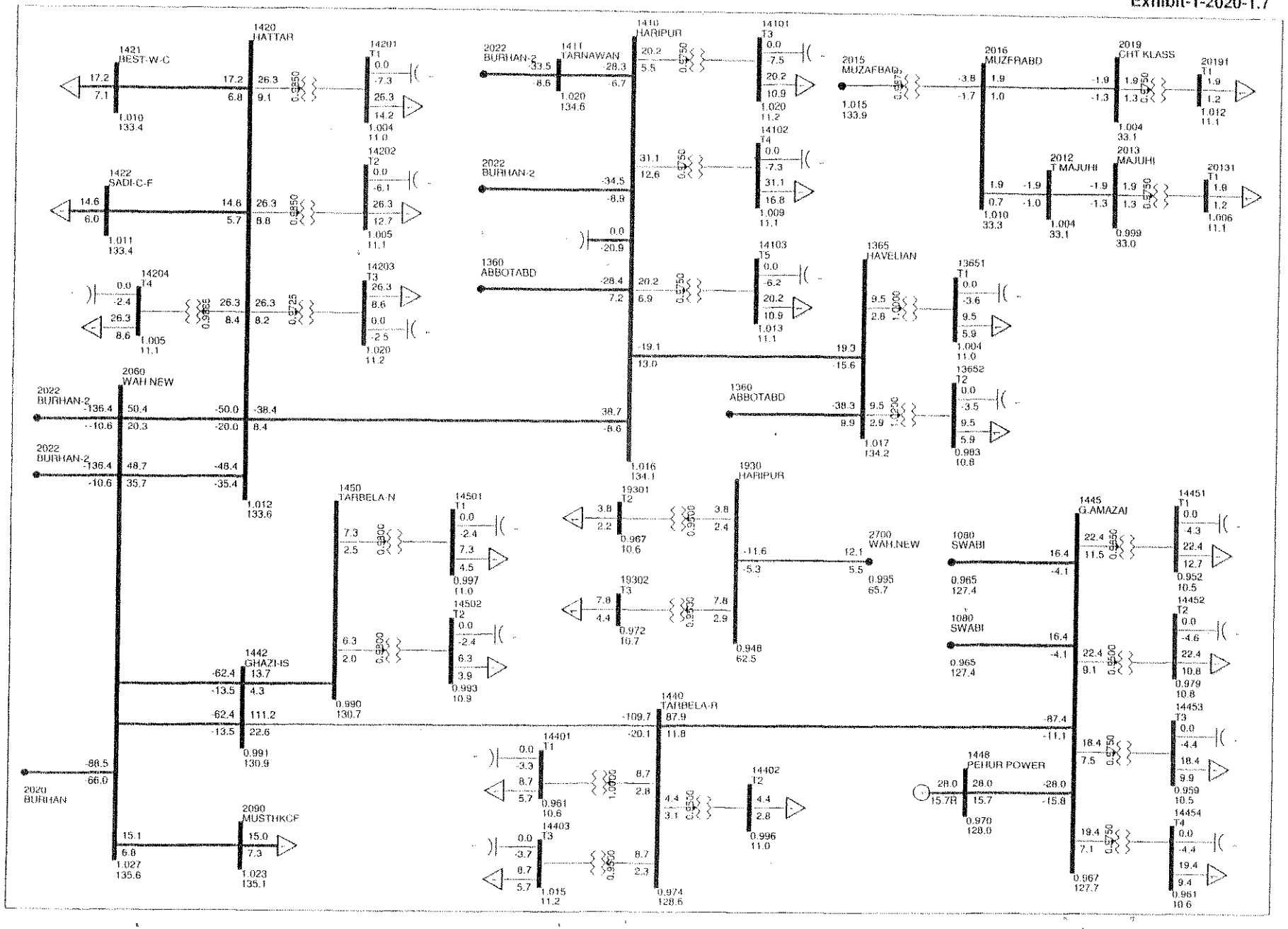

PESCO LOAD FLOW STUDY FOR (DIIP) FIVE YEAR PLAN
YEAR 2020: BASE CASE

Exhibit-1-2020-1.8

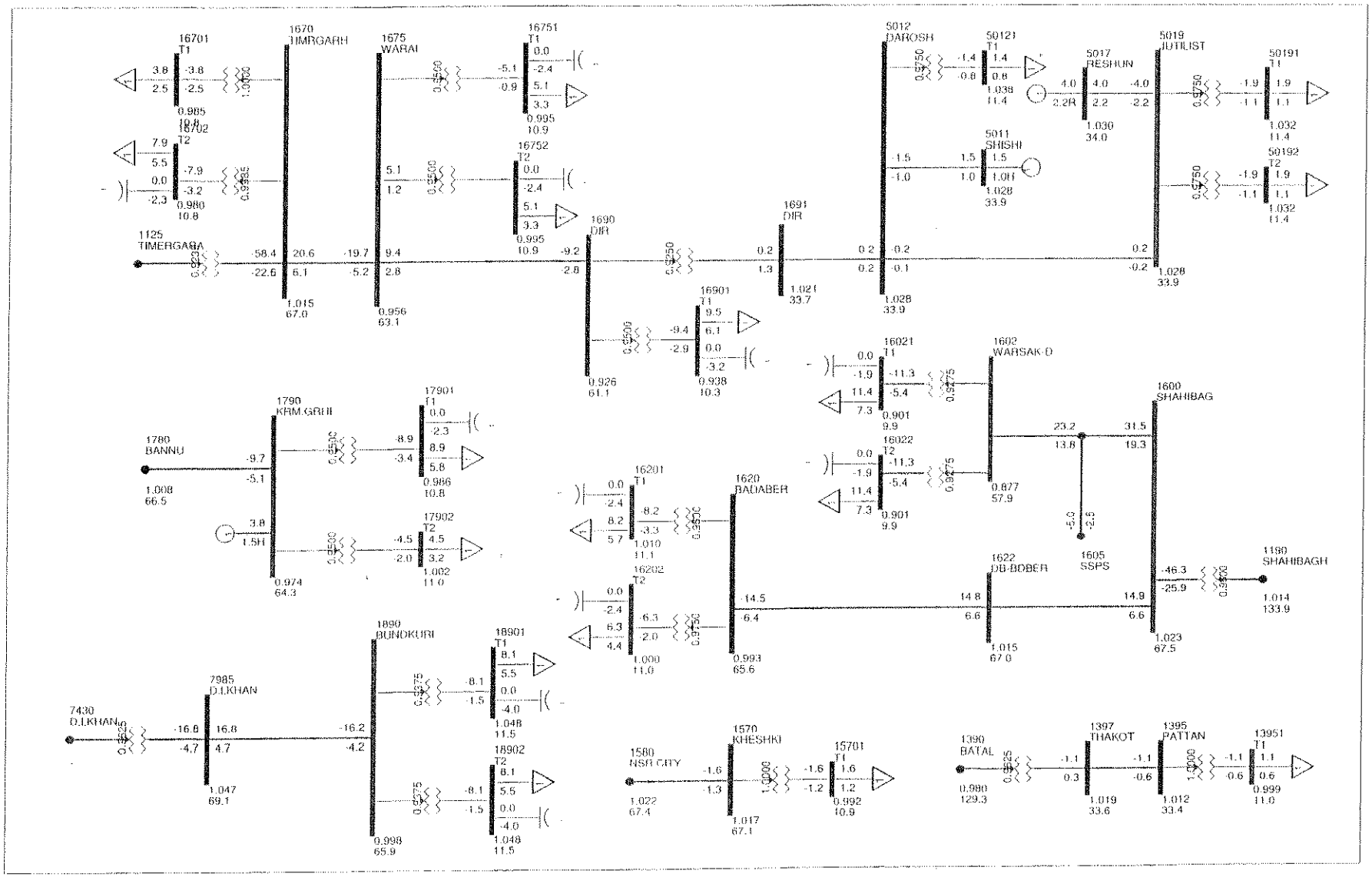

PESCO LOAD FLOW STUDY FOR (DIIP) FIVE YEAR PLAN
YEAR 2020: BASE CASE WITH REINFORCEMENT

Exhibit-1-2020-2.1

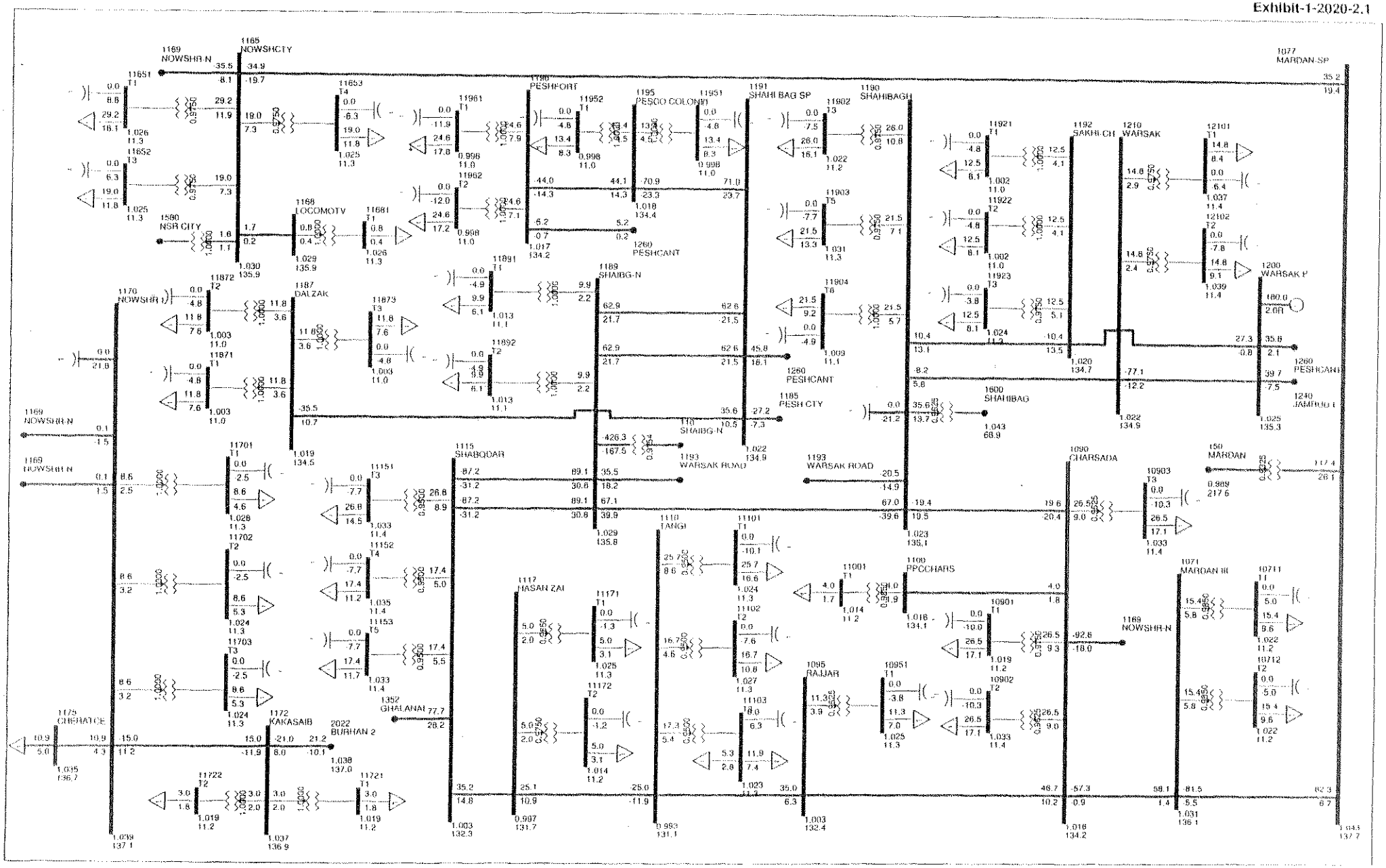

PESCO LOAD FLOW STUDY FOR (DIIP) FIVE YEAR PLAN
YEAR 2020: BASE CASE WITH REINFORCEMENT

Exhibit-1-2020-2.2

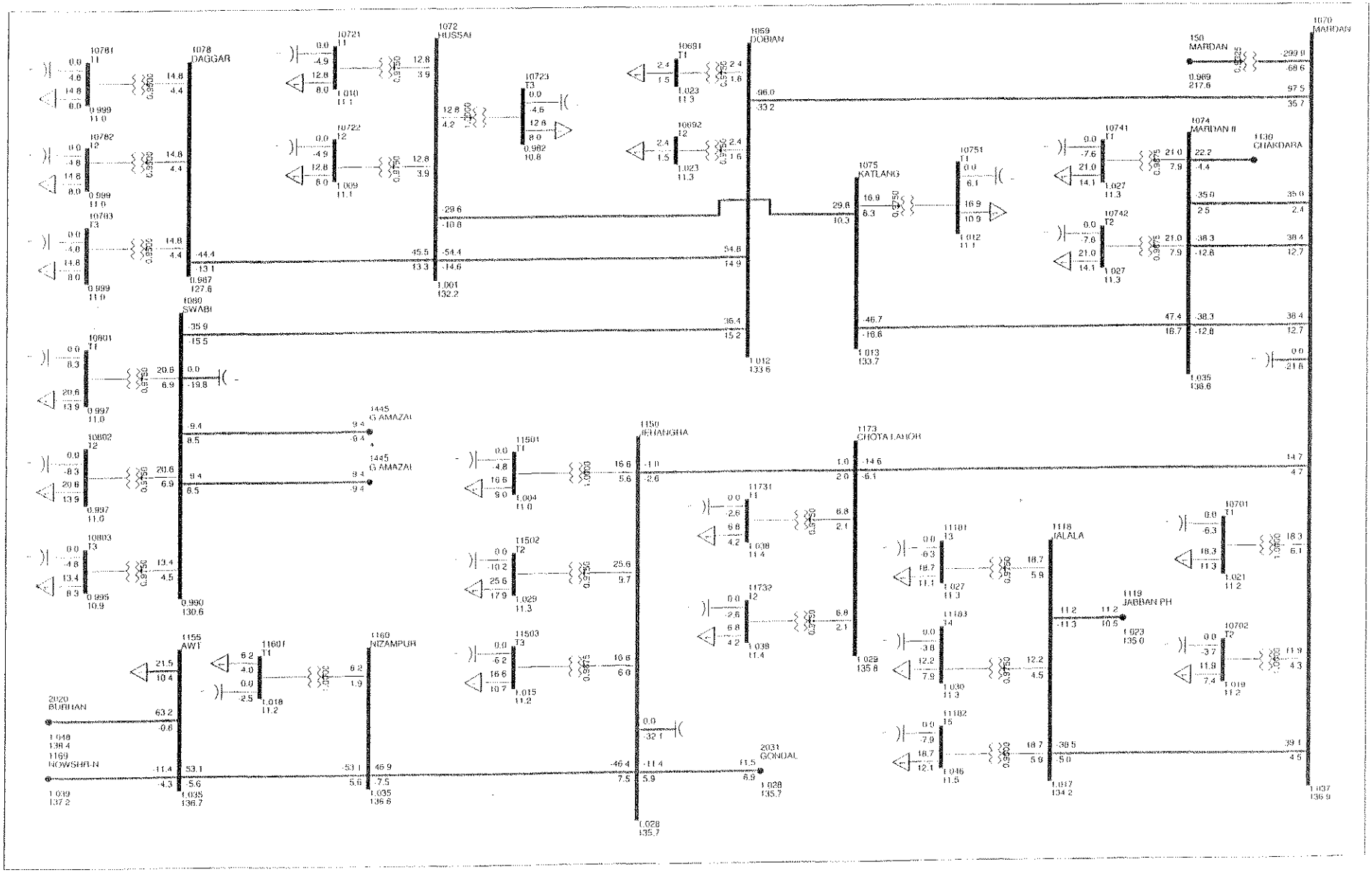

PESCO LOAD FLOW STUDY FOR (DIIP) FIVE YEAR PLAN
YEAR 2020: BASE CASE WITH REINFORCEMENT

Exhibit-1-2020-2.3

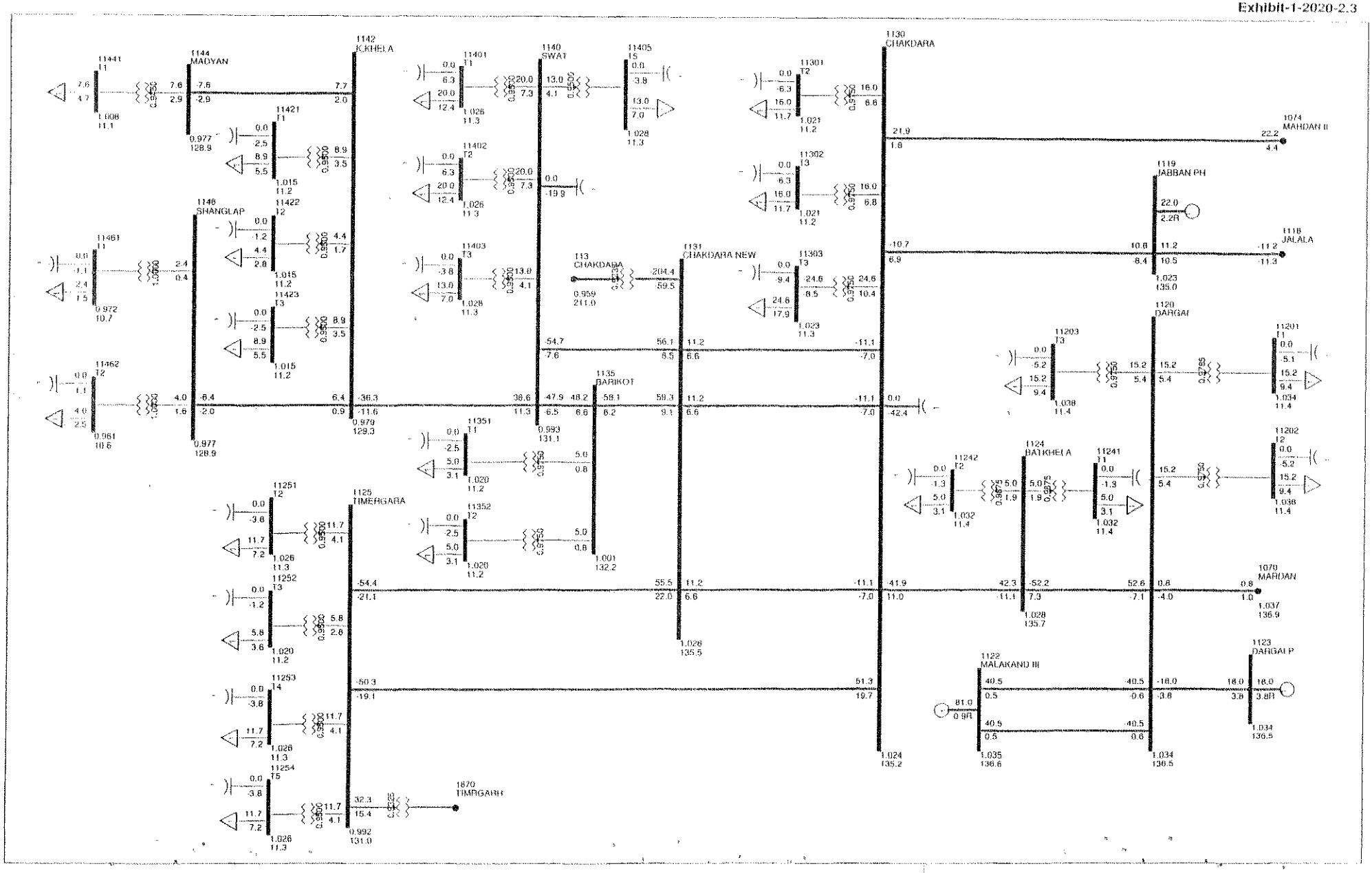

PESCO LOAD FLOW STUDY FOR (DIIP) FIVE YEAR PLAN
YEAR 2020: BASE CASE WITH REINFORCEMENT

Exhibit-1-2020-2.4

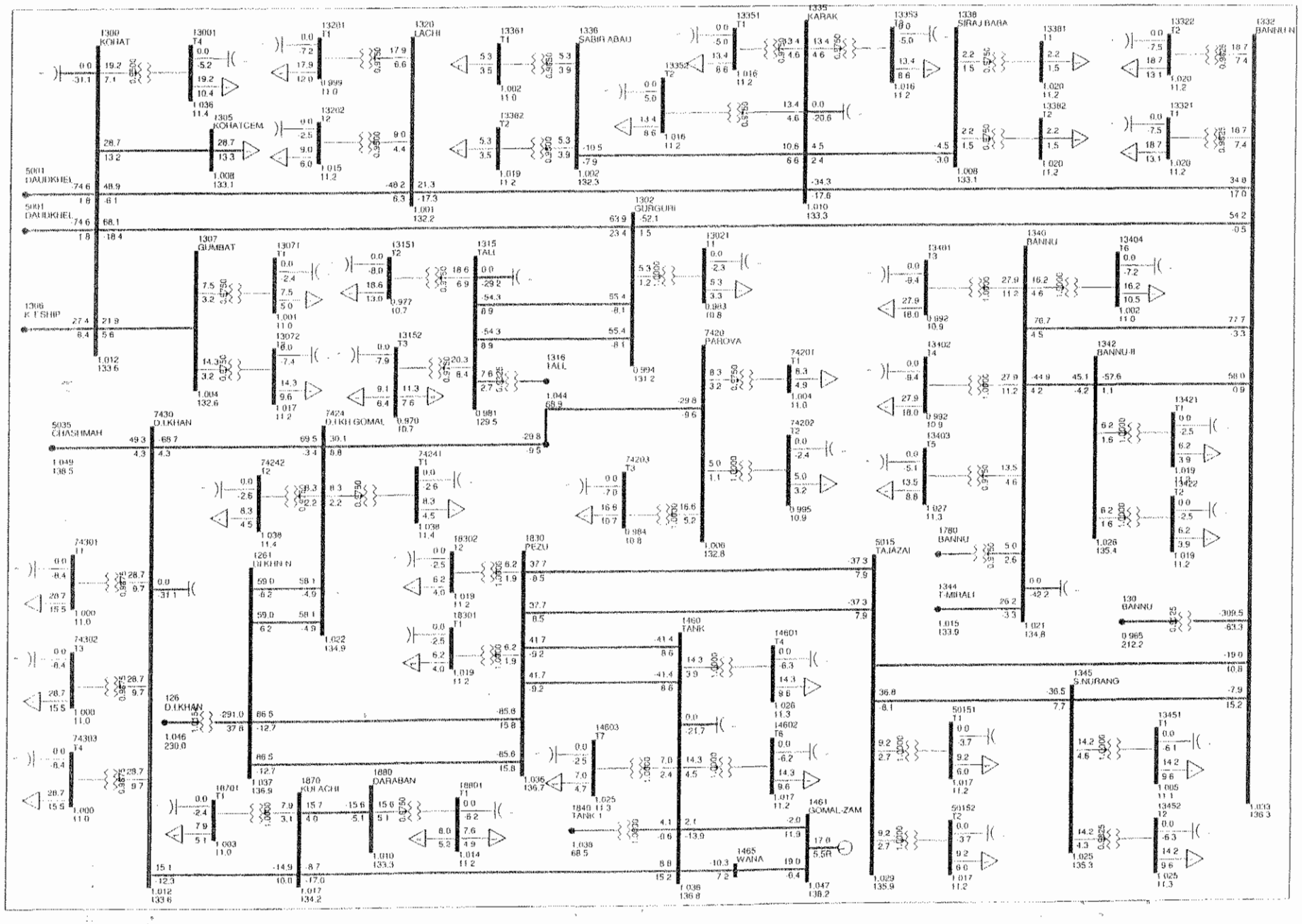

PESCO LOAD FLOW STUDY FOR (DIIP) FIVE YEAR PLAN
YEAR 2020: BASE CASE WITH REINFORCEMENT

Exhibit-1-2020-2.5

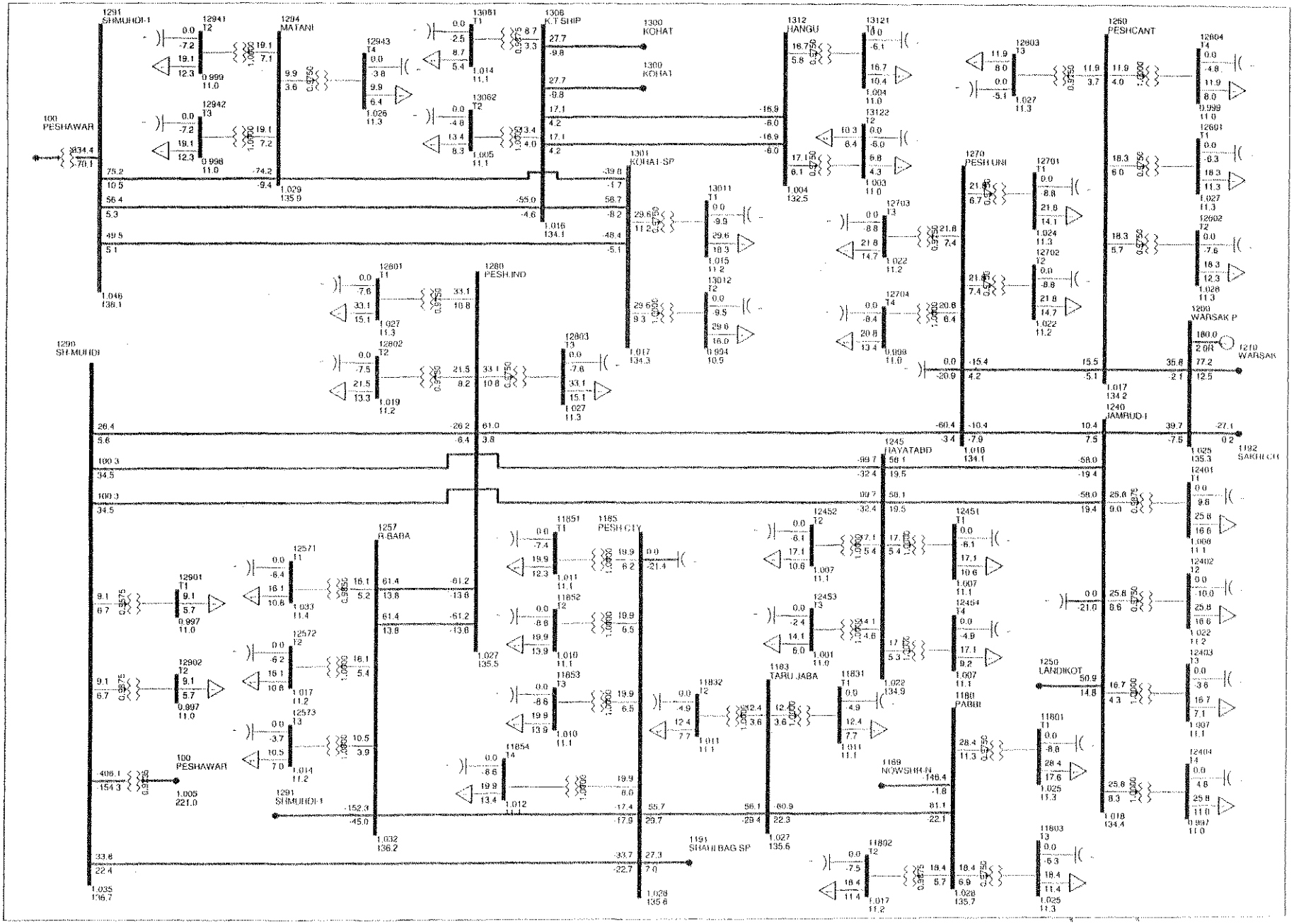

PESCO LOAD FLOW STUDY FOR (DIIP) FIVE YEAR PLAN
YEAR 2020: BASE CASE WITH REINFORCEMENT

Exhibit-1-2020-2.6

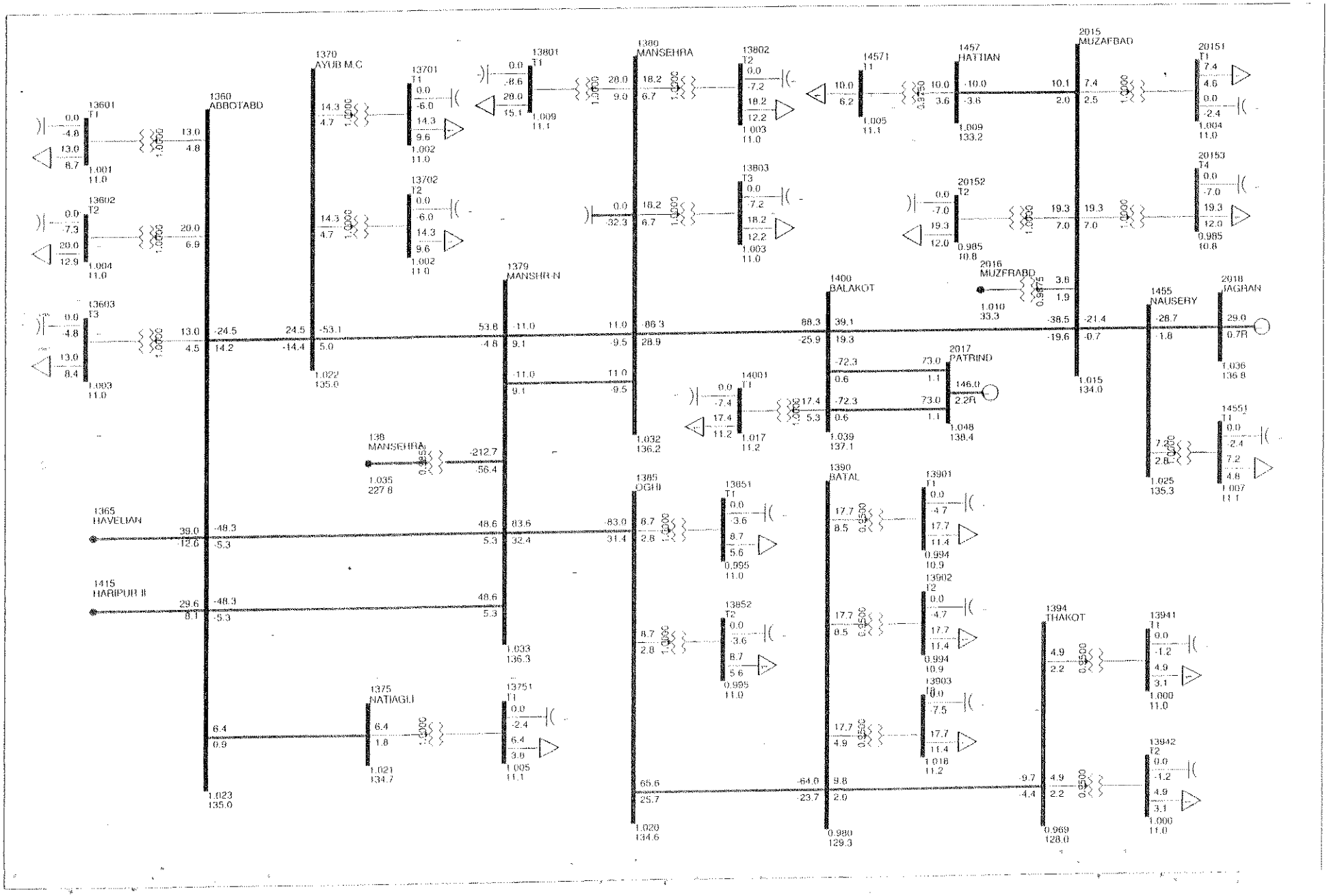

PESCO LOAD FLOW STUDY FOR (DIIP) FIVE YEAR PLAN
YEAR 2020: BASE CASE WITH REINFORCEMENT

Exhibit-1-2020-2.7

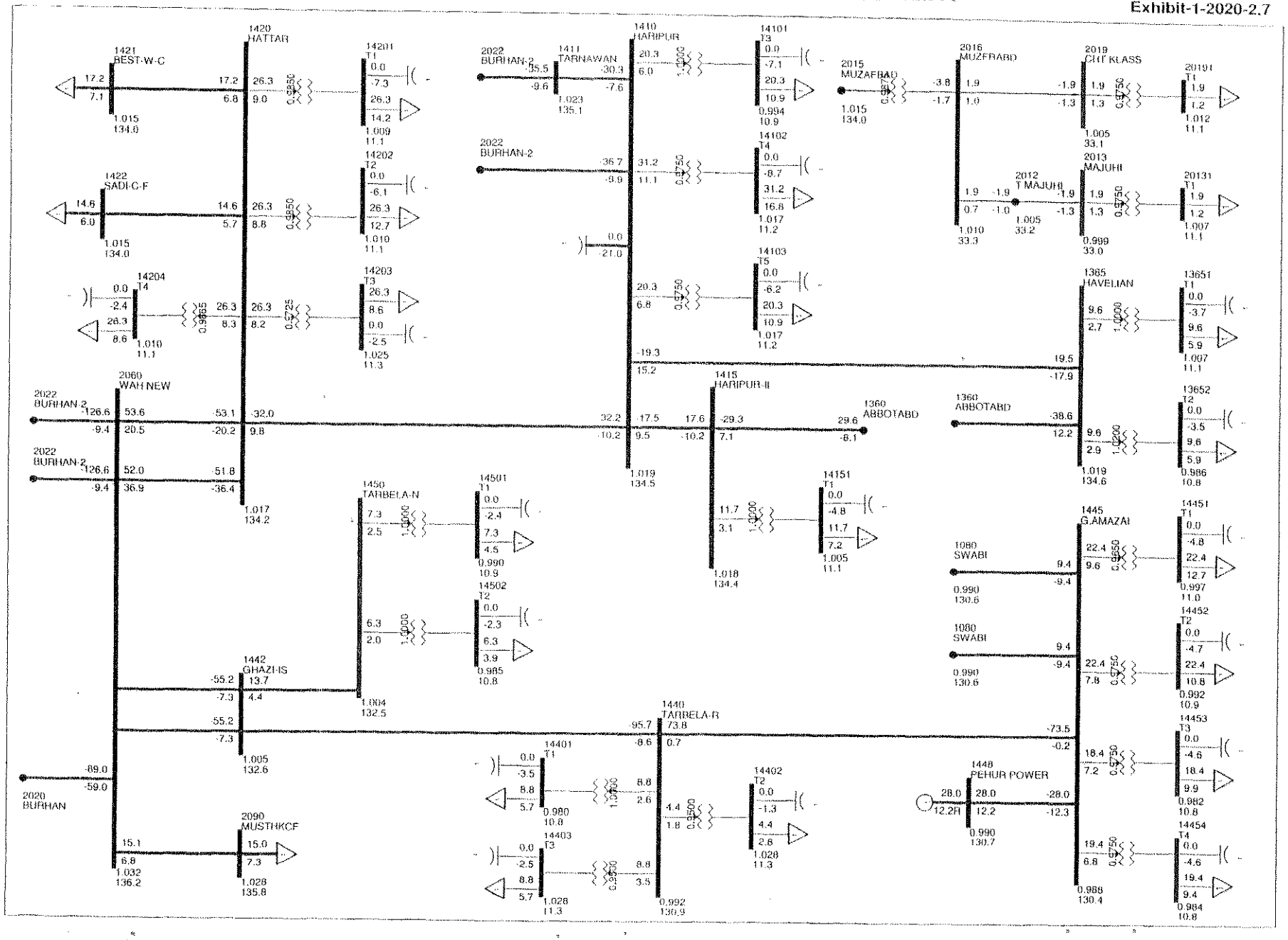

PESCO LOAD FLOW STUDY FOR (DIIP) FIVE YEAR PLAN
YEAR 2020: BASE CASE WITH REINFORCEMENT

Exhibit-1-2020-2.8

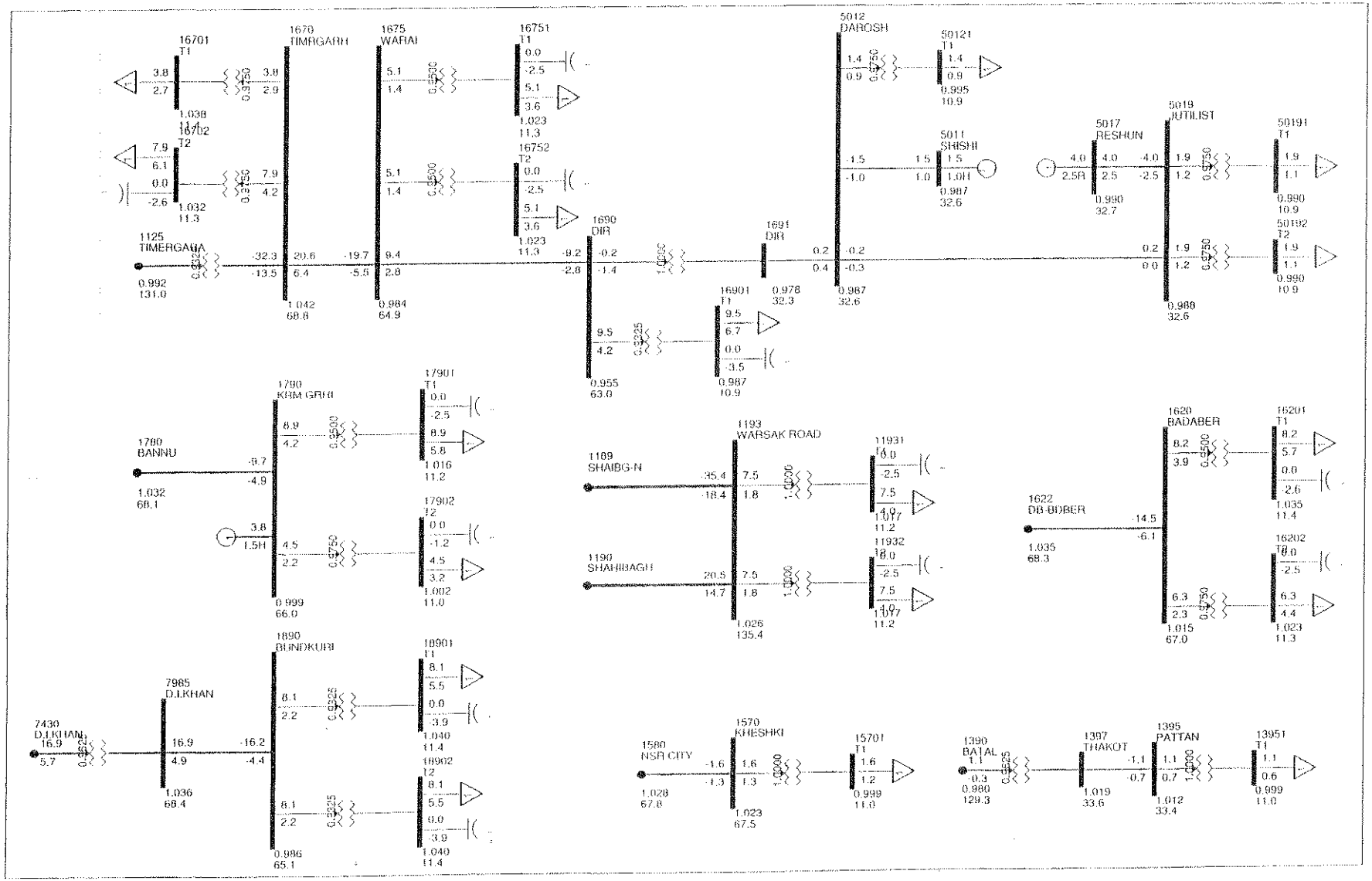

PESCO LOAD FLOW STUDY FOR (DIIP) FIVE YEAR PLAN
YEAR 2021: BASE CASE

Exhibit-1-2021-1.1

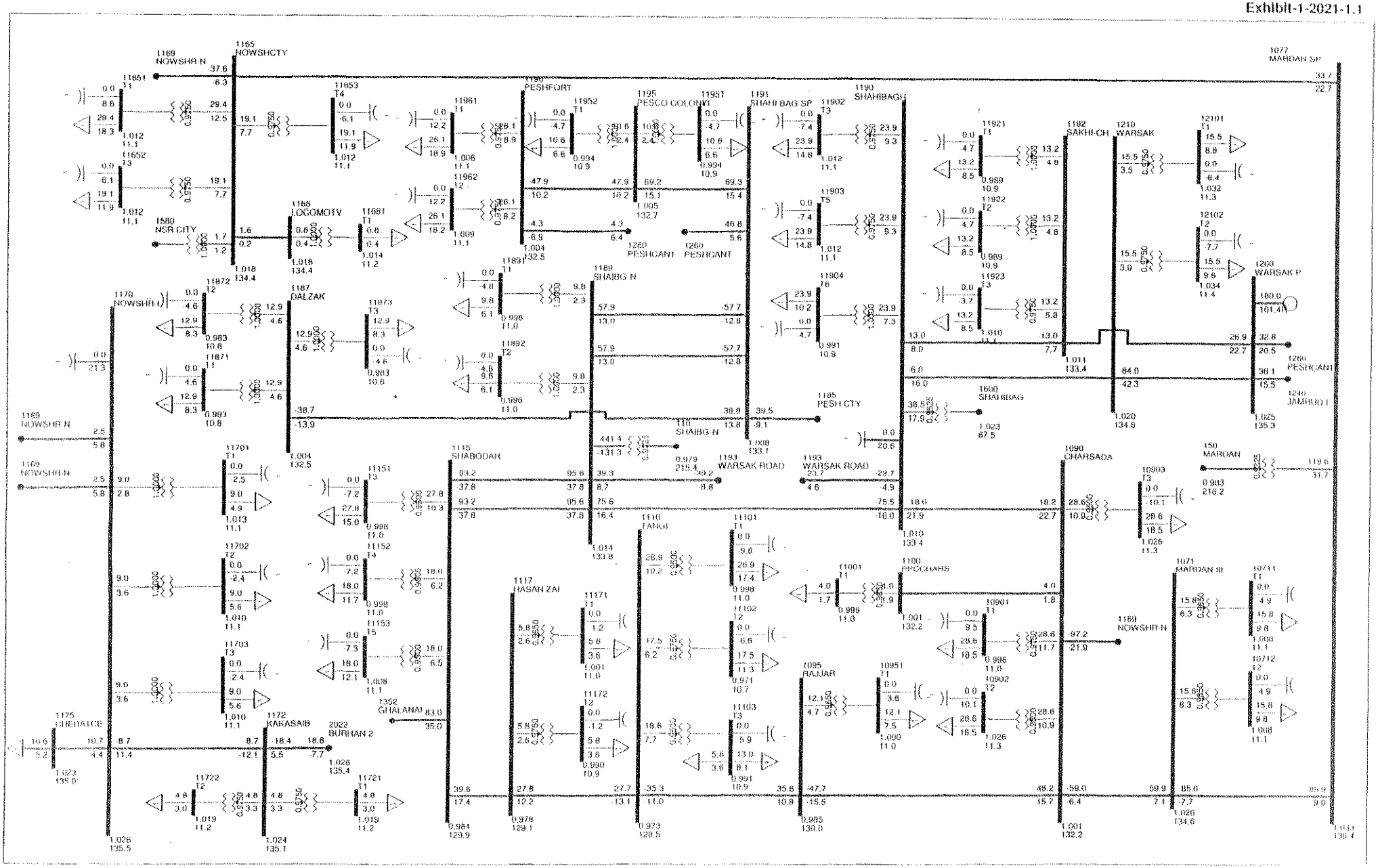

PESCO LOAD FLOW STUDY FOR (DIIP) FIVE YEAR PLAN
YEAR 2021: BASE CASE WITH REINFORCEMENT

Exhibit-1-2021-1.2

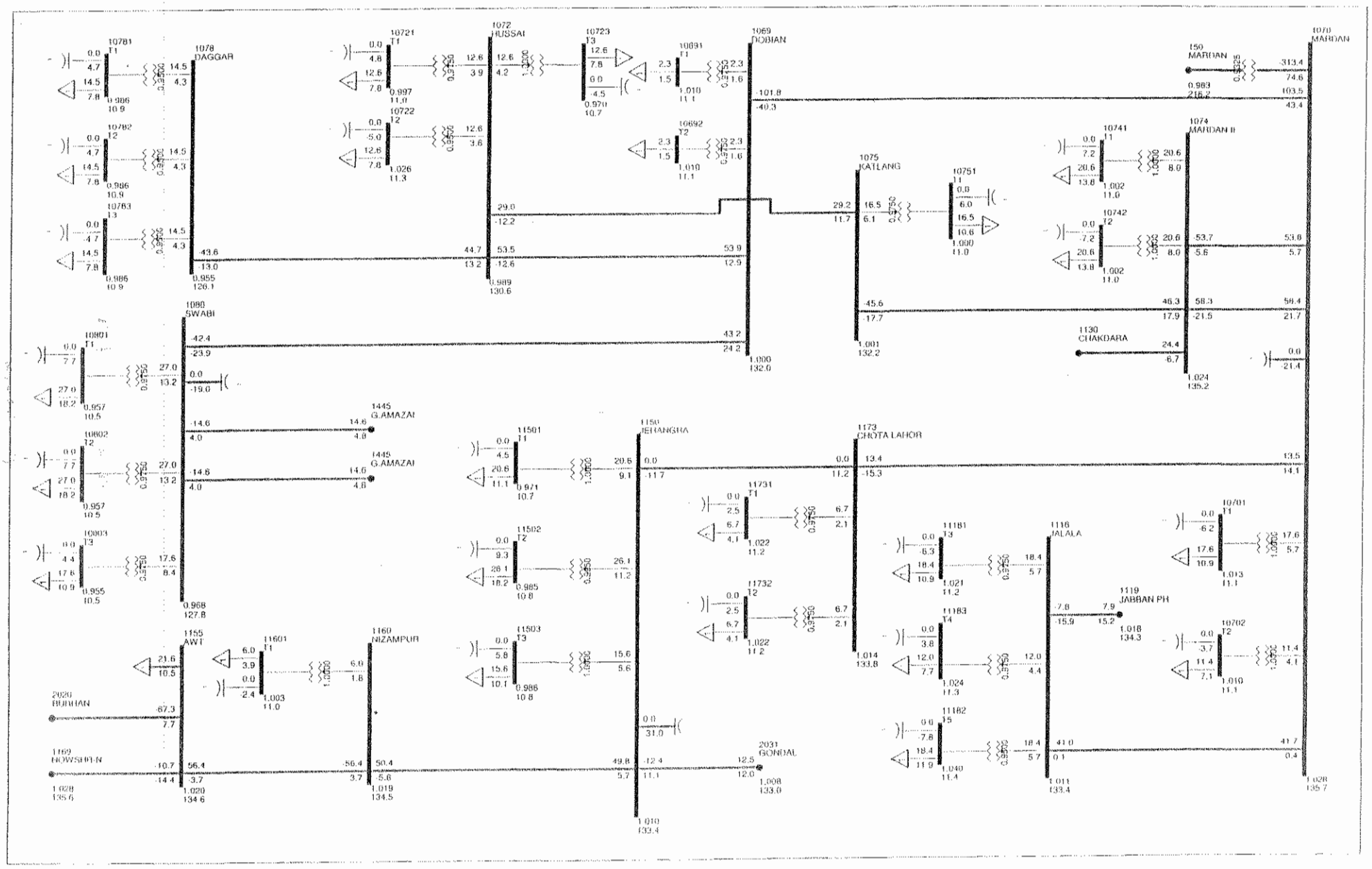

PESCO LOAD FLOW STUDY FOR (DIIP) FIVE YEAR PLAN
YEAR 2021: BASE CASE

Exhibit-1-2021-1.3

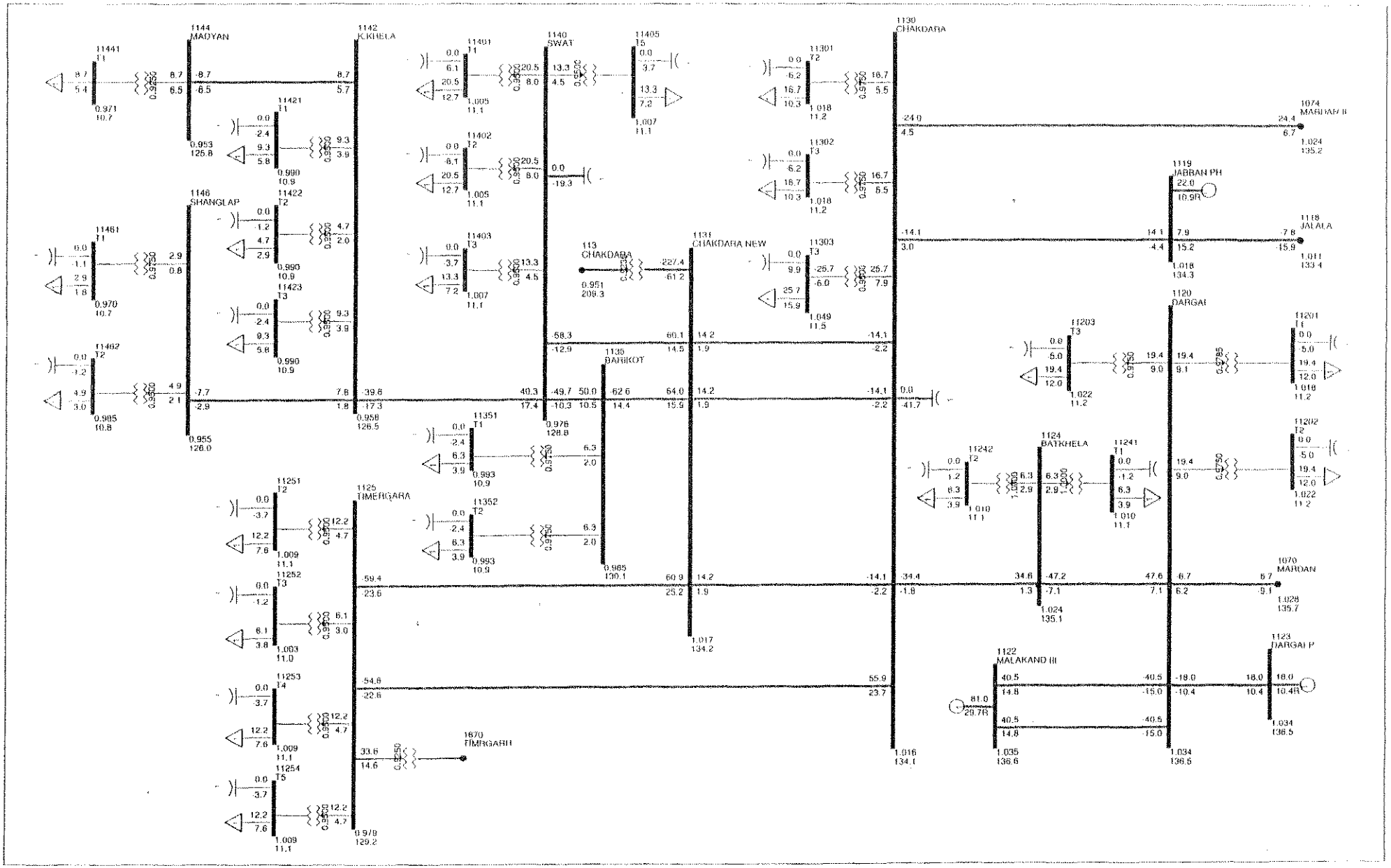

PESCO LOAD FLOW STUDY FOR (DIIP) FIVE YEAR PLAN
YEAR 2021: BASE CASE

Exhibit-1-2021-1.4

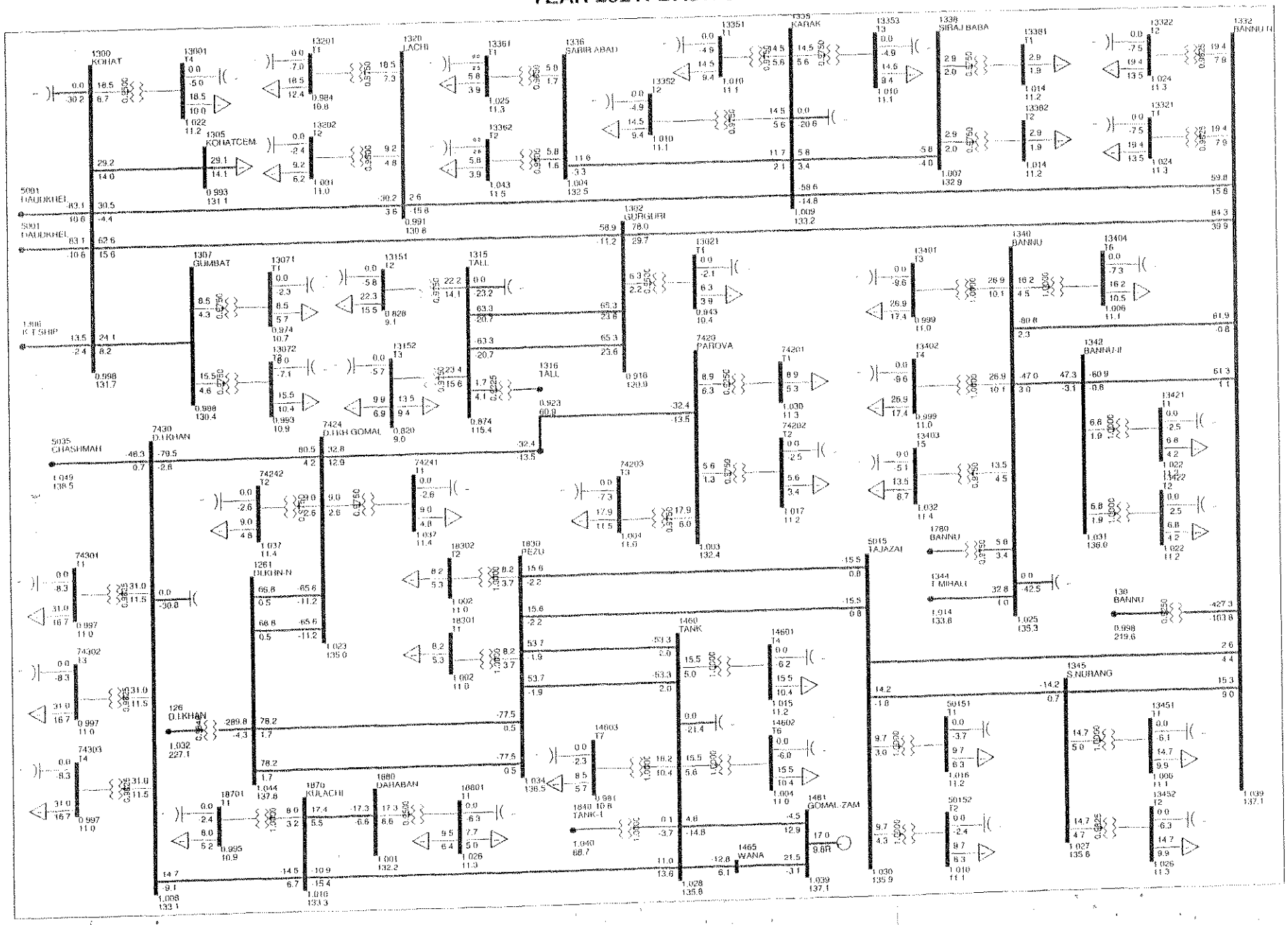

PESCO LOAD FLOW STUDY FOR (DIIP) FIVE YEAR PLAN
YEAR 2021: BASE CASE

Exhibit-1-2021-1.7

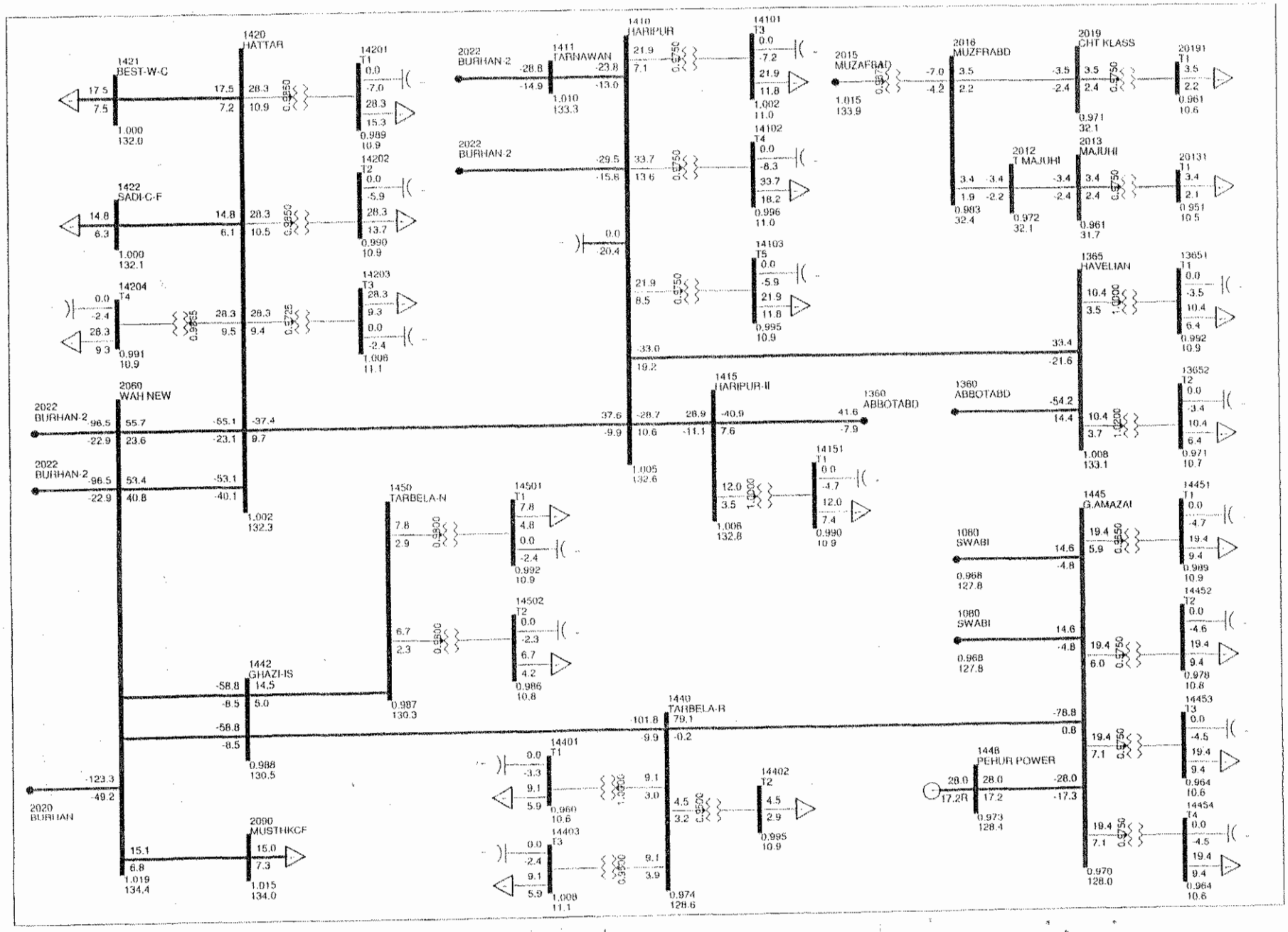

PESCO LOAD FLOW STUDY FOR (DIIP) FIVE YEAR PLAN
YEAR 2021: BASE CASE

Exhibit-1-2021-1.8

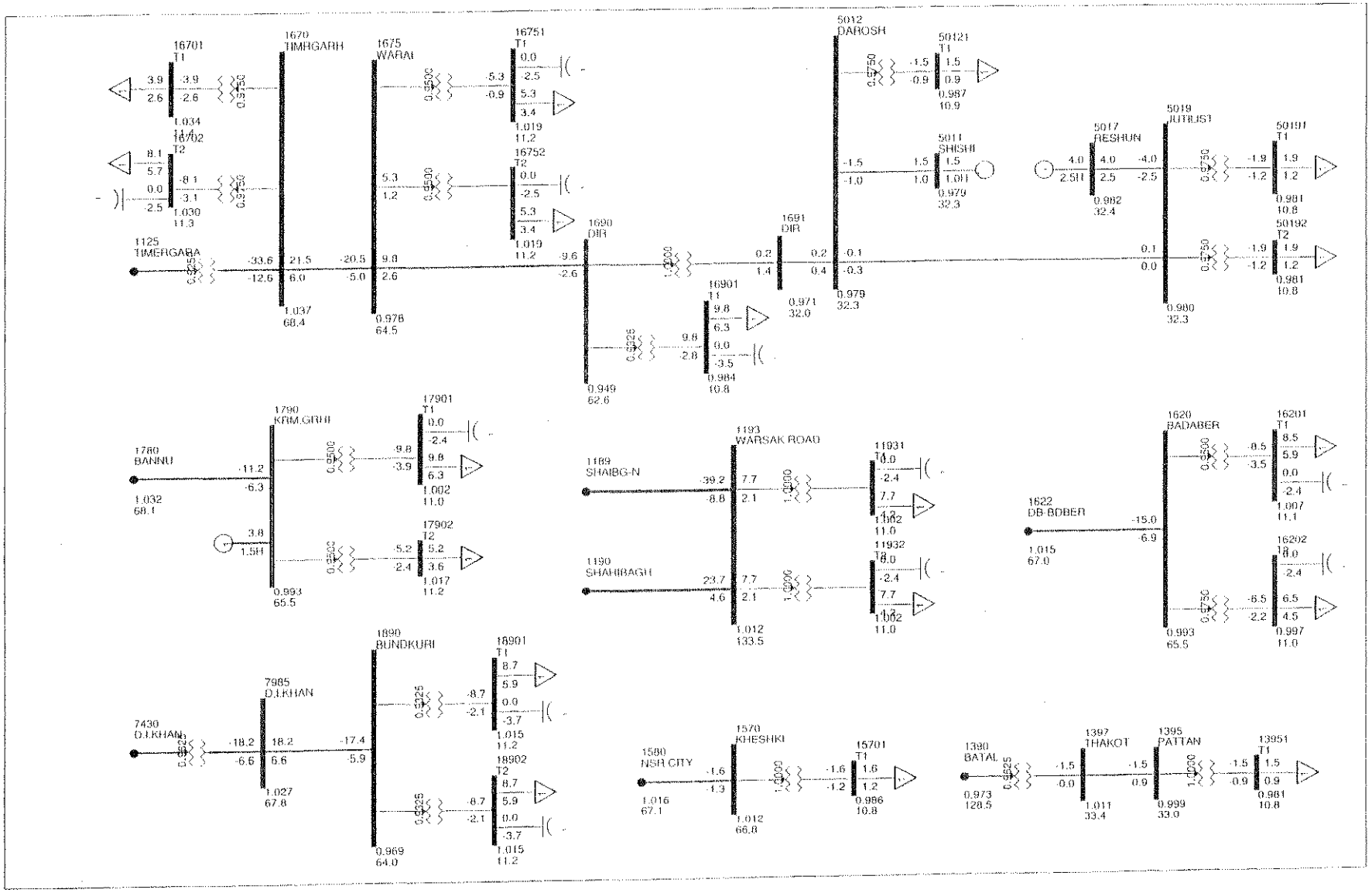

PESCO LOAD FLOW STUDY FOR (DIIP) FIVE YEAR PLAN
YEAR 2021: BASE CASE WITH REINFORCEMENT

Exhibit-1-2021-2.1

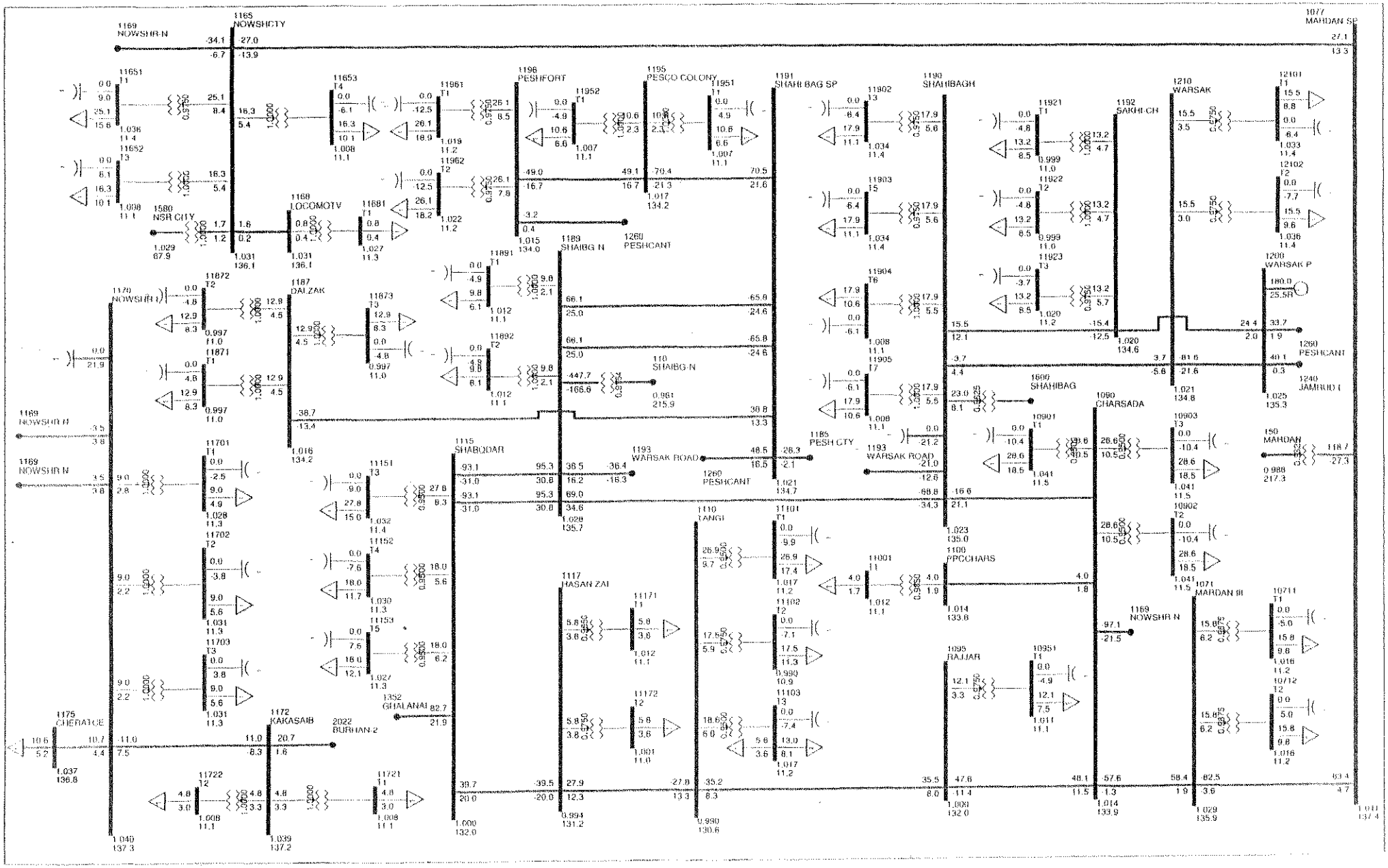

PESCO LOAD FLOW STUDY FOR (DIIP) FIVE YEAR PLAN
YEAR 2021: BASE CASE WITH REINFORCEMENT

Exhibit-1-2021-2.2

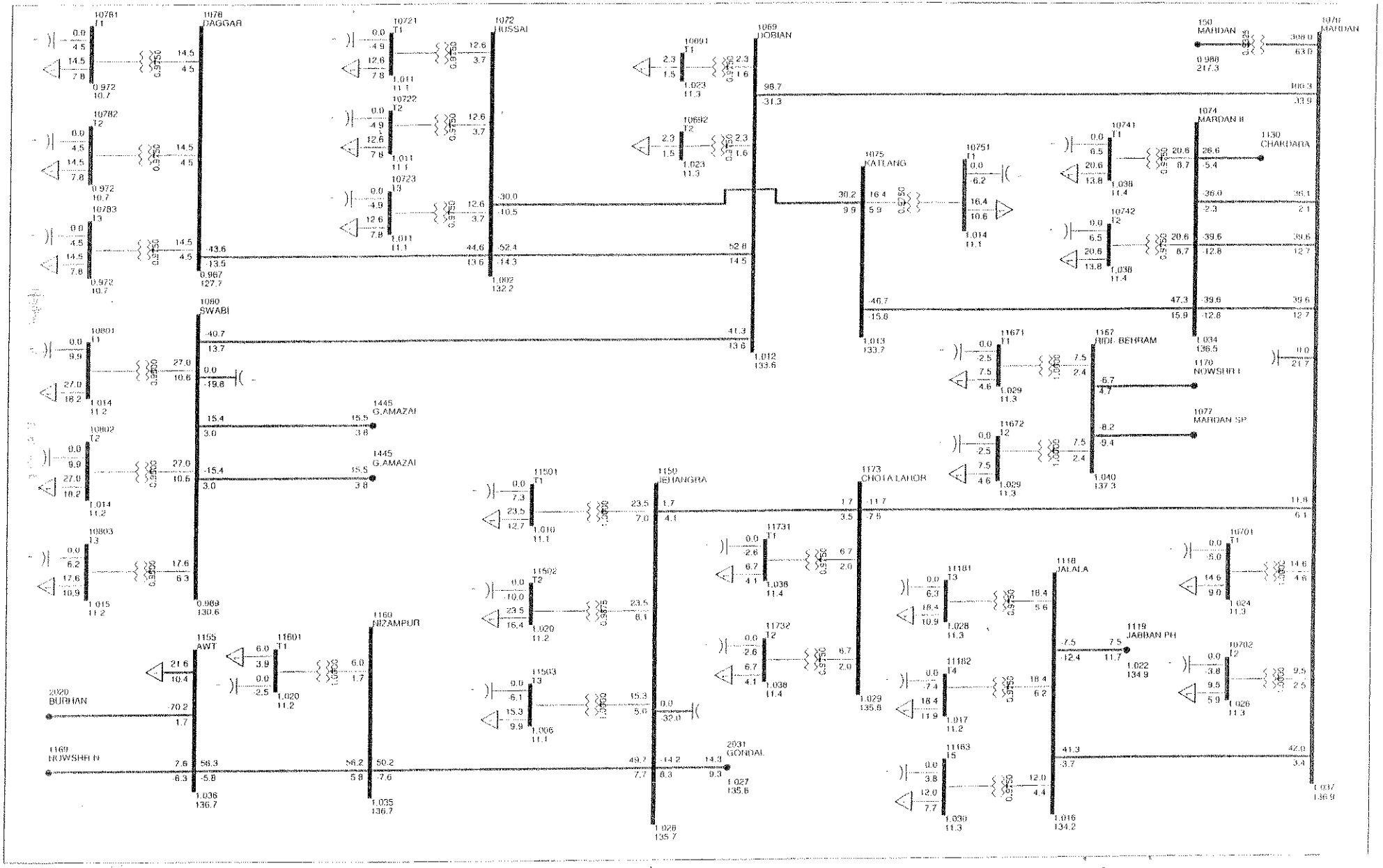

PESCO LOAD FLOW STUDY FOR (DIIP) FIVE YEAR PLAN
YEAR 2021: BASE CASE WITH REINFORCEMENT

Exhibit-1-2021-2.3

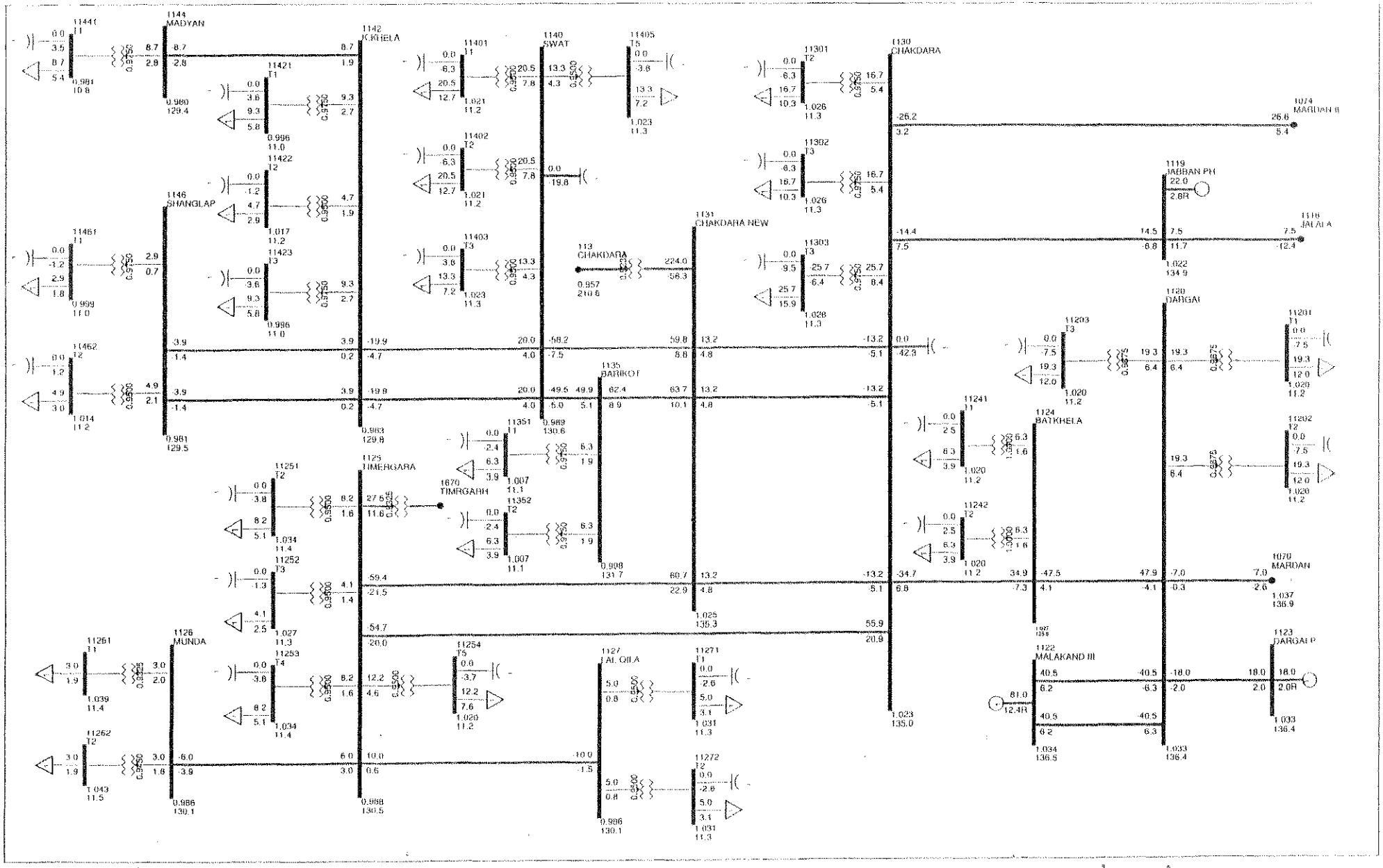

PESCO LOAD FLOW STUDY FOR (DIIP) FIVE YEAR PLAN
YEAR 2021: BASE CASE WITH REINFORCEMENT

Exhibit-1-2021-2.4

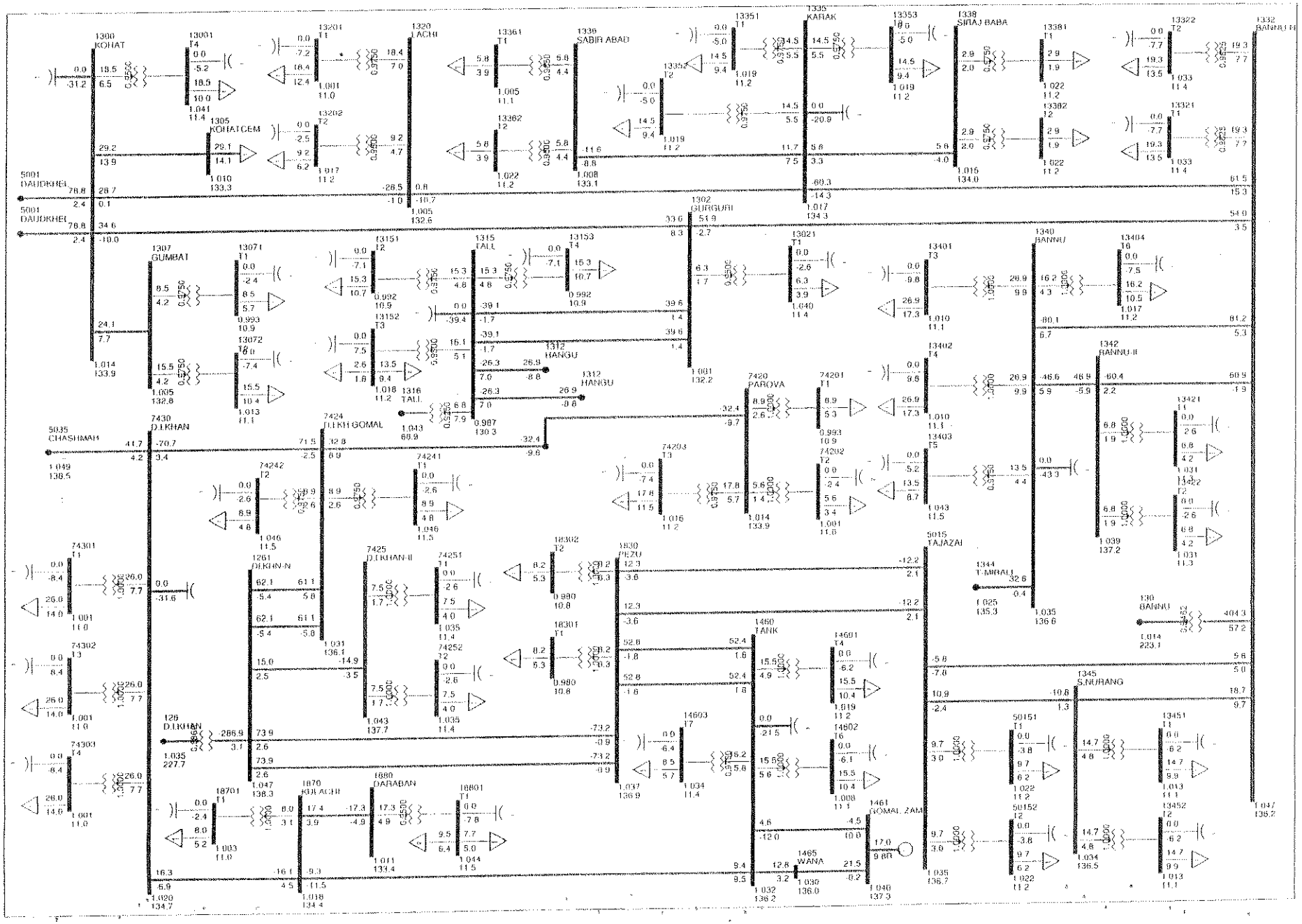

PESCO LOAD FLOW STUDY FOR (DIIP) FIVE YEAR PLAN
YEAR 2021: BASE CASE WITH REINFORCEMENT

Exhibit-1-2021-2.5

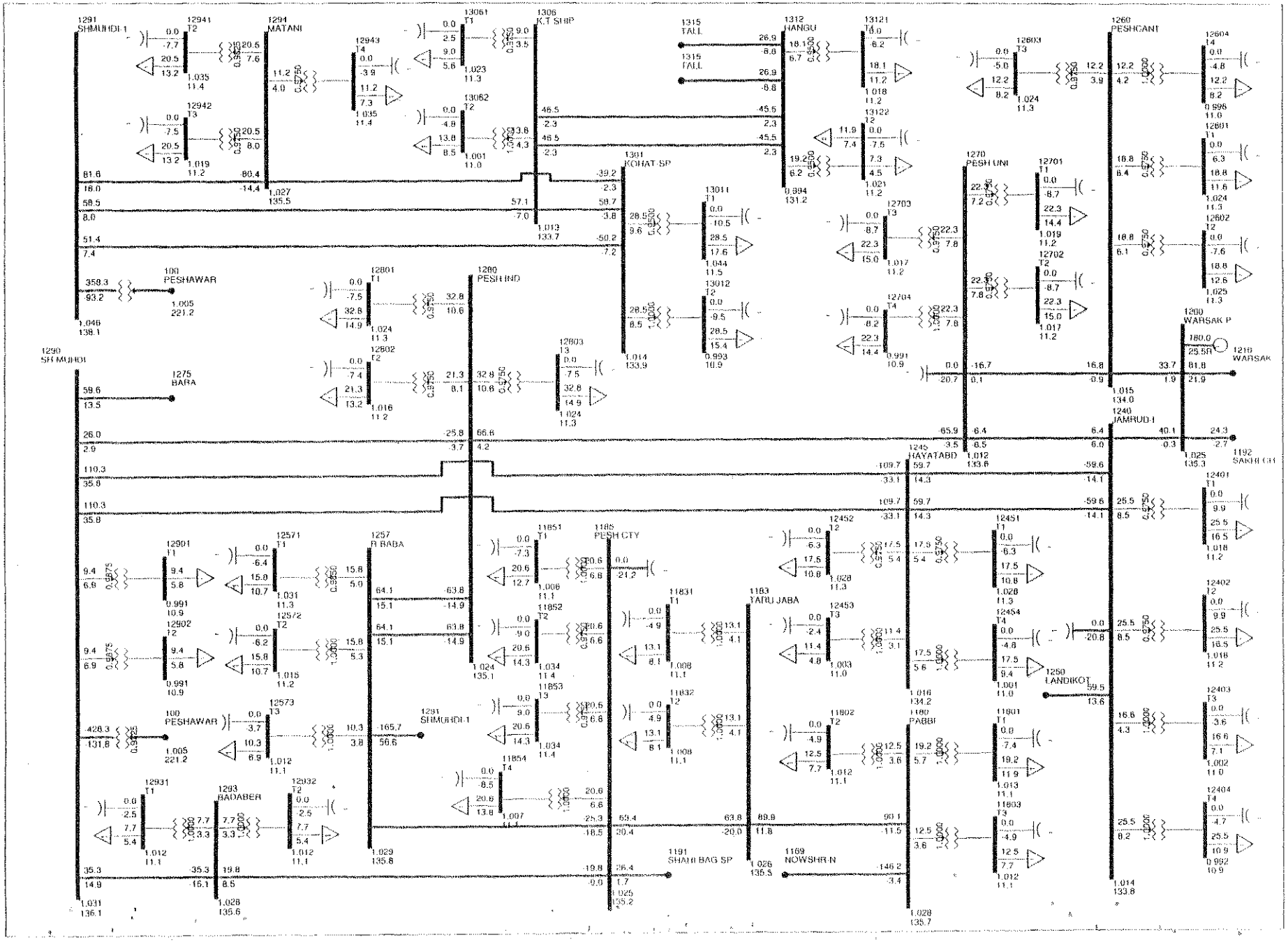

PESCO LOAD FLOW STUDY FOR (DIIP) FIVE YEAR PLAN
YEAR 2021: BASE CASE WITH REINFORCEMENT

Exhibit-1-2021-2.6

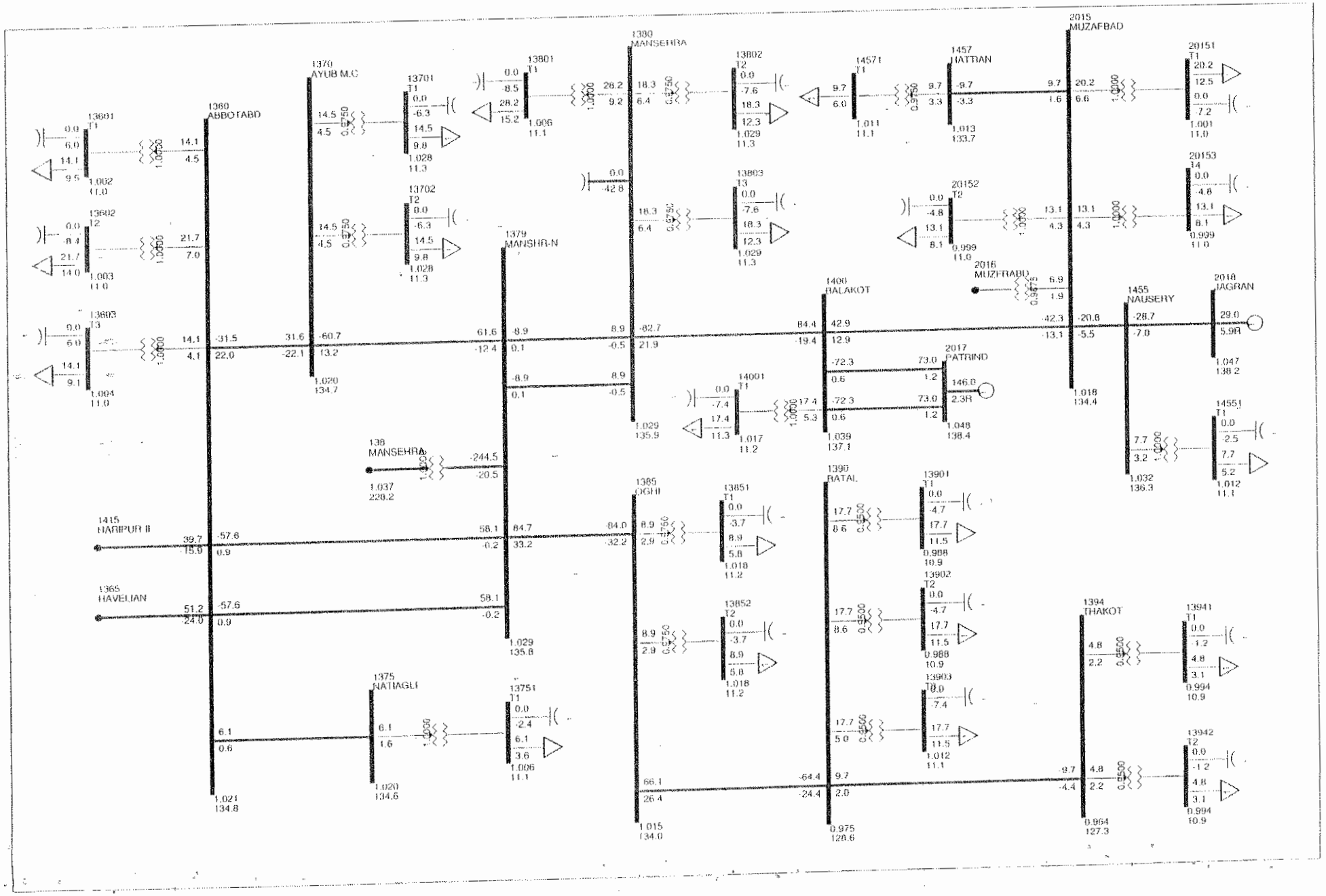

PESCO LOAD FLOW STUDY FOR (DIIP) FIVE YEAR PLAN
YEAR 2021: BASE CASE WITH REINFORCEMENT

Exhibit-1-2021-2.7

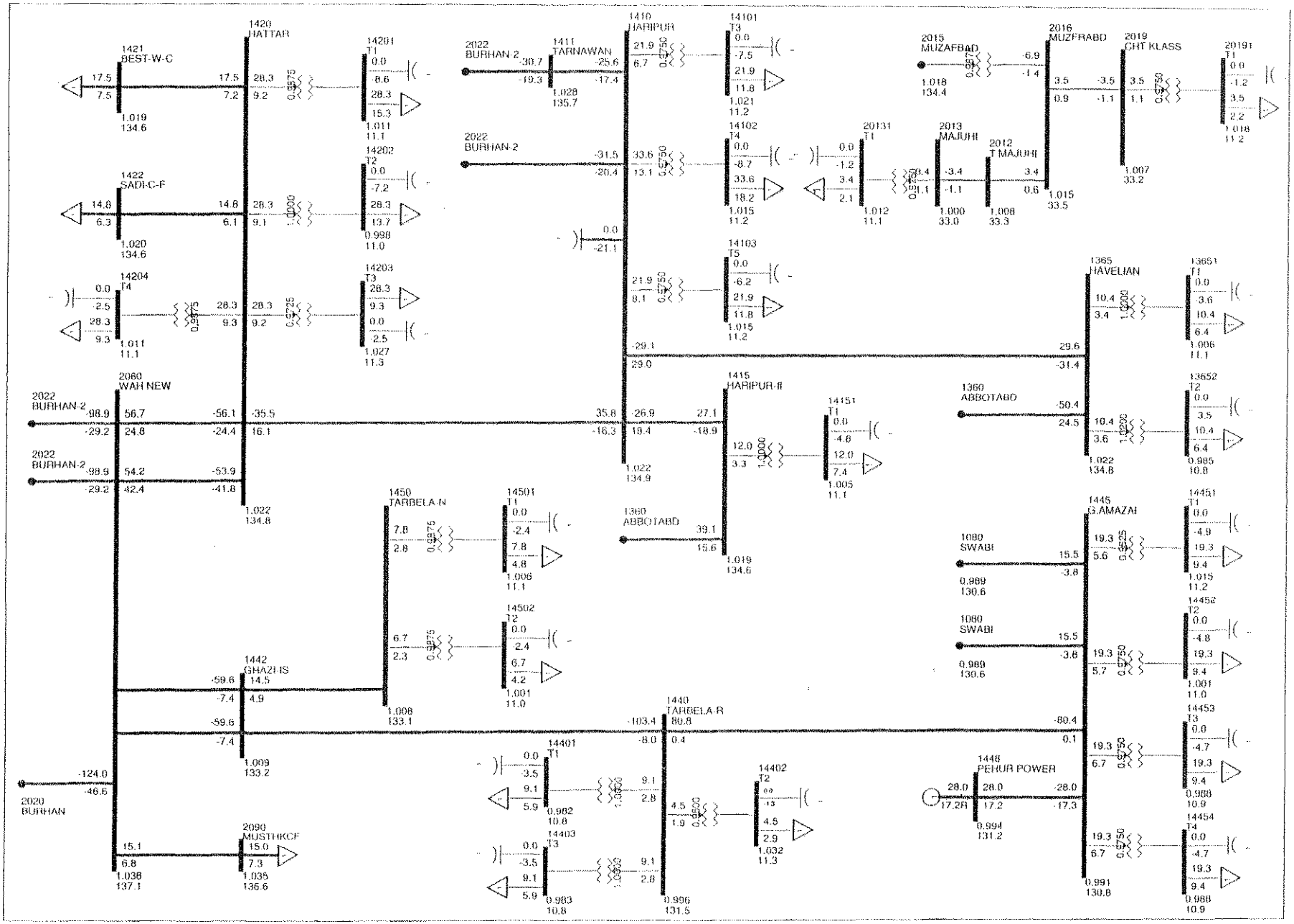

PESCO LOAD FLOW STUDY FOR (DIIP) FIVE YEAR PLAN
YEAR 2021: BASE CASE WITH REINFORCEMENT

Exhibit-1-2021-2.8

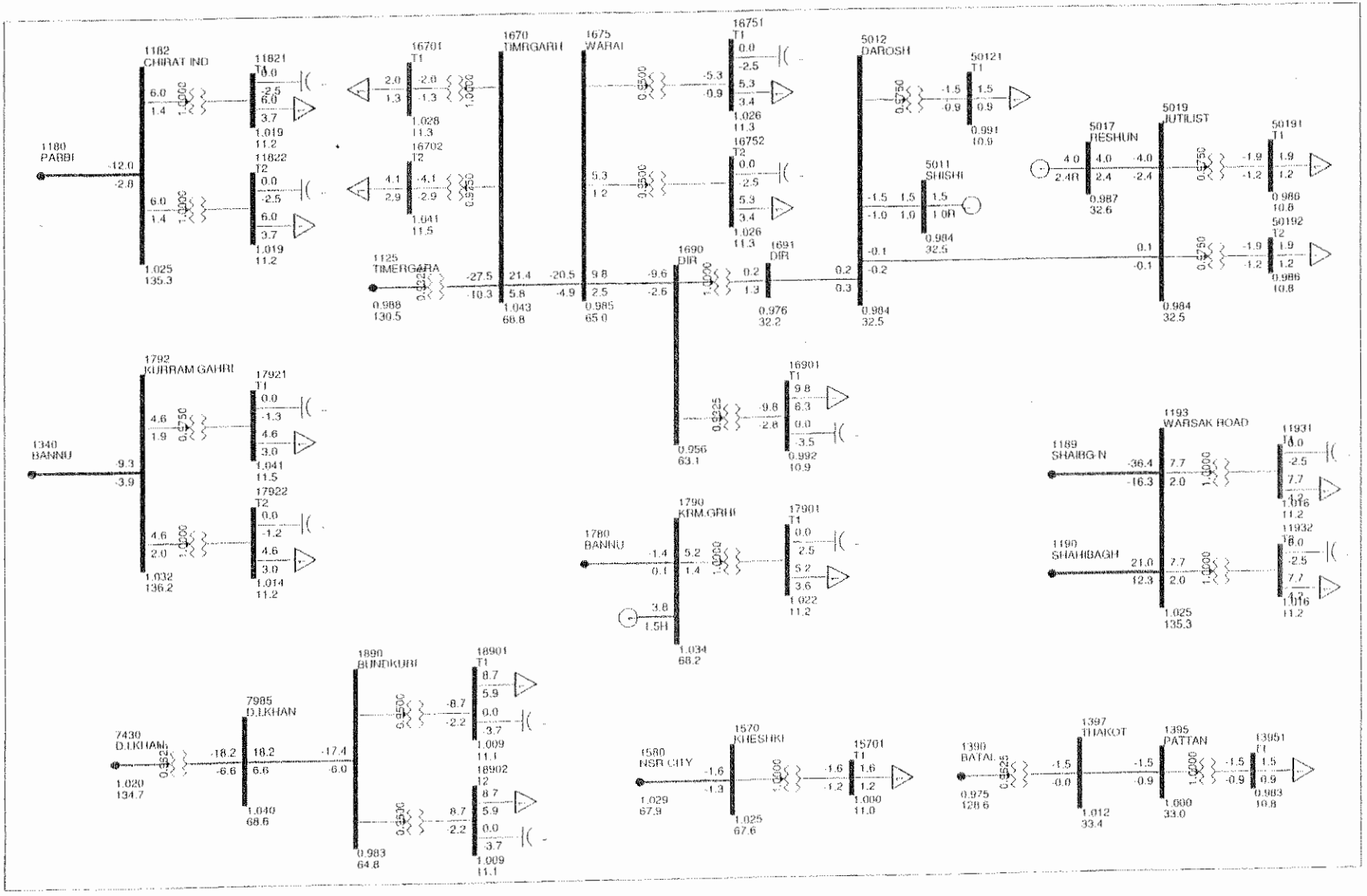

PESCO LOAD FLOW STUDY FOR (DIIP) FIVE YEAR PLAN
YEAR 2022: BASE CASE

Exhibit-1-2022-1.1

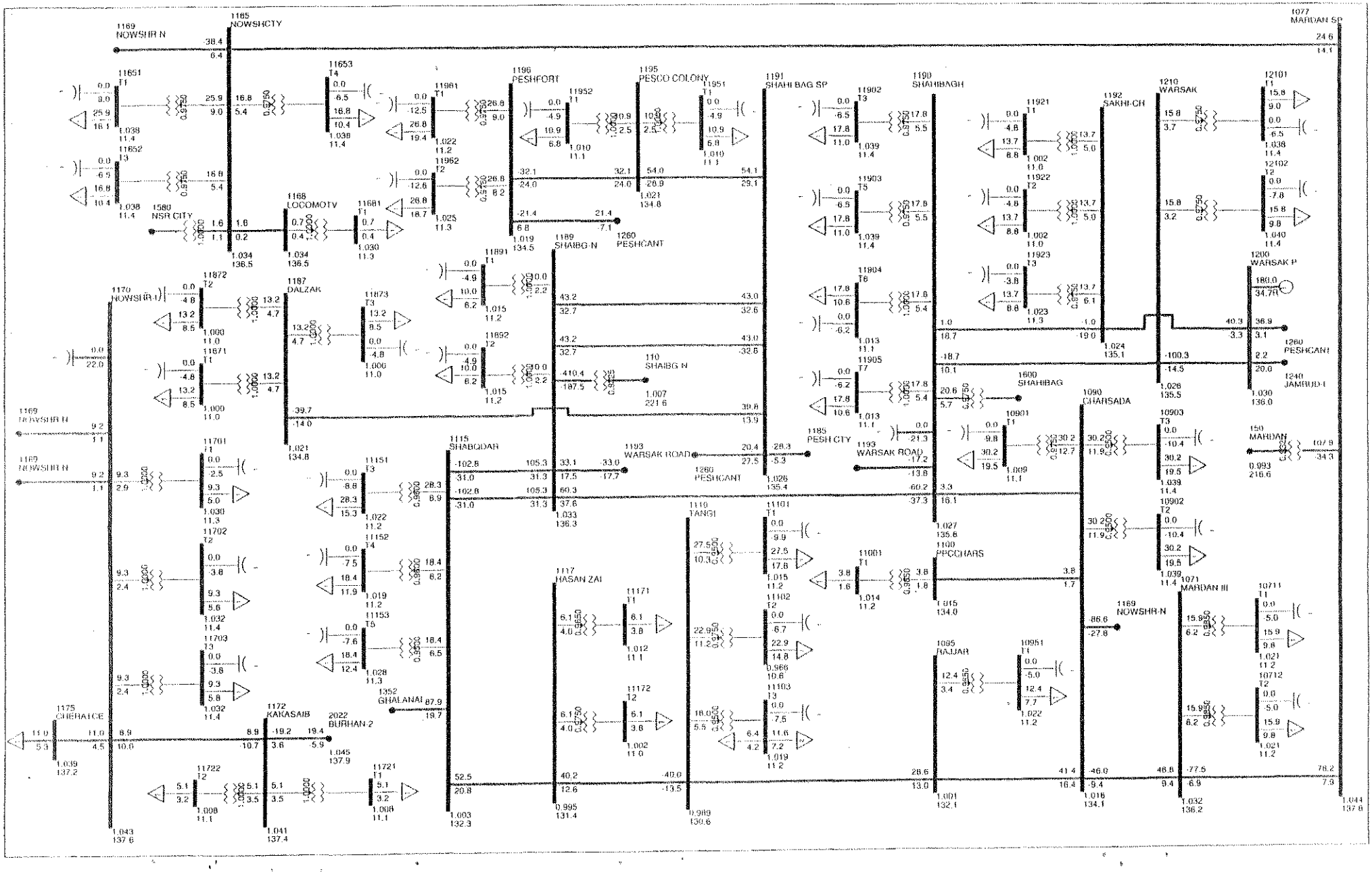

PESCO LOAD FLOW STUDY FOR (DIIP) FIVE YEAR PLAN
YEAR 2022: BASE CASE

Exhibit-1-2022-1.2

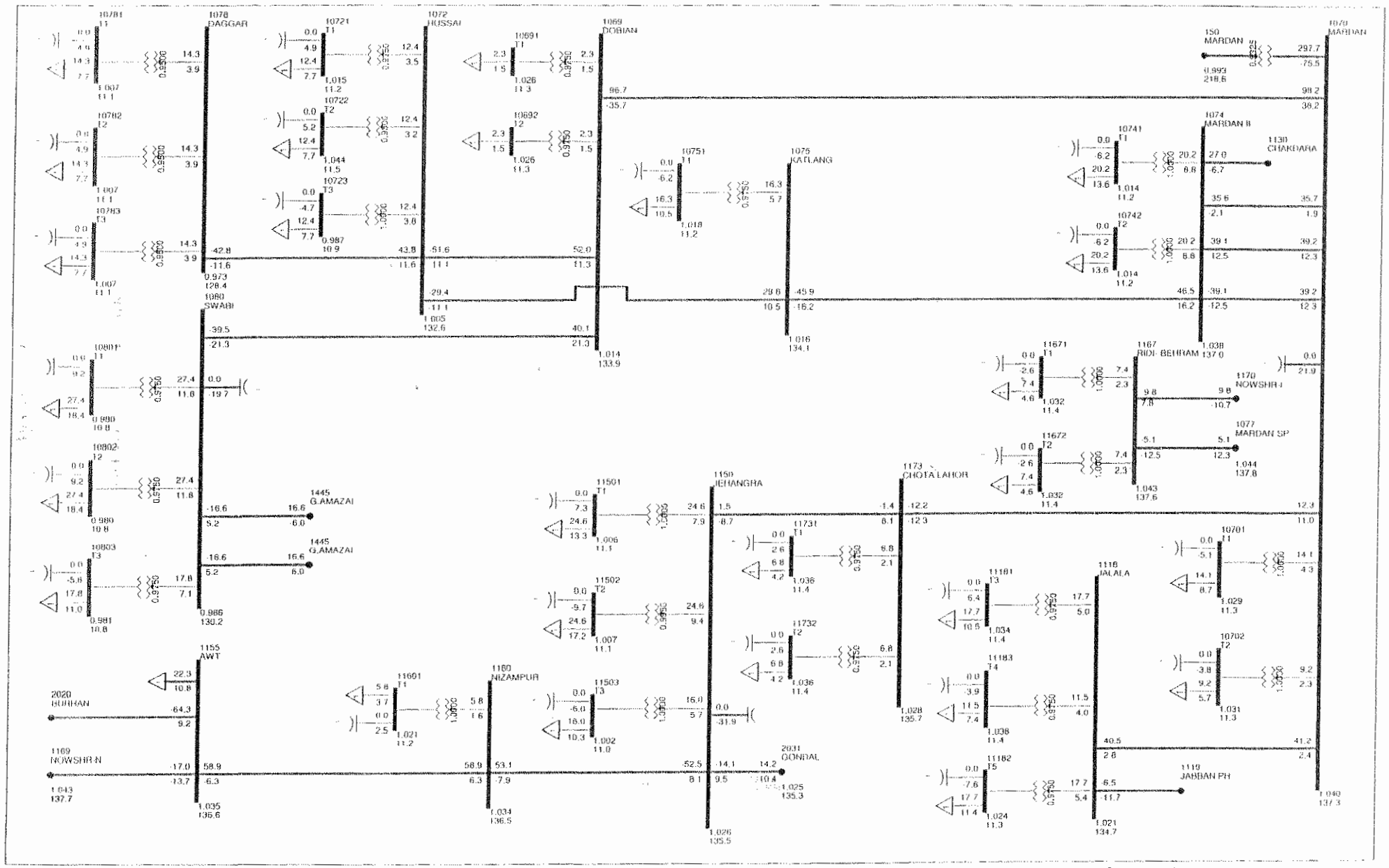

PESCO LOAD FLOW STUDY FOR (DIIP) FIVE YEAR PLAN
YEAR 2022: BASE CASE

Exhibit-1-2022-1.3

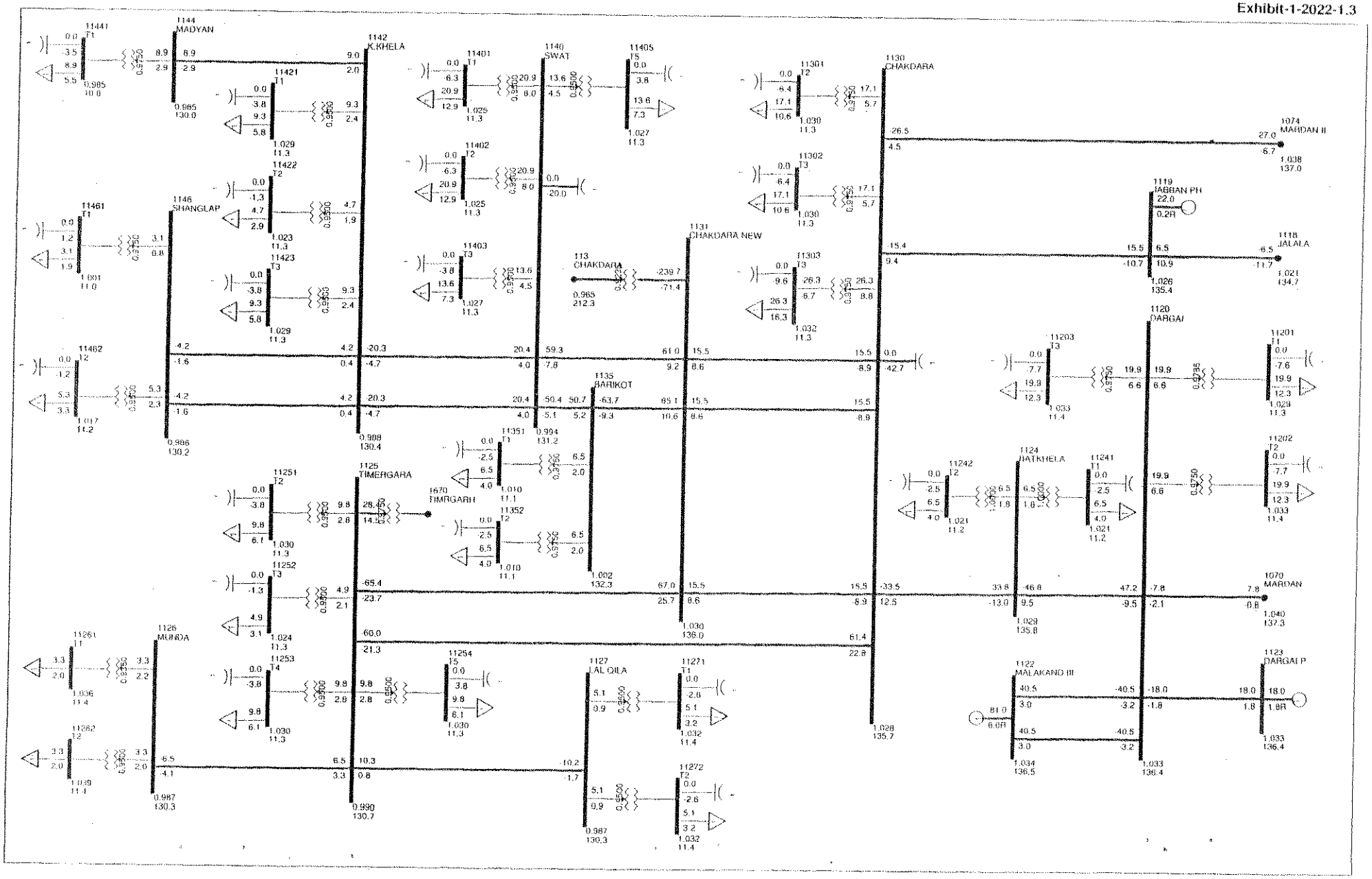

PESCO LOAD FLOW STUDY FOR (DIIP) FIVE YEAR PLAN
YEAR 2022: BASE CASE

Exhibit-1-2022-1.5

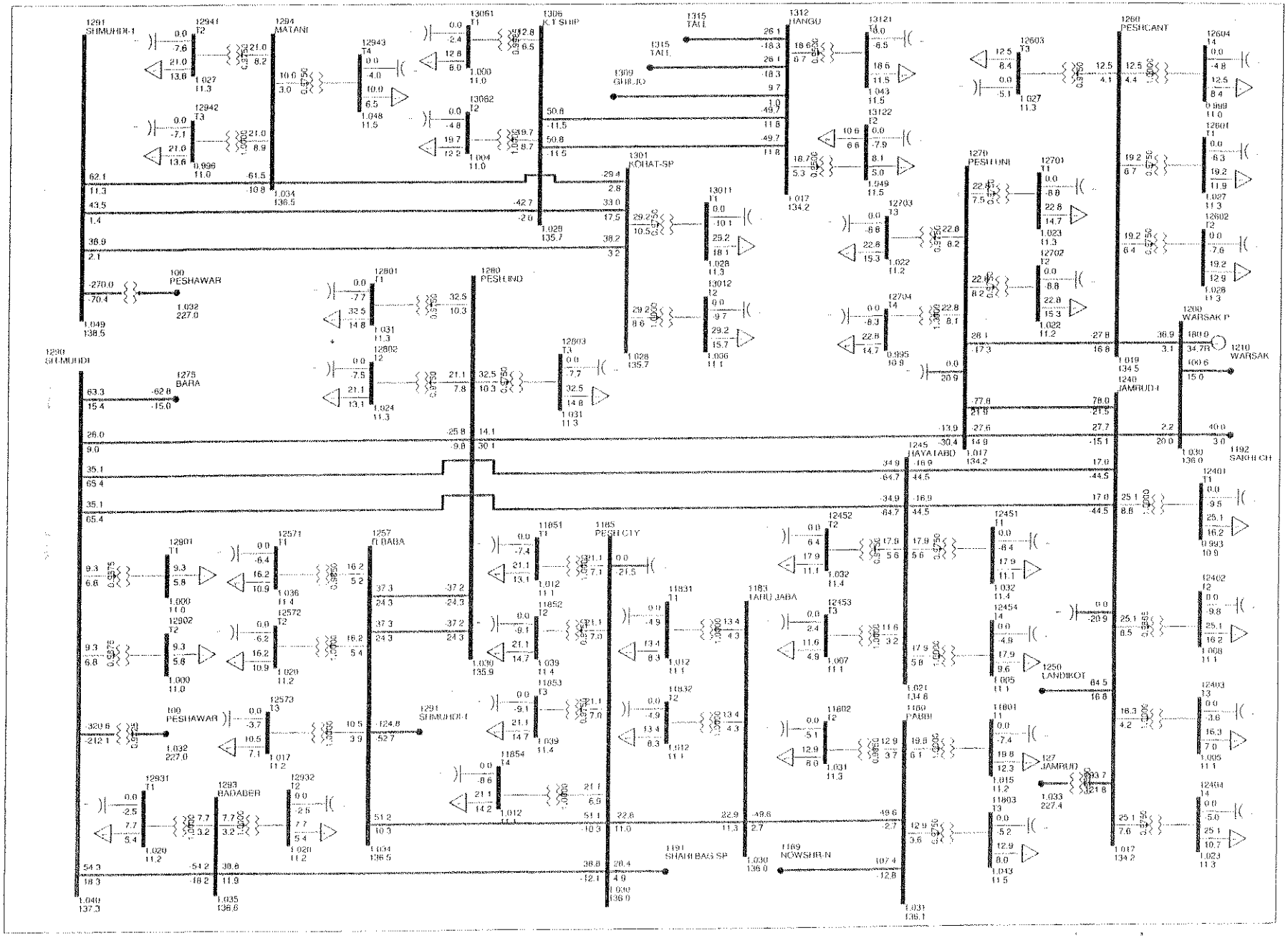

PESCO LOAD FLOW STUDY FOR (DIIP) FIVE YEAR PLAN
YEAR 2022: BASE CASE

Exhibit-1-2021-1.6

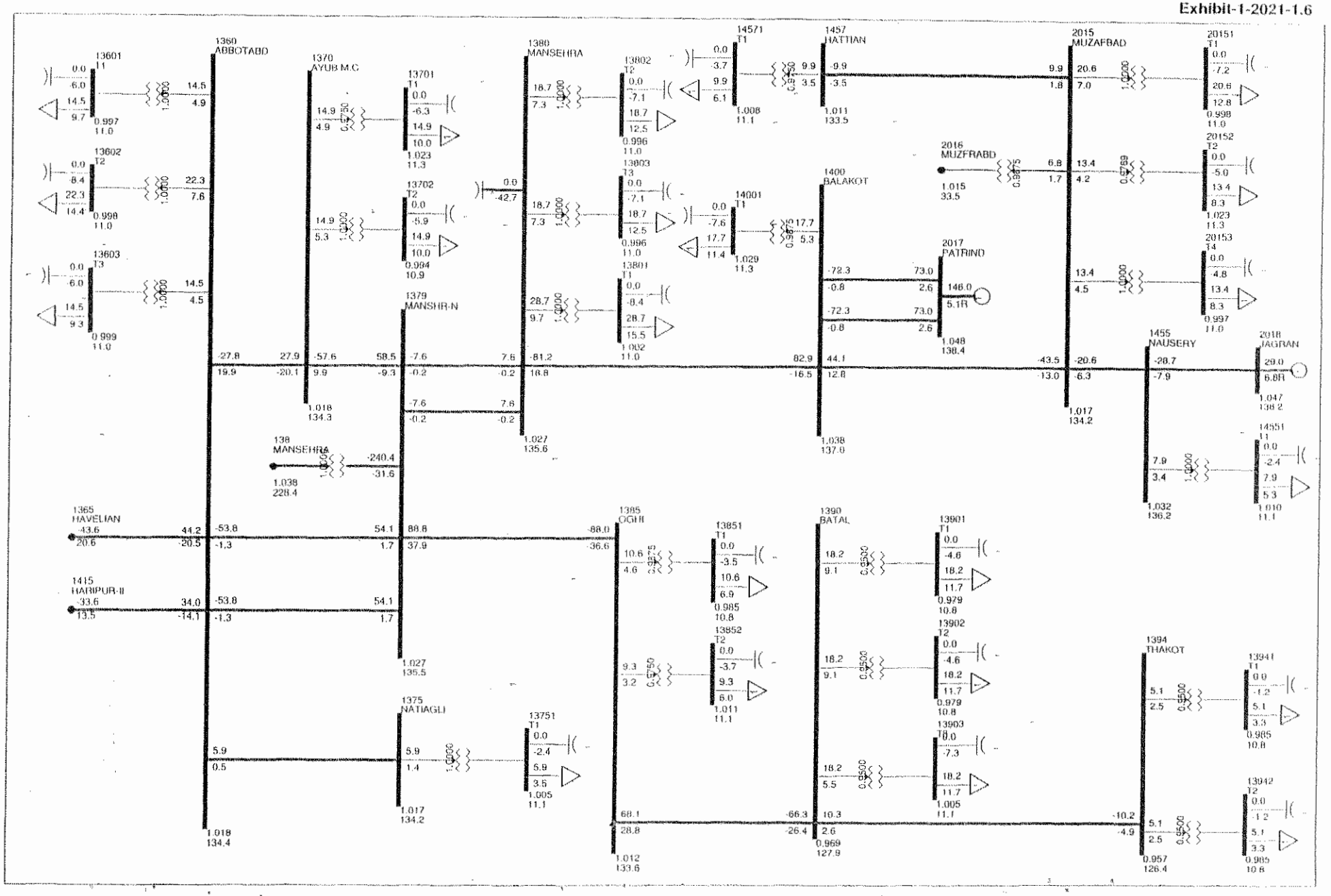

PESCO LOAD FLOW STUDY FOR (DIIP) FIVE YEAR PLAN
YEAR 2022: BASE CASE

Exhibit-1-2022-1.7

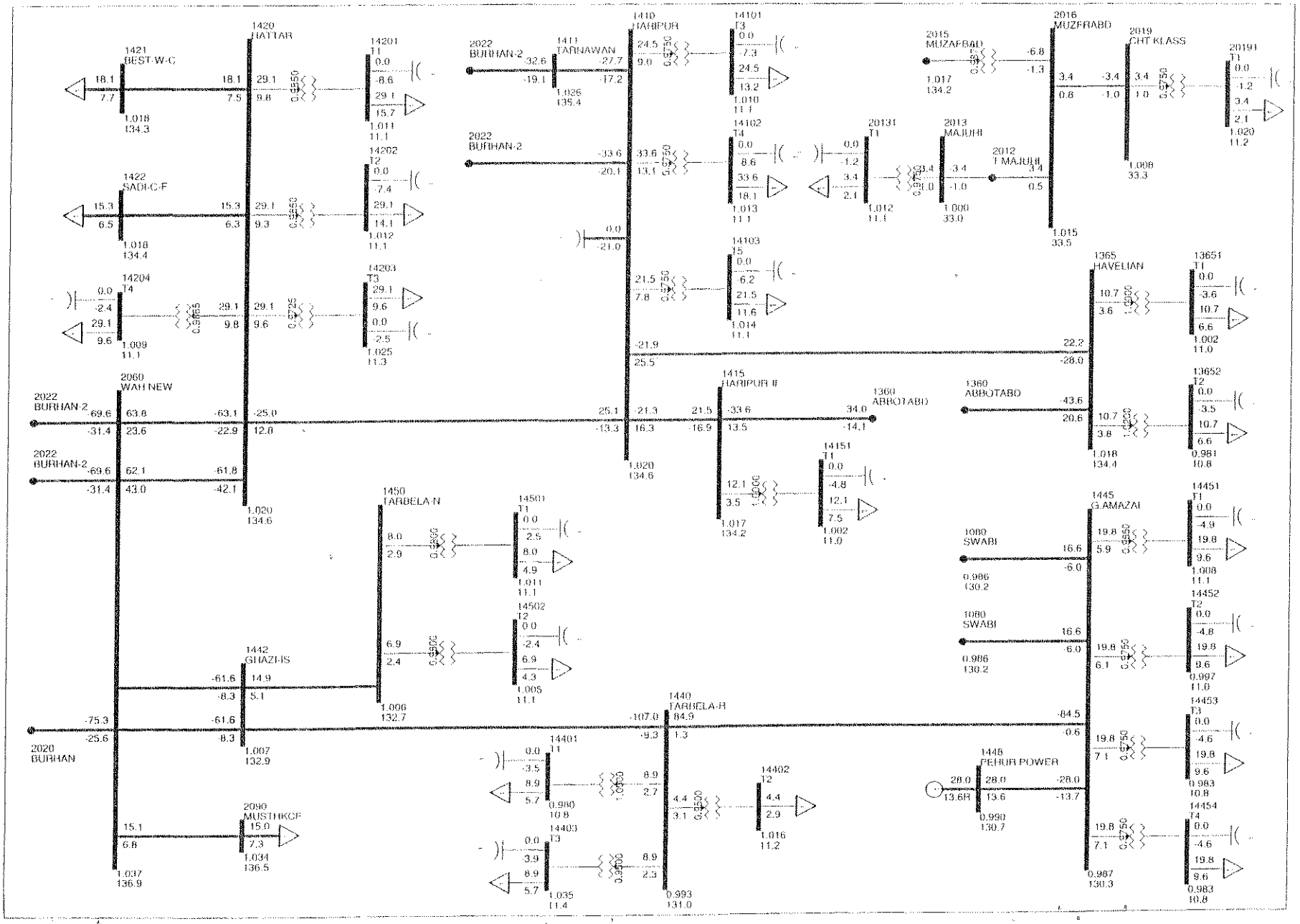

PESCO LOAD FLOW STUDY FOR (DIIP) FIVE YEAR PLAN
YEAR 2022: BASE CASE

Exhibit-1-2022-1.8

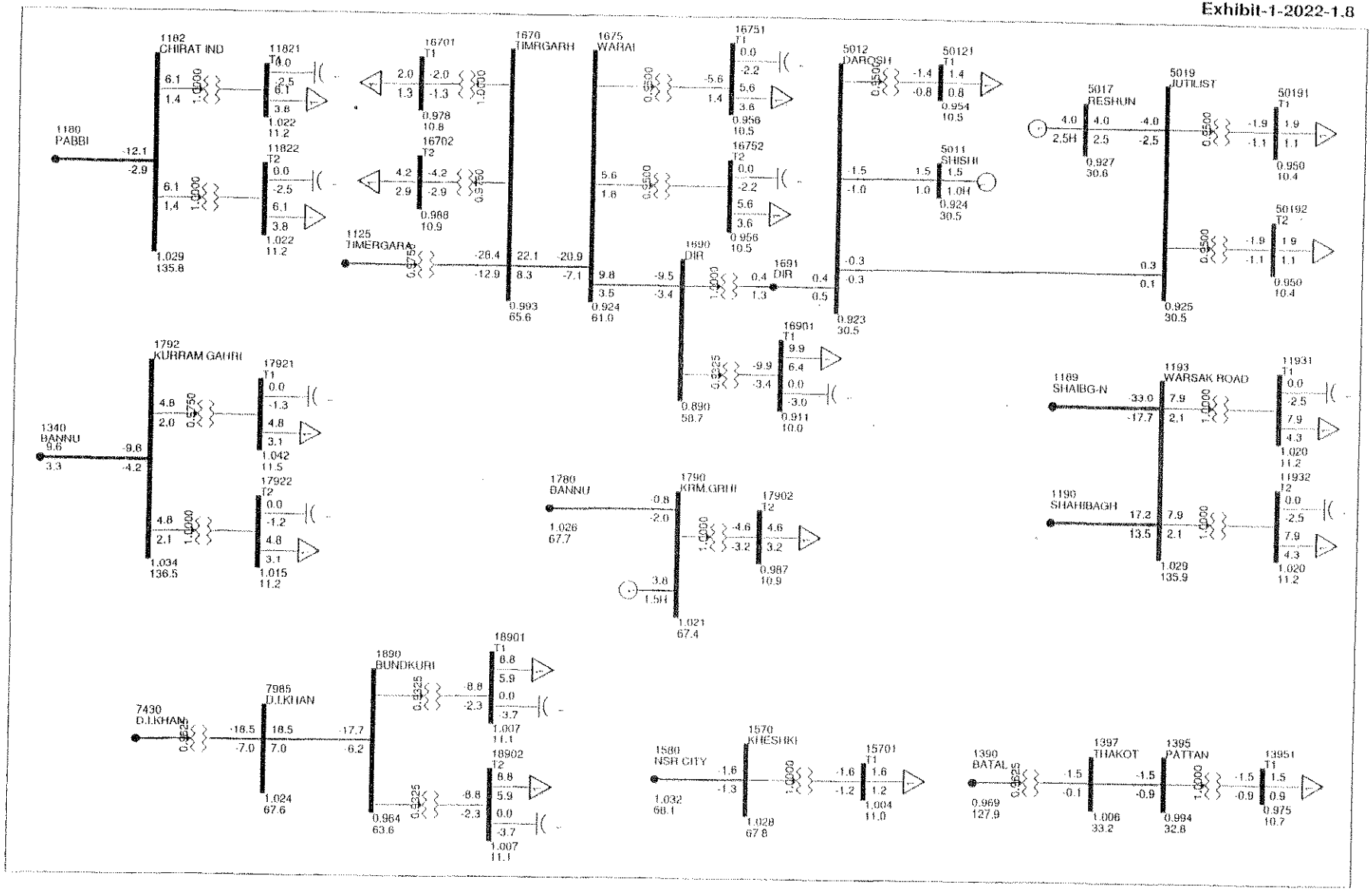

PESCO LOAD FLOW STUDY FOR (DIIP) FIVE YEAR PLAN
YEAR 2022: BASE CASE WITH REINFORCEMENT

Exhibit-1-2022-2.1

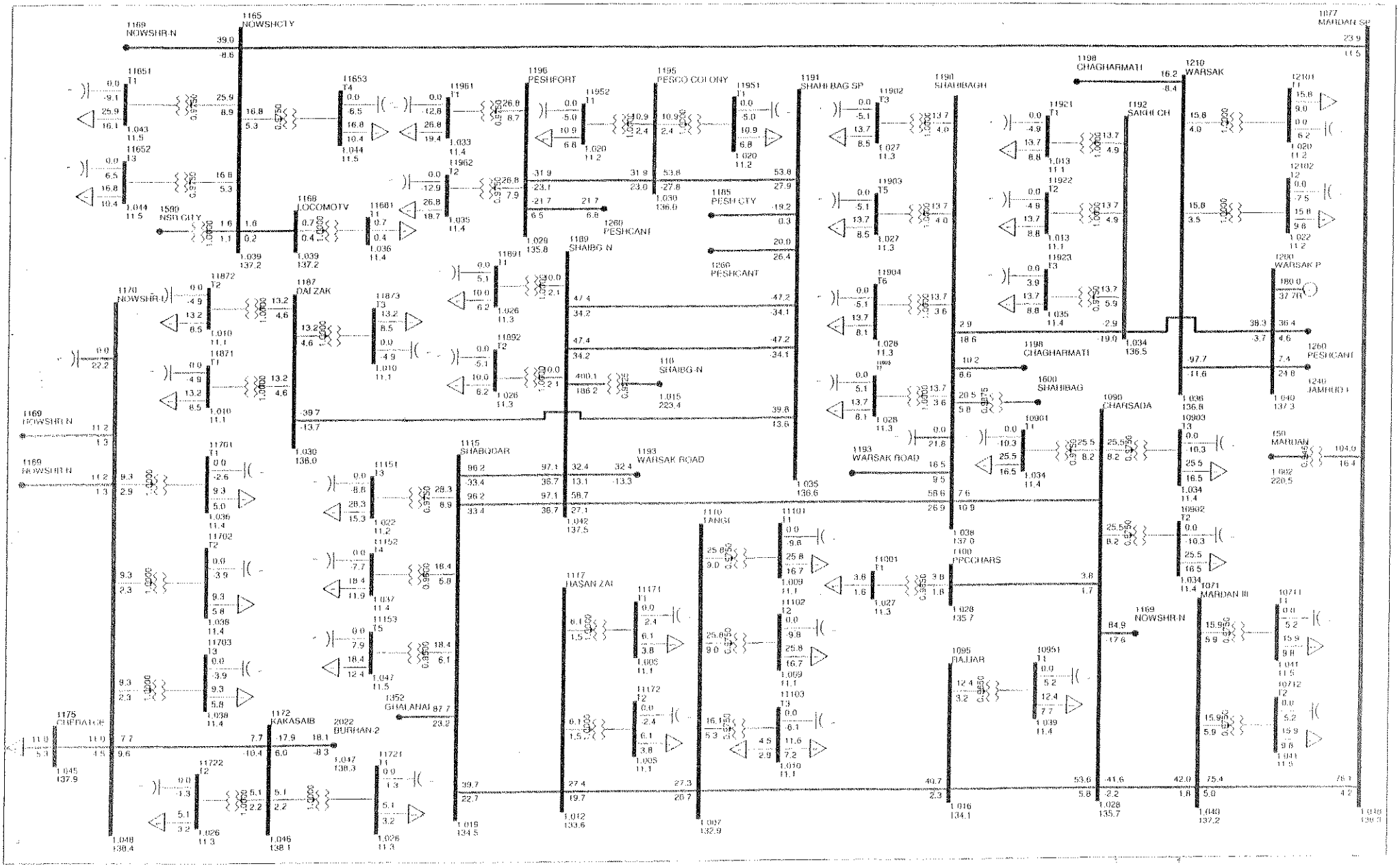

PESCO LOAD FLOW STUDY FOR (DIIP) FIVE YEAR PLAN
YEAR 2022: BASE CASE WITH REINFORCEMENT

Exhibit-1-2022-2.2

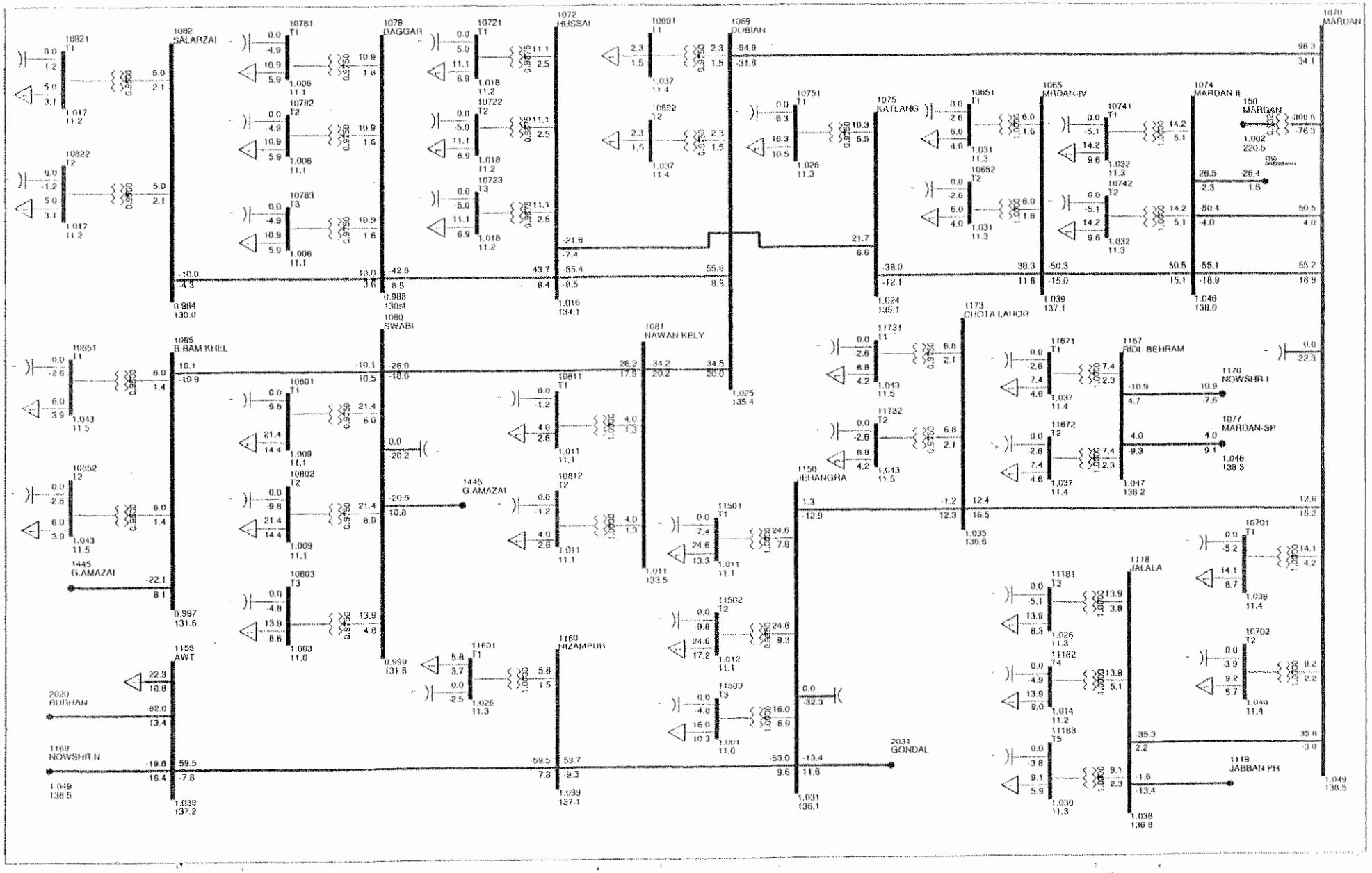

PESCO LOAD FLOW STUDY FOR (DIIP) FIVE YEAR PLAN
YEAR 2022: BASE CASE WITH REINFORCEMENT

Exhibit-1-2022-1.3

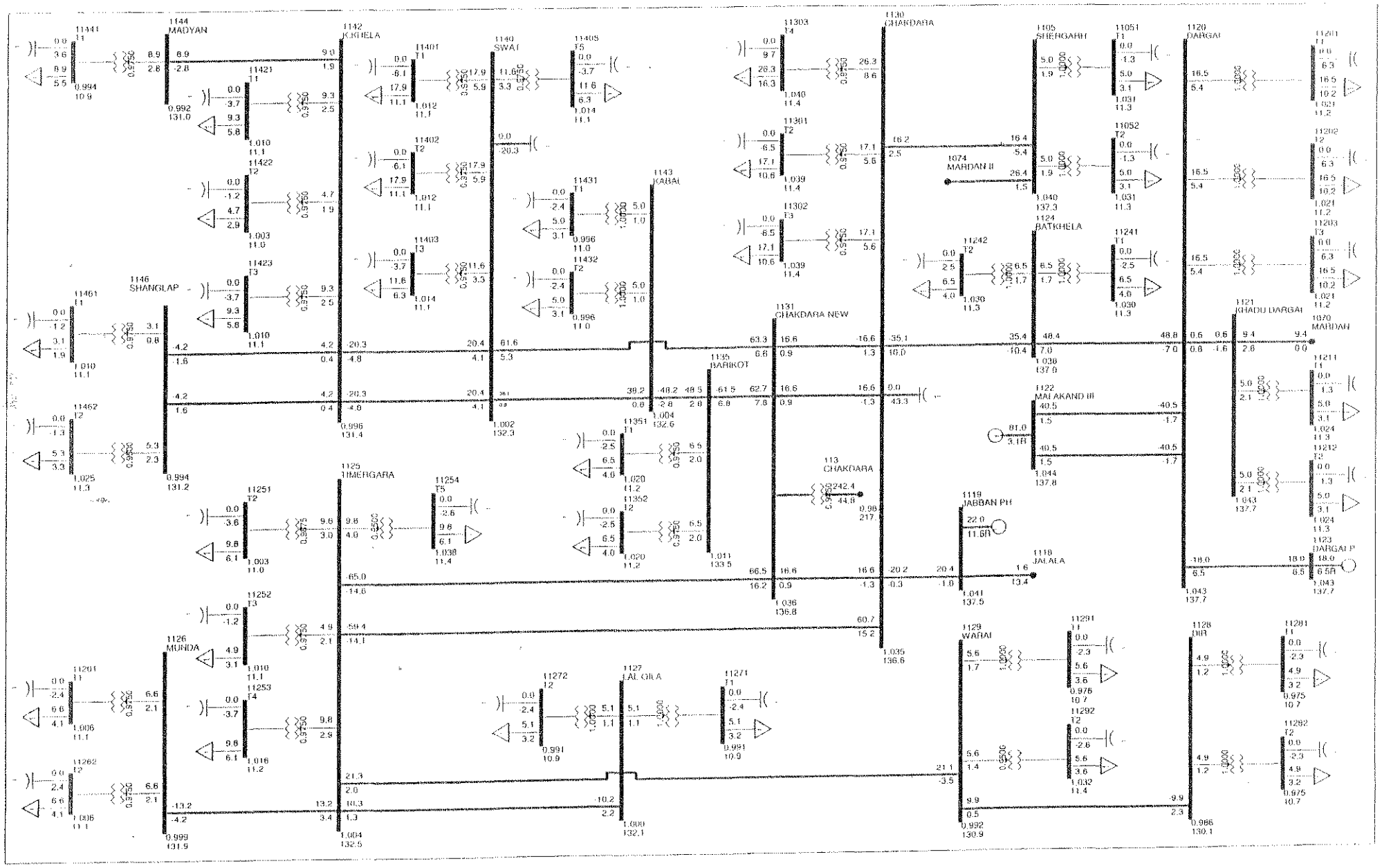

PESCO LOAD FLOW STUDY FOR (DIIP) FIVE YEAR PLAN
YEAR 2022: BASE CASE WITH REINFORCEMENT

Exhibit-1-2022-1.4

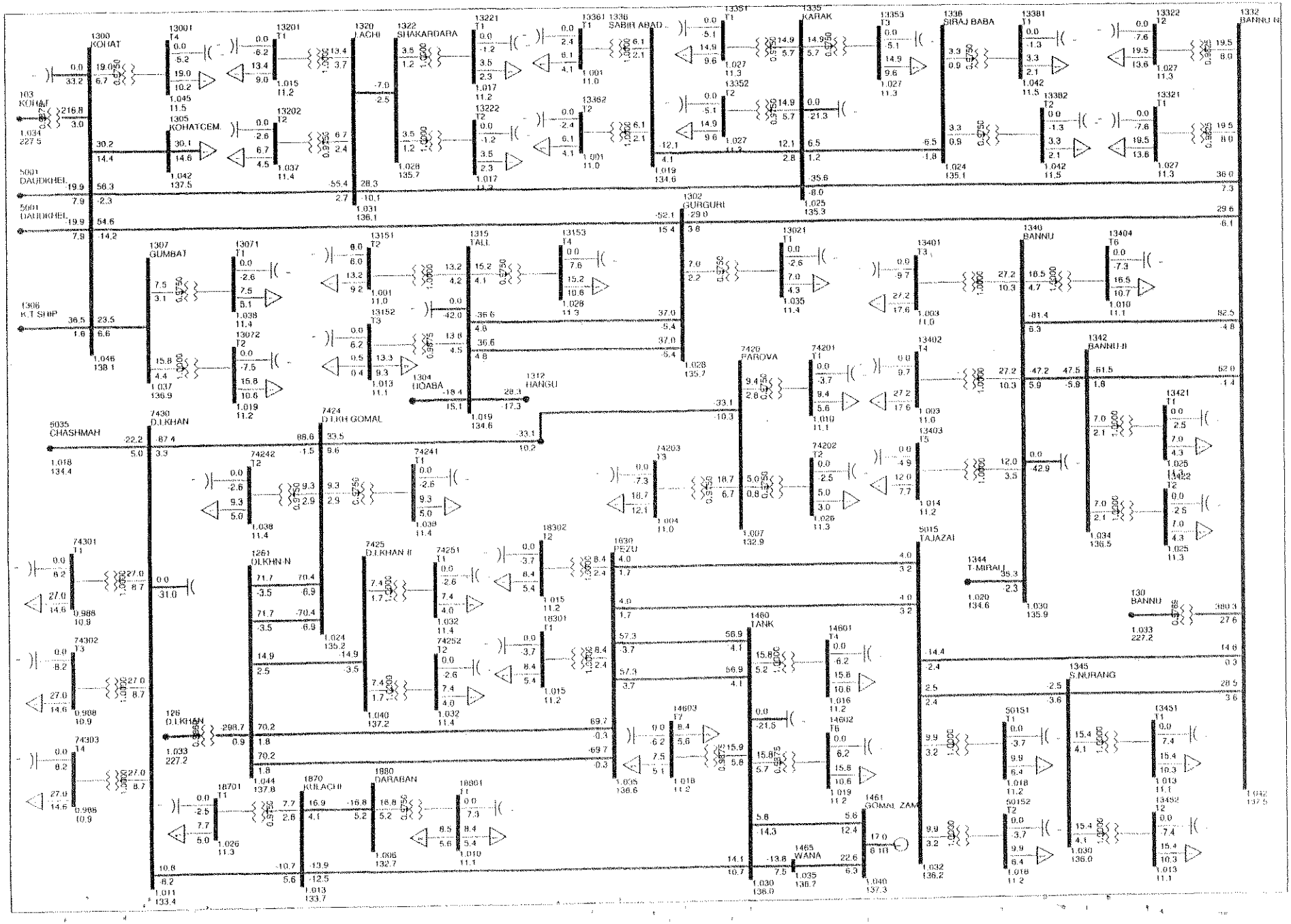

PESCO LOAD FLOW STUDY FOR (DIIP) FIVE YEAR PLAN
YEAR 2022: BASE CASE WITH REINFORCEMENT

Exhibit-1-2022-1.5

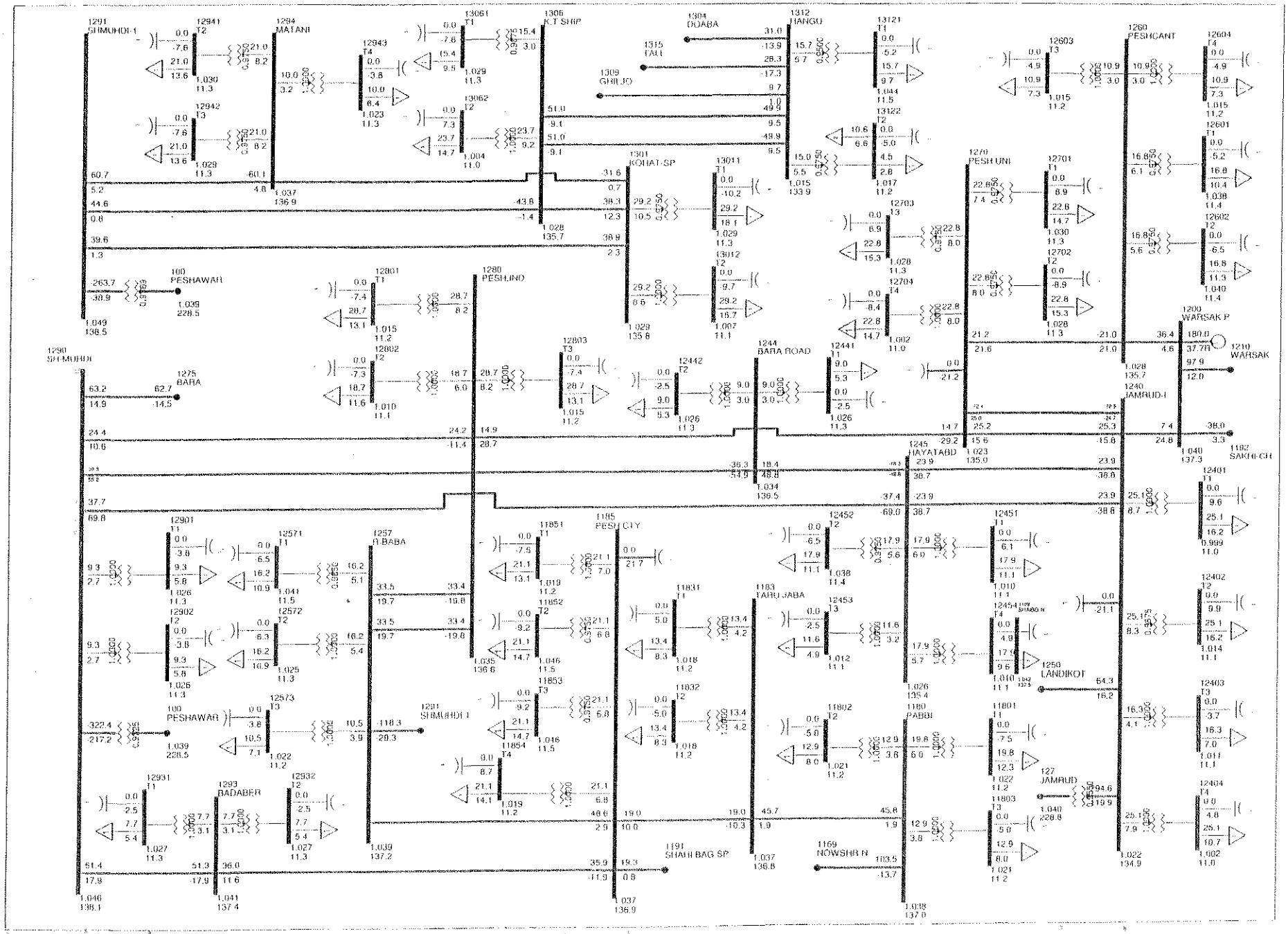

PESCO LOAD FLOW STUDY FOR (DIIP) FIVE YEAR PLAN
YEAR 2022: BASE CASE WITH REINFORCEMENT

Exhibit-1-2022-1.6

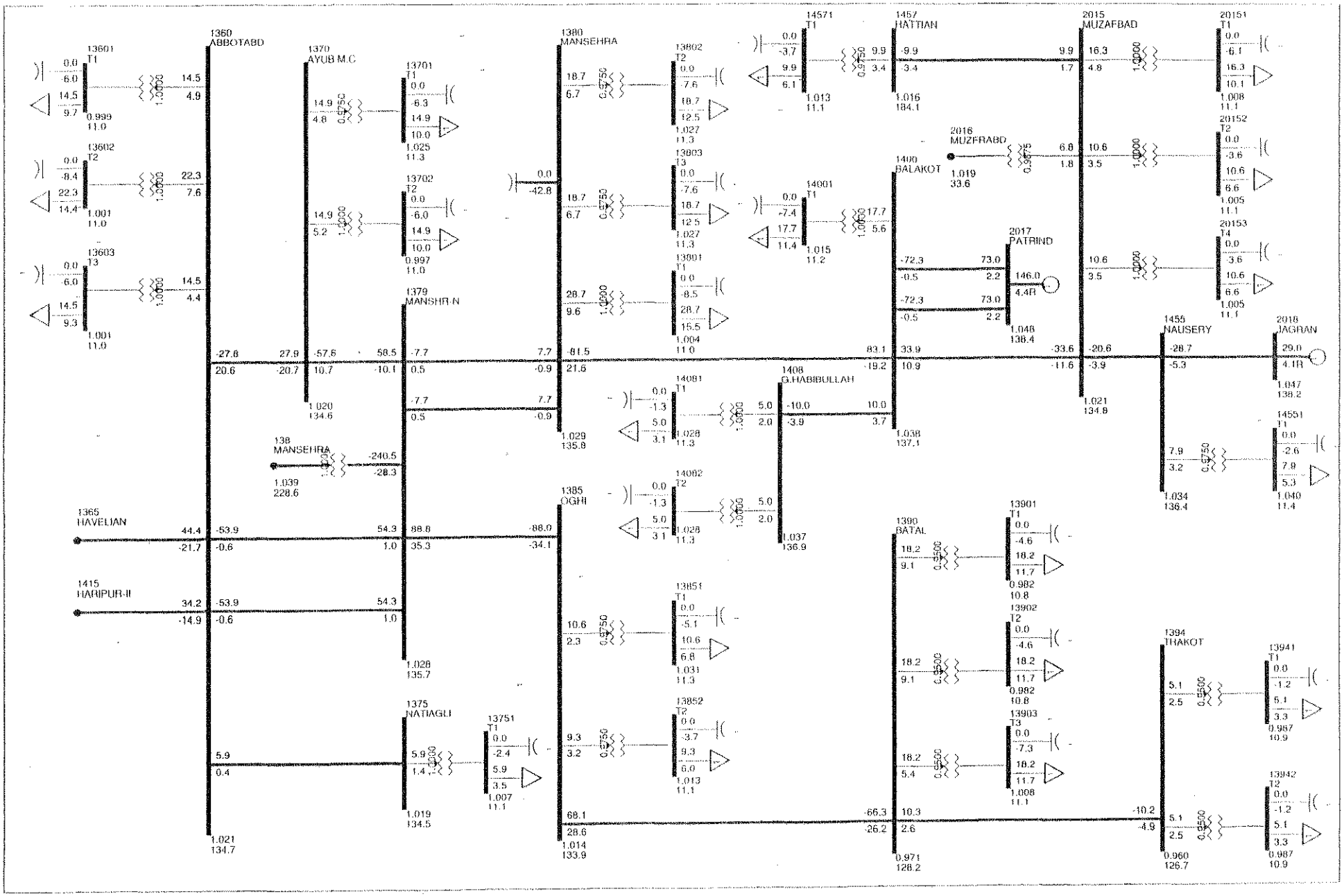

PESCO LOAD FLOW STUDY FOR (DIIP) FIVE YEAR PLAN
YEAR 2022: BASE CASE WITH REINFORCEMENT

Exhibit-1-2022-1.7

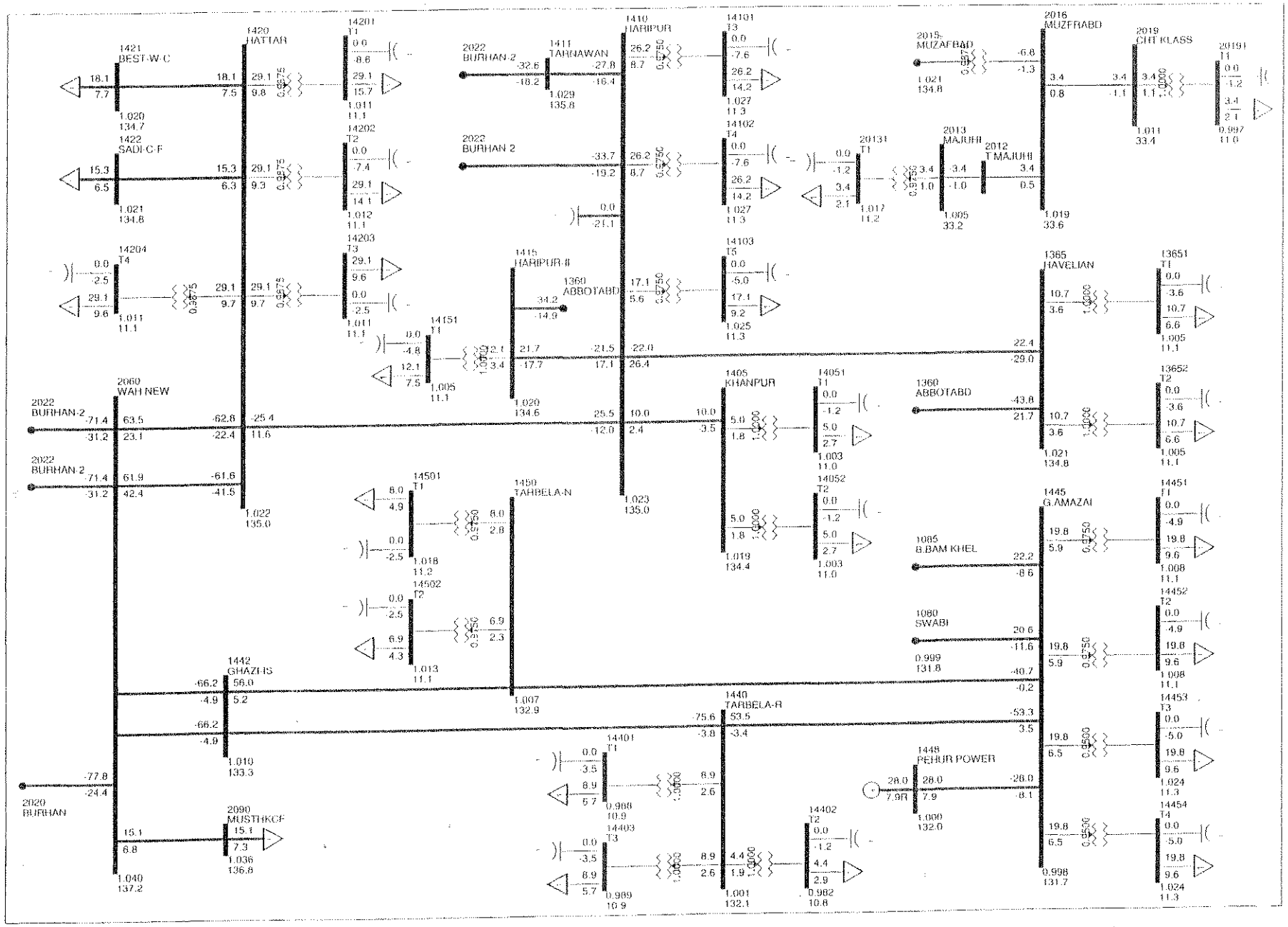

PESCO LOAD FLOW STUDY FOR (DIIP) FIVE YEAR PLAN
YEAR 2022: BASE CASE WITH REINFORCEMENT

Exhibit-1-2022-1.8

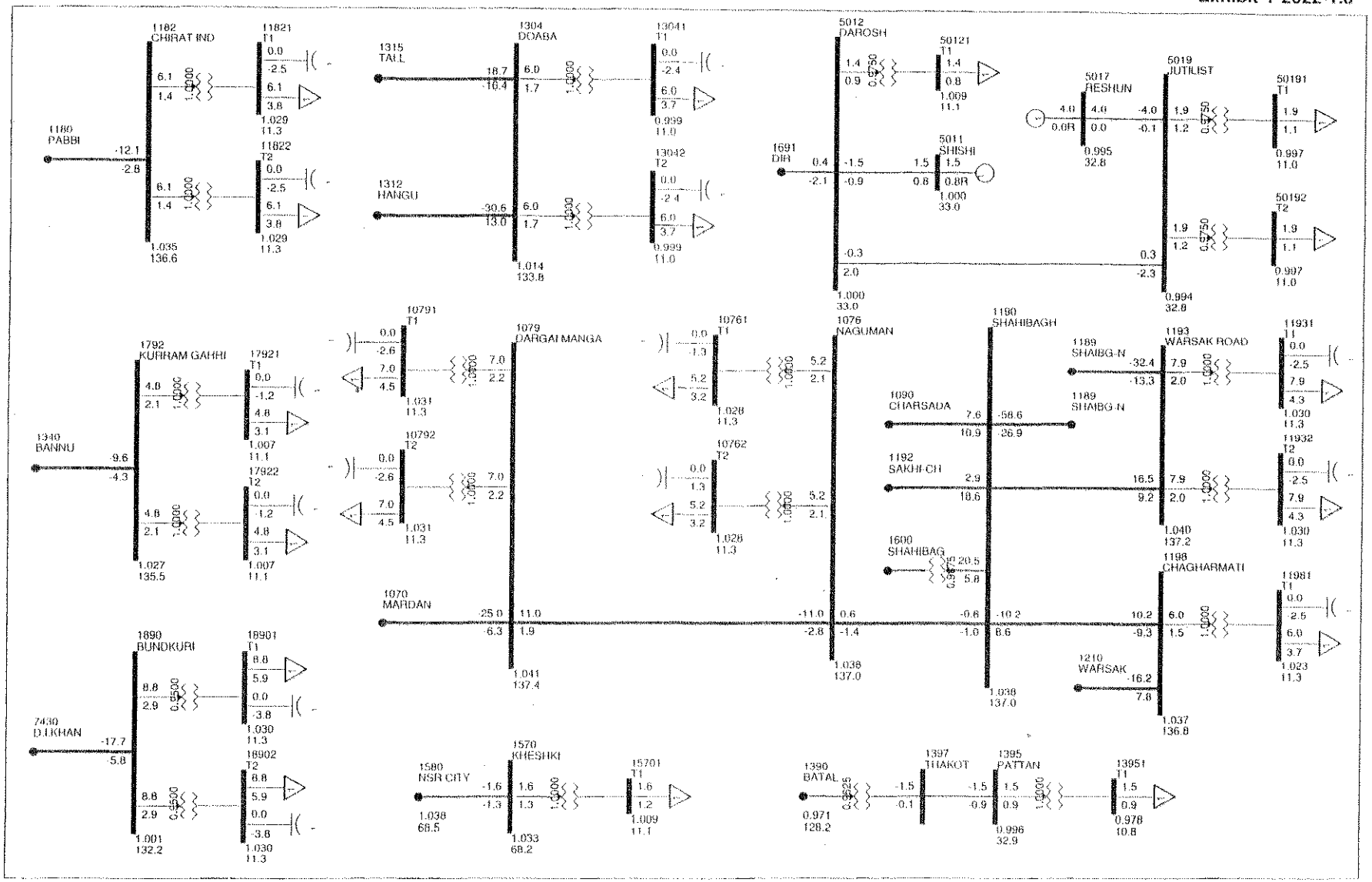

PESCO LOAD FLOW STUDY
YEAR 2020: BASE CASE WITHOUT 11 KV FEEDER HATTAR SEZ

Exhibit-1-2020-1.7

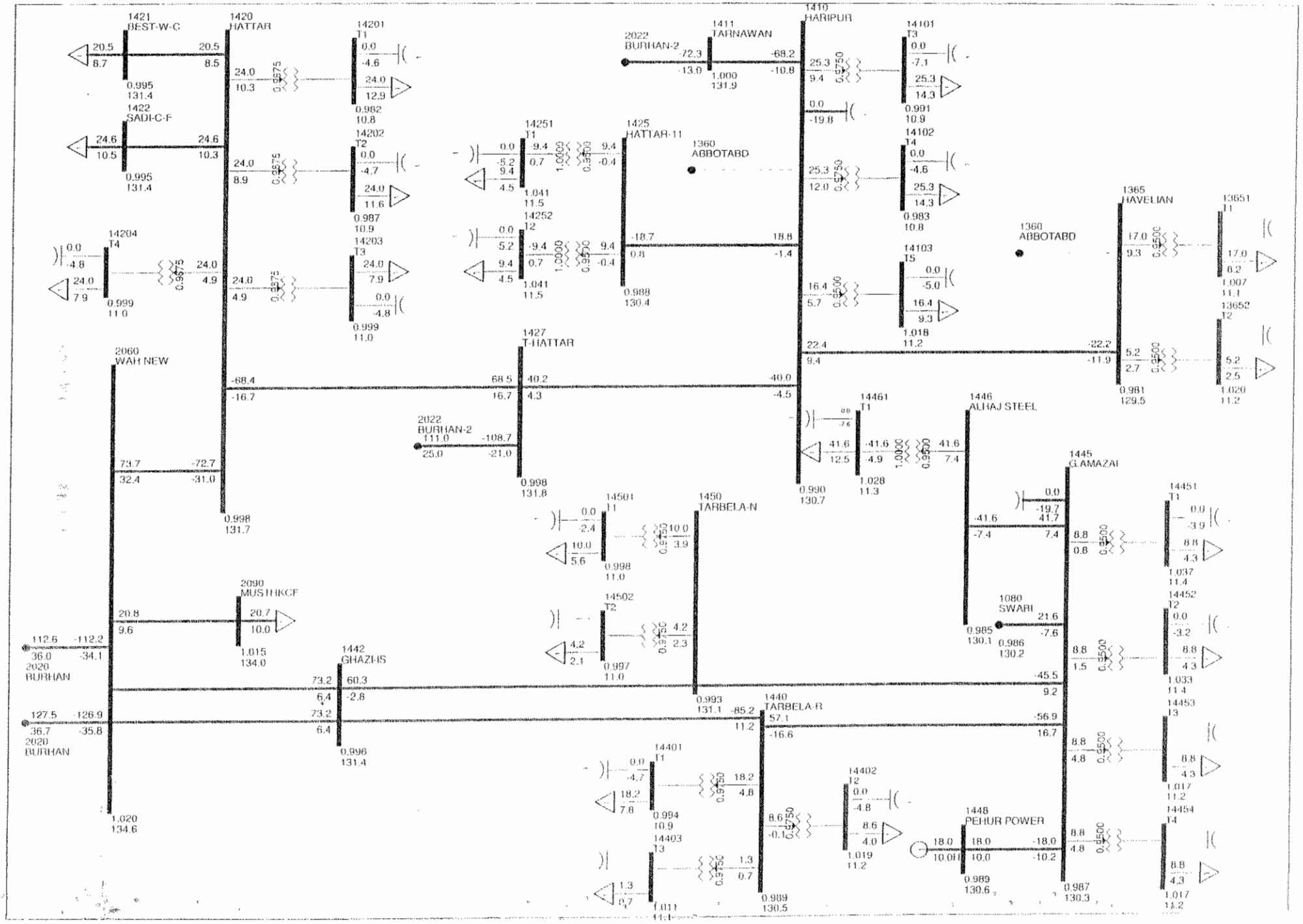

PESCO LOAD FLOW STUDY
YEAR 2020: BASE CASE WITH 11 KV FEEDER HATTAR SEZ

Exhibit-1-2020-2.7

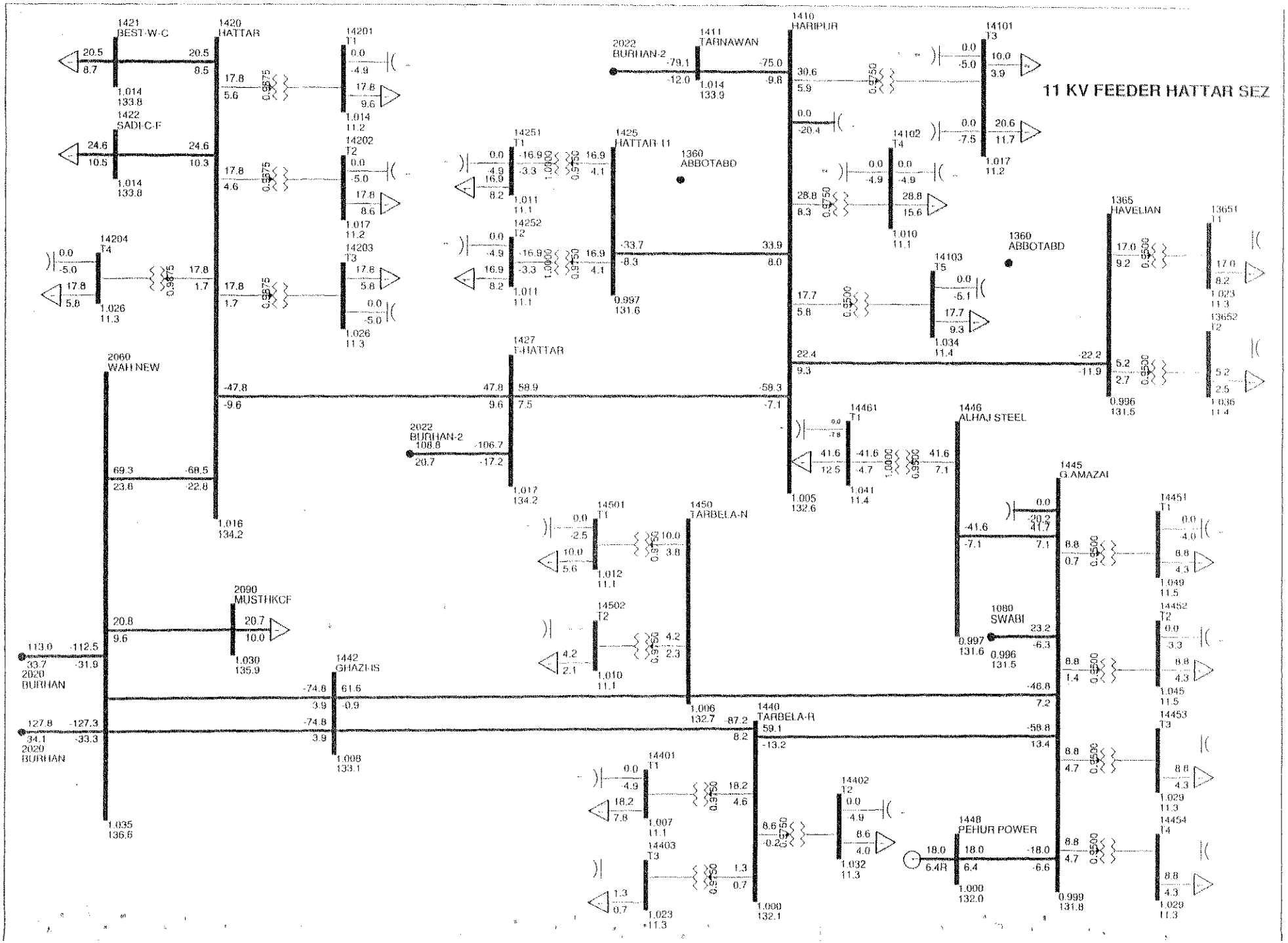

PESCO LOAD FLOW STUDY
YEAR 2021: BASE CASE WITH 132 KV GRID STATION HATTAR SEZ

Exhibit-1-2021-2.7

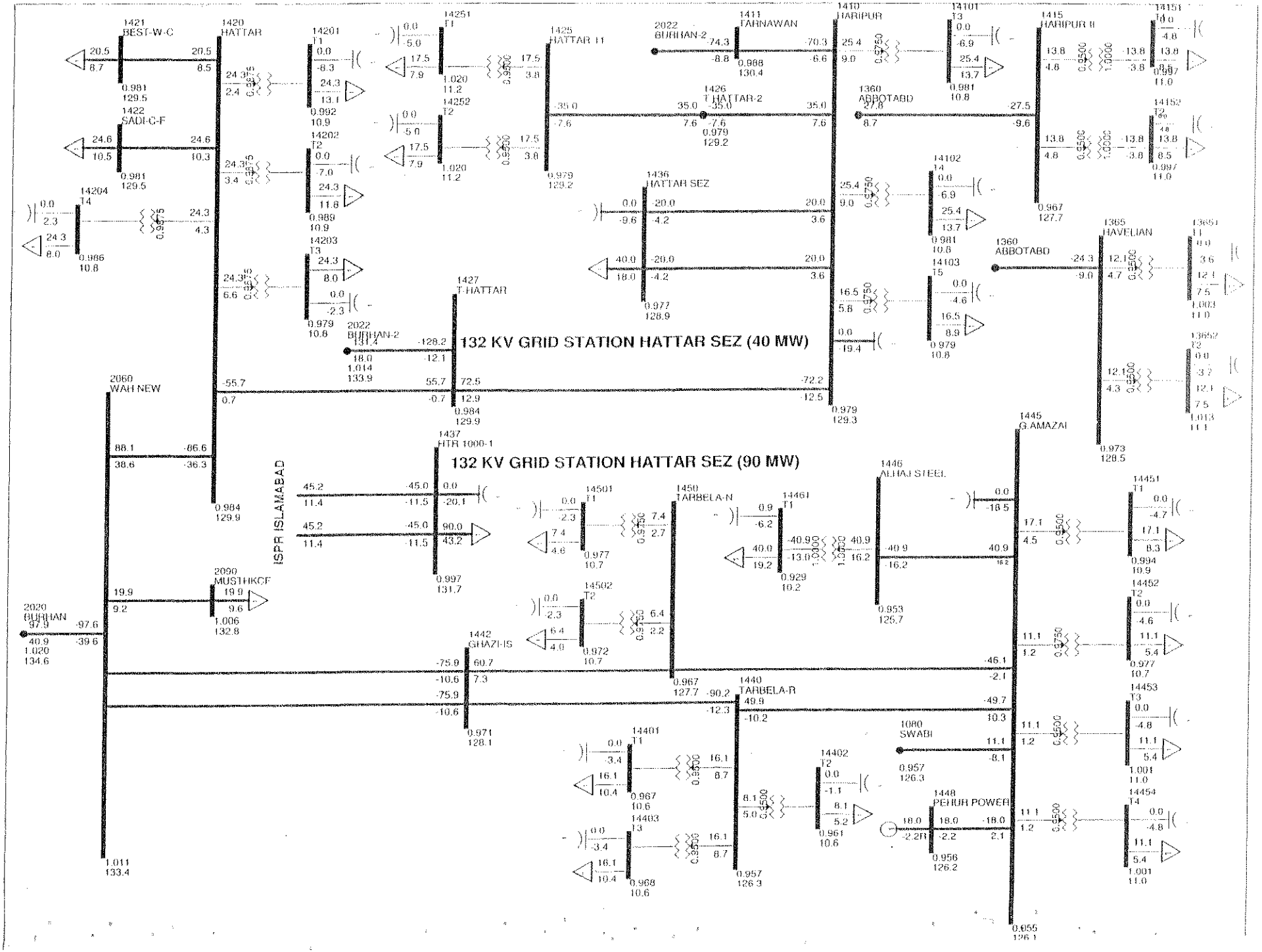

PESCO LOAD FLOW STUDY
YEAR 2021: BASE CASE WITHOUT 132 KV GRID STATION HATTAR SEZ

Exhibit-1-2021-1.7

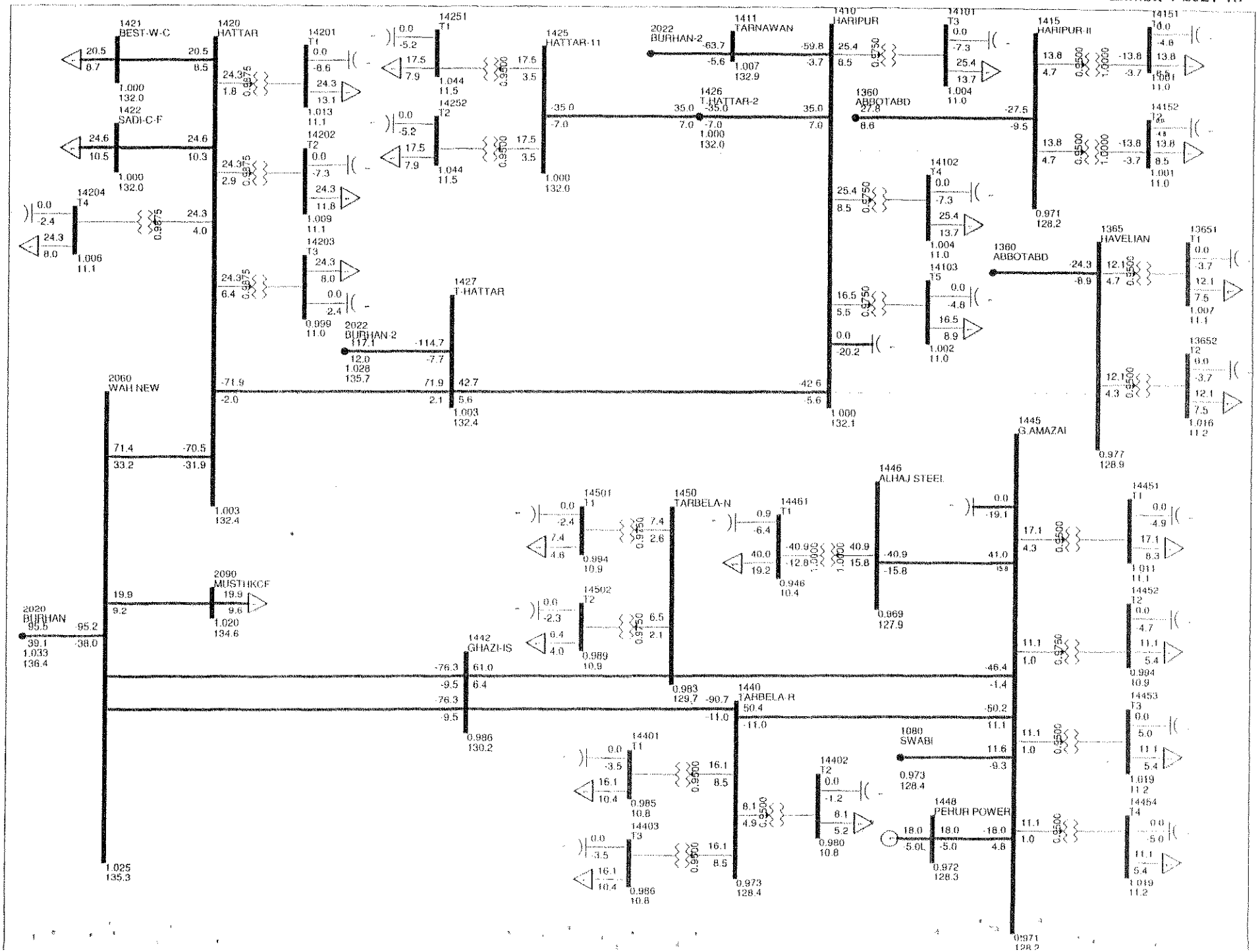

PESCO LOAD FLOW STUDY
YEAR 2022-23: BASE CASE WITHOUT 220/132 KV GRID STATION HARIPUR

Exhibit-1-2022-1.7

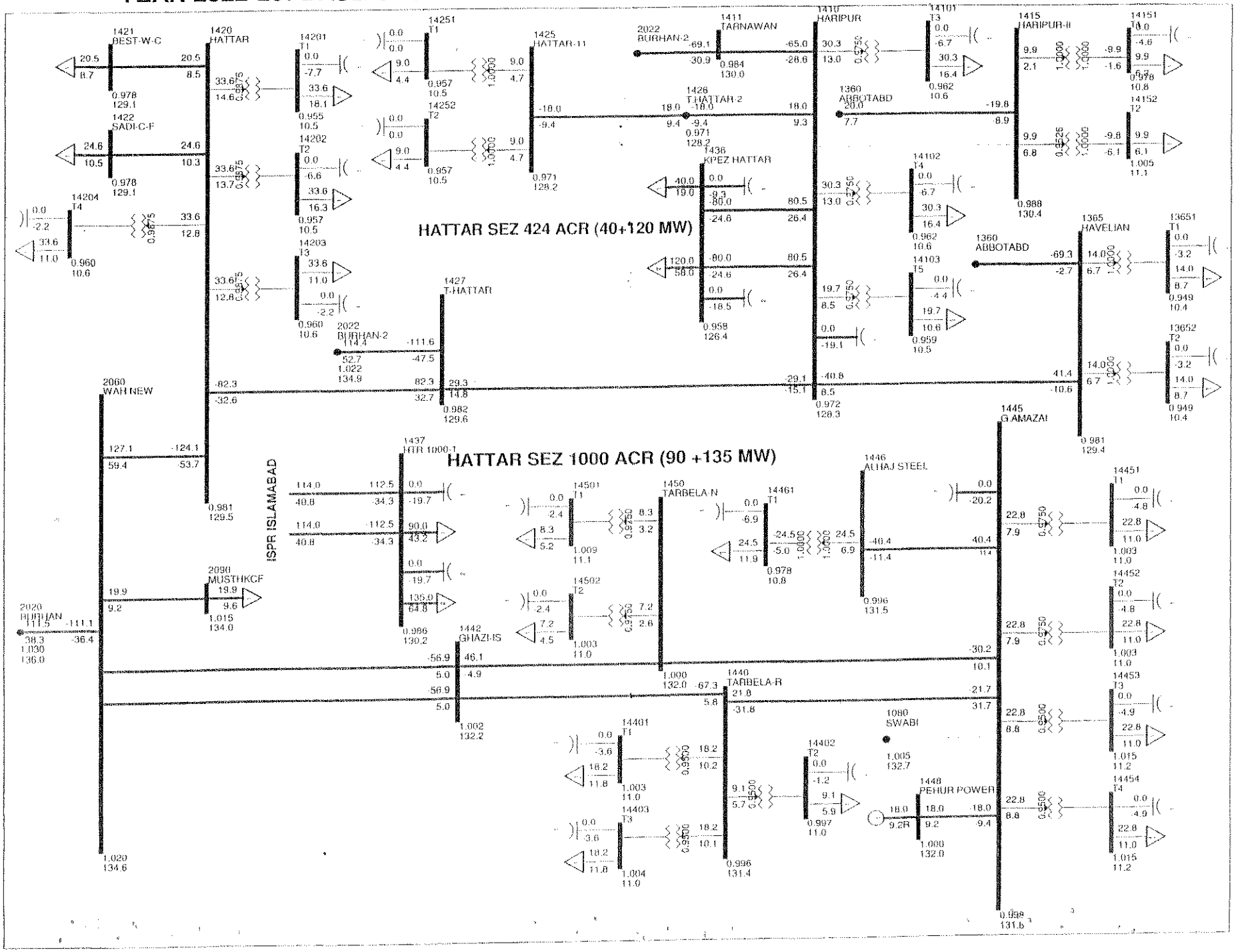

PESCO LOAD FLOW STUDY
YEAR 2022-23: BASE CASE WITH 220/132 KV GRID STATION HARIPUR

Exhibit-1-2022-2.7

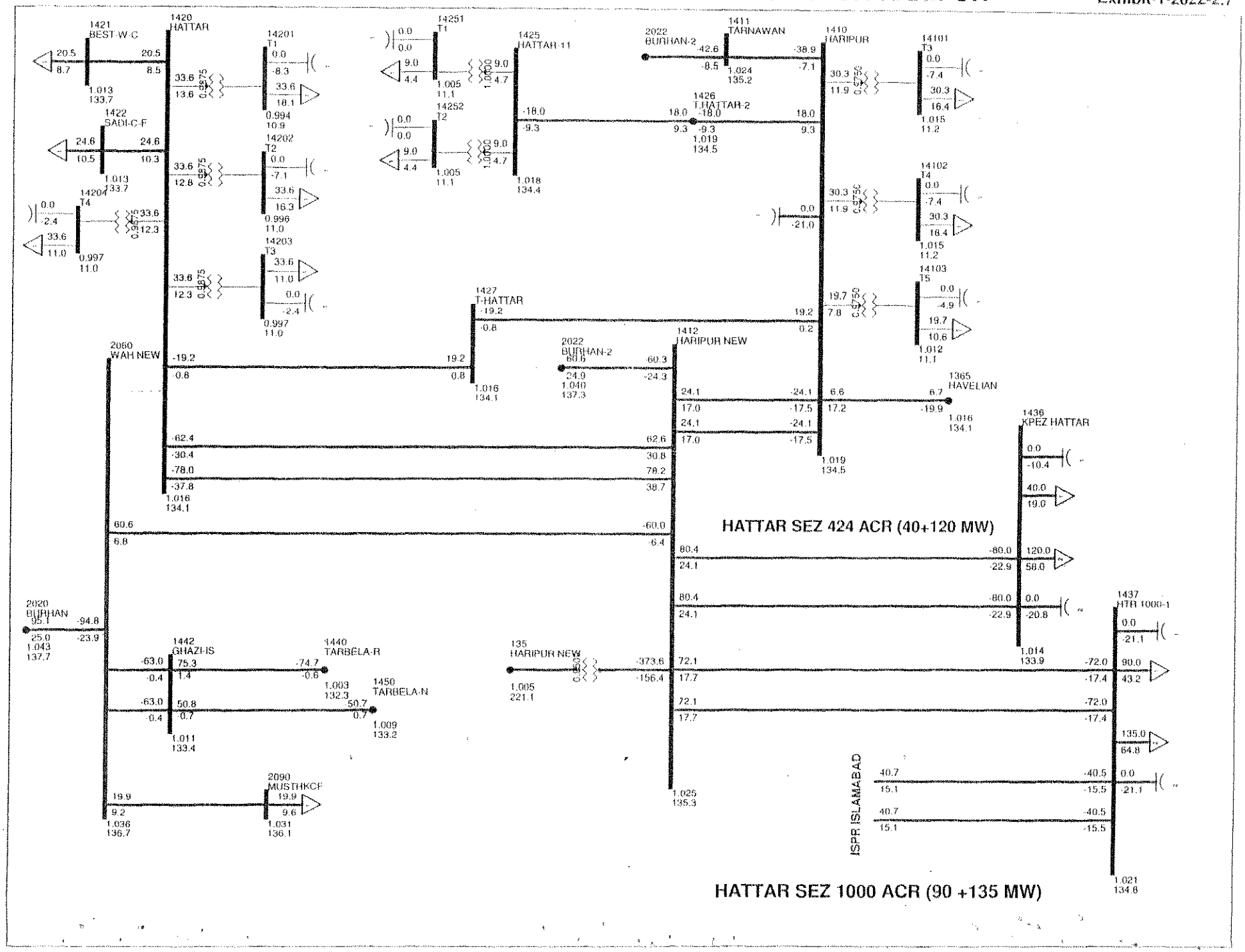

PESCO LOAD FLOW STUDY
YEAR 2020: BASE CASE WITHOUT 11 KV FEEDER RASHAKAI SEZ

Exhibit-1-2020-1.2

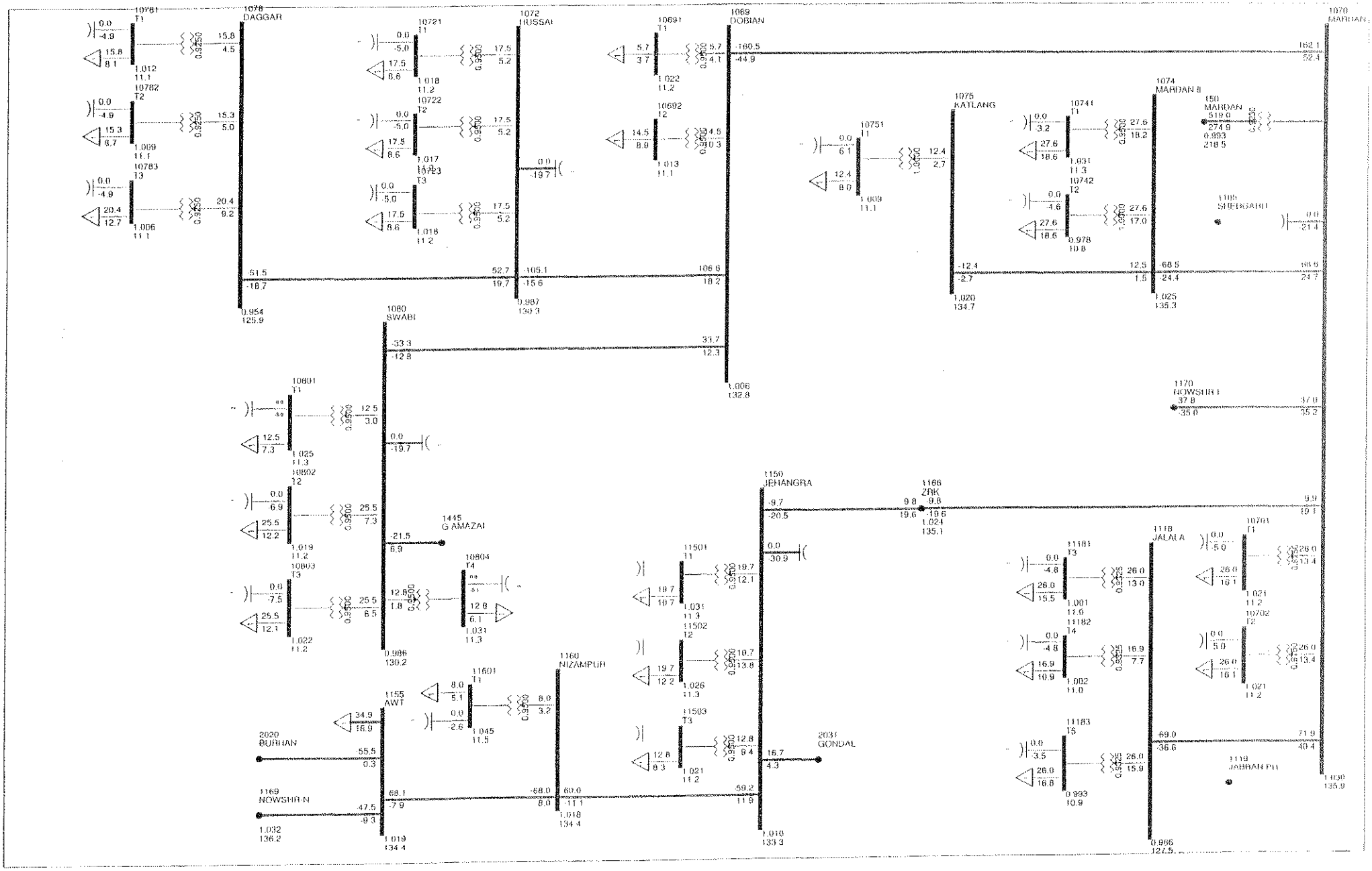

PESCO LOAD FLOW STUDY
YEAR 2020: BASE CASE WITH 11 KV FEEDER RASHAKAI SEZ

Exhibit-1-2020-2.2

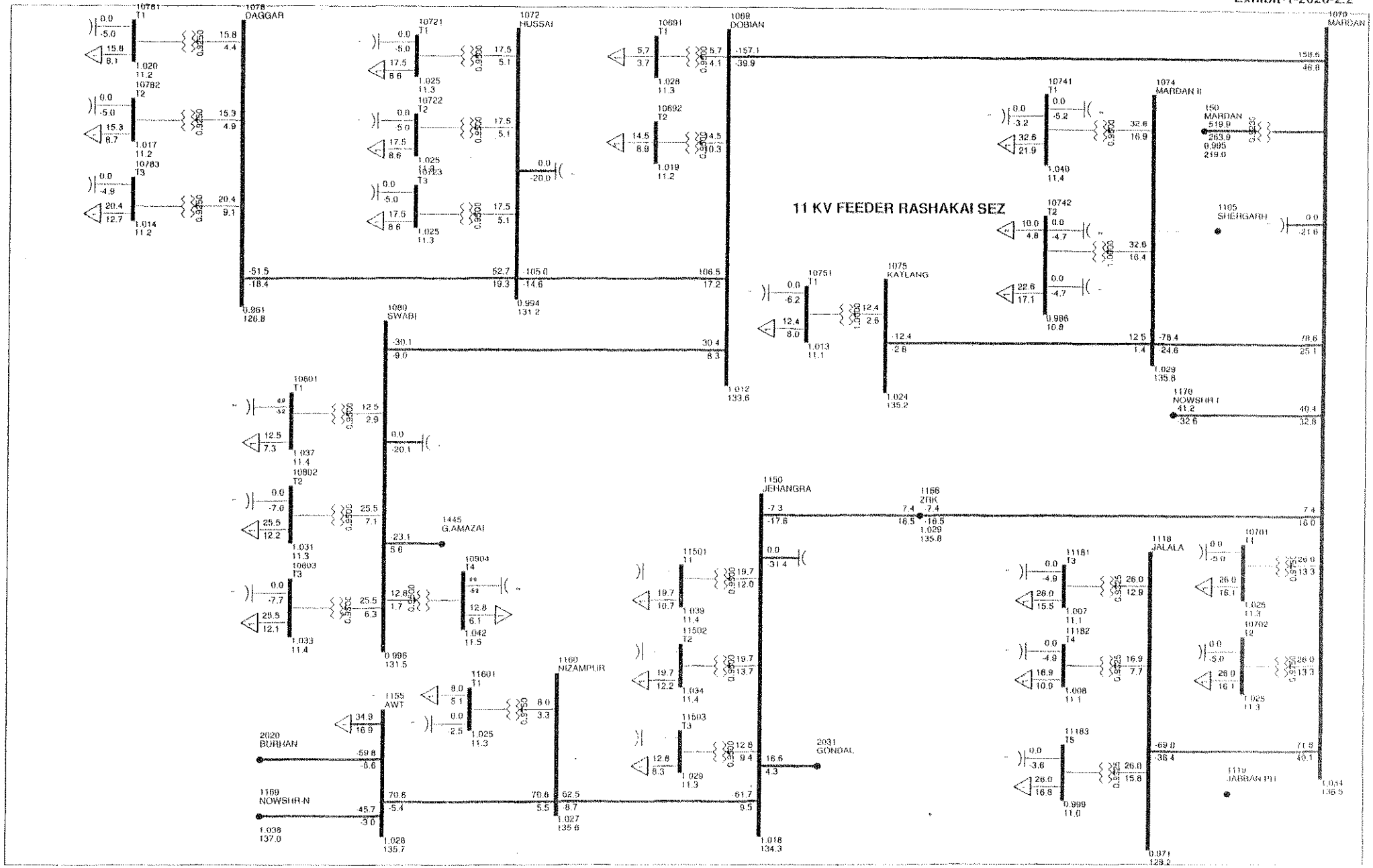

PESCO LOAD FLOW STUDY
YEAR 2023-24: BASE CASE WITHOUT REINFORCEMENT

Exhibit-2-2024-1.4

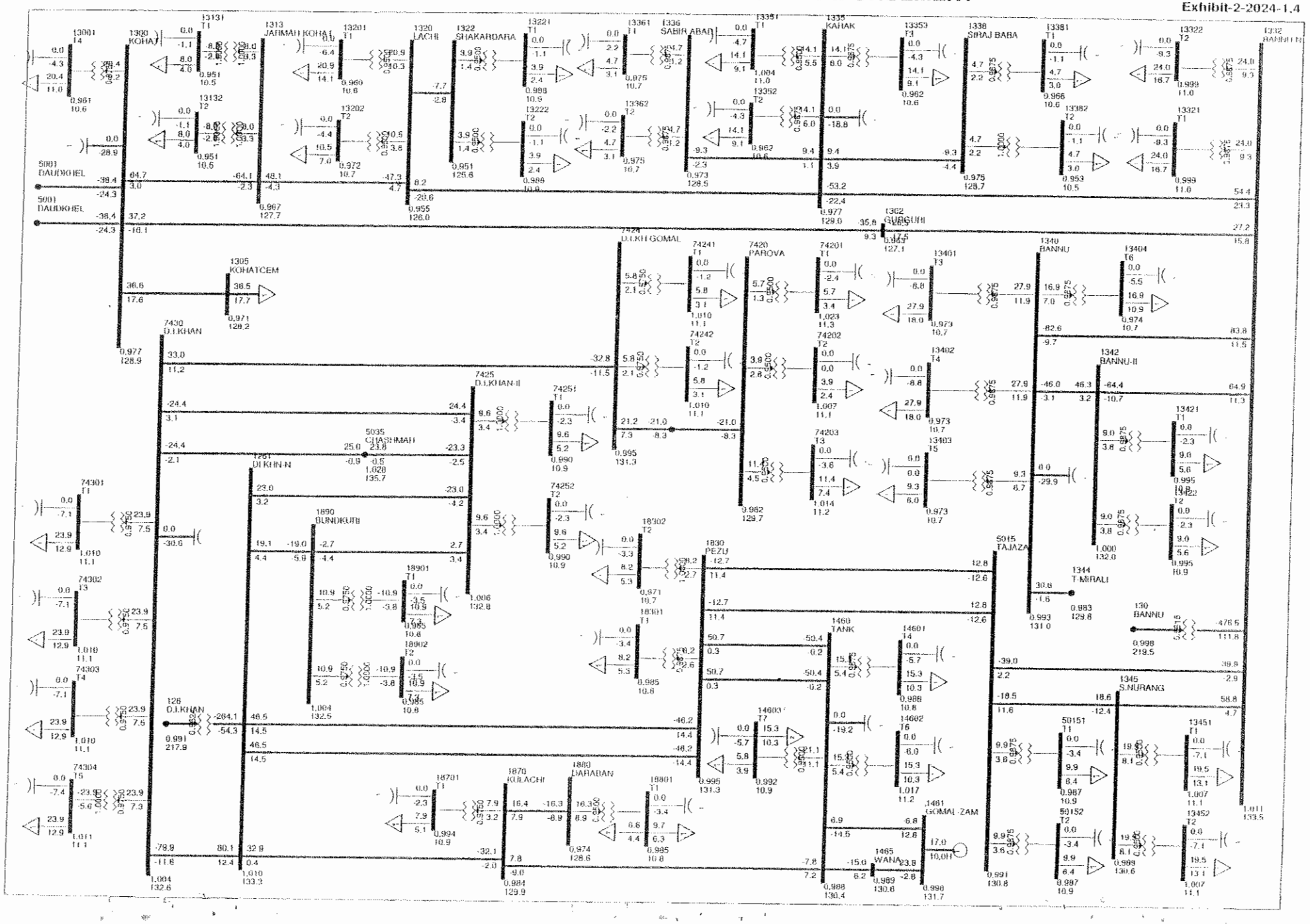

YEAR 2023-24: BASE CASE WITHOUT REINFORCEMENT

Exhibit-1-2024-1.5

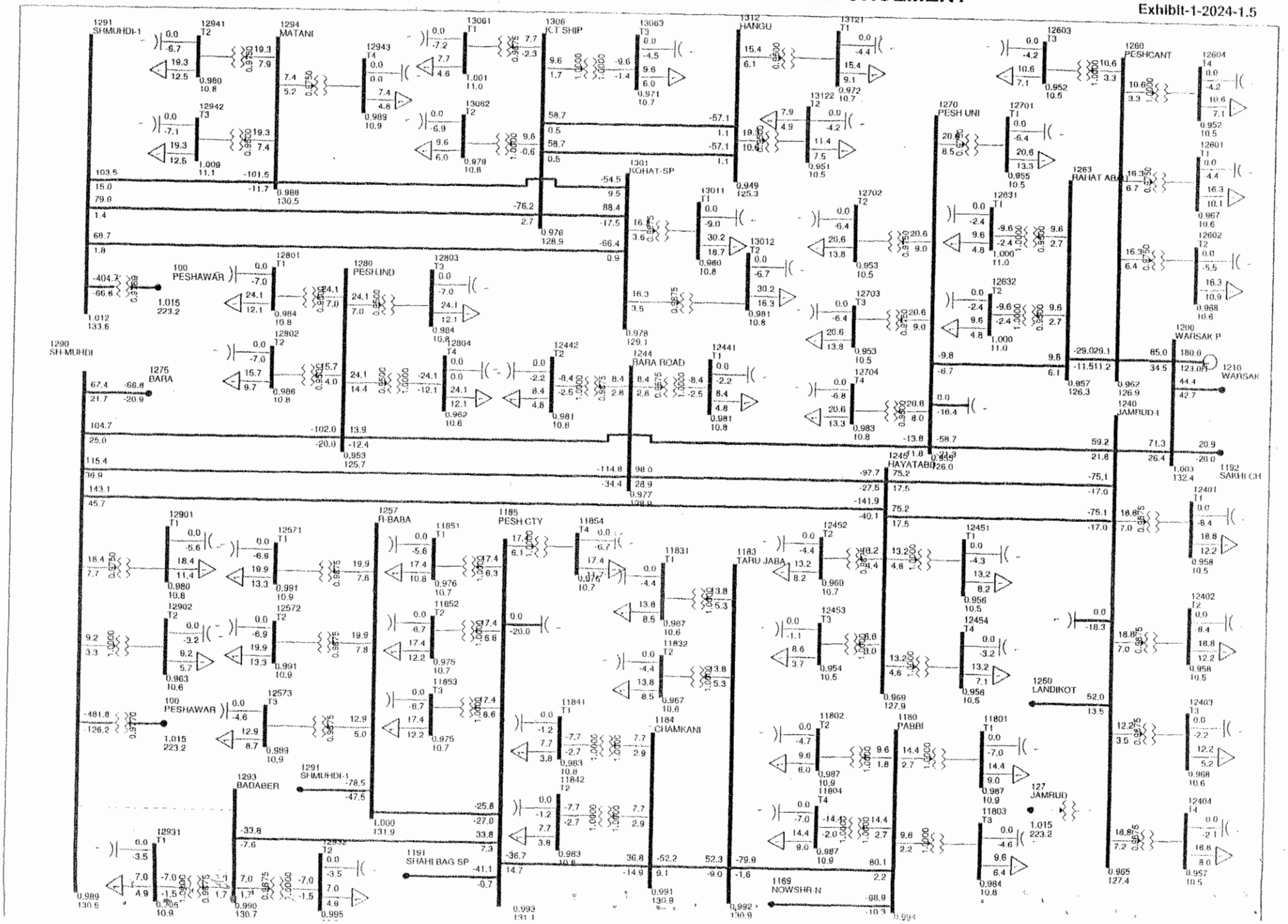

PESCO LOAD FLOW STUDY
YEAR 2023-24: BASE CASE WITHOUT REINFORCEMENT

Exhibit-1-2024-1.6

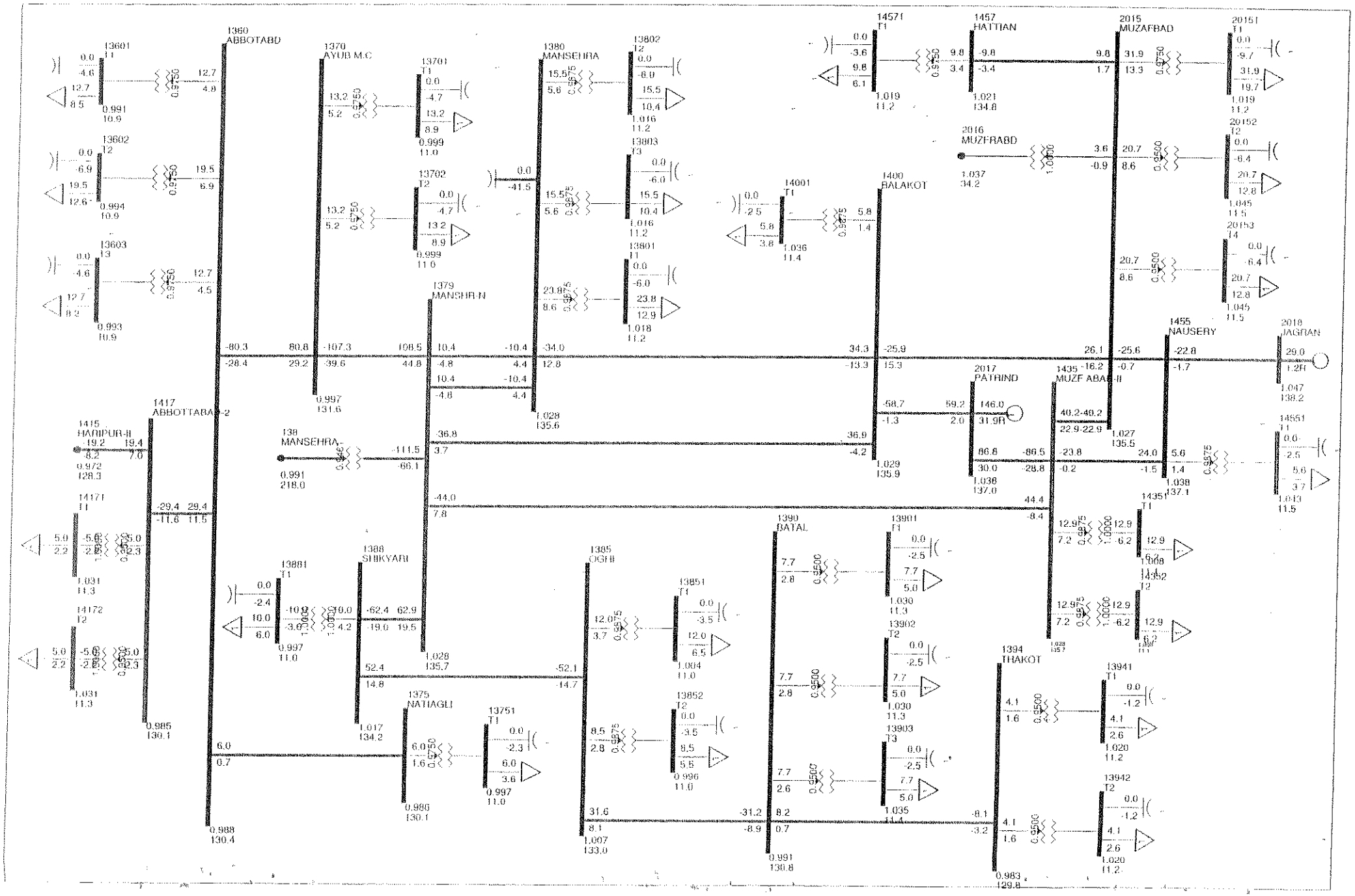

YEAR 2023-24: BASE CASE WITHOUT REINFORCEMENT

Exhibit-2-2024-1.7

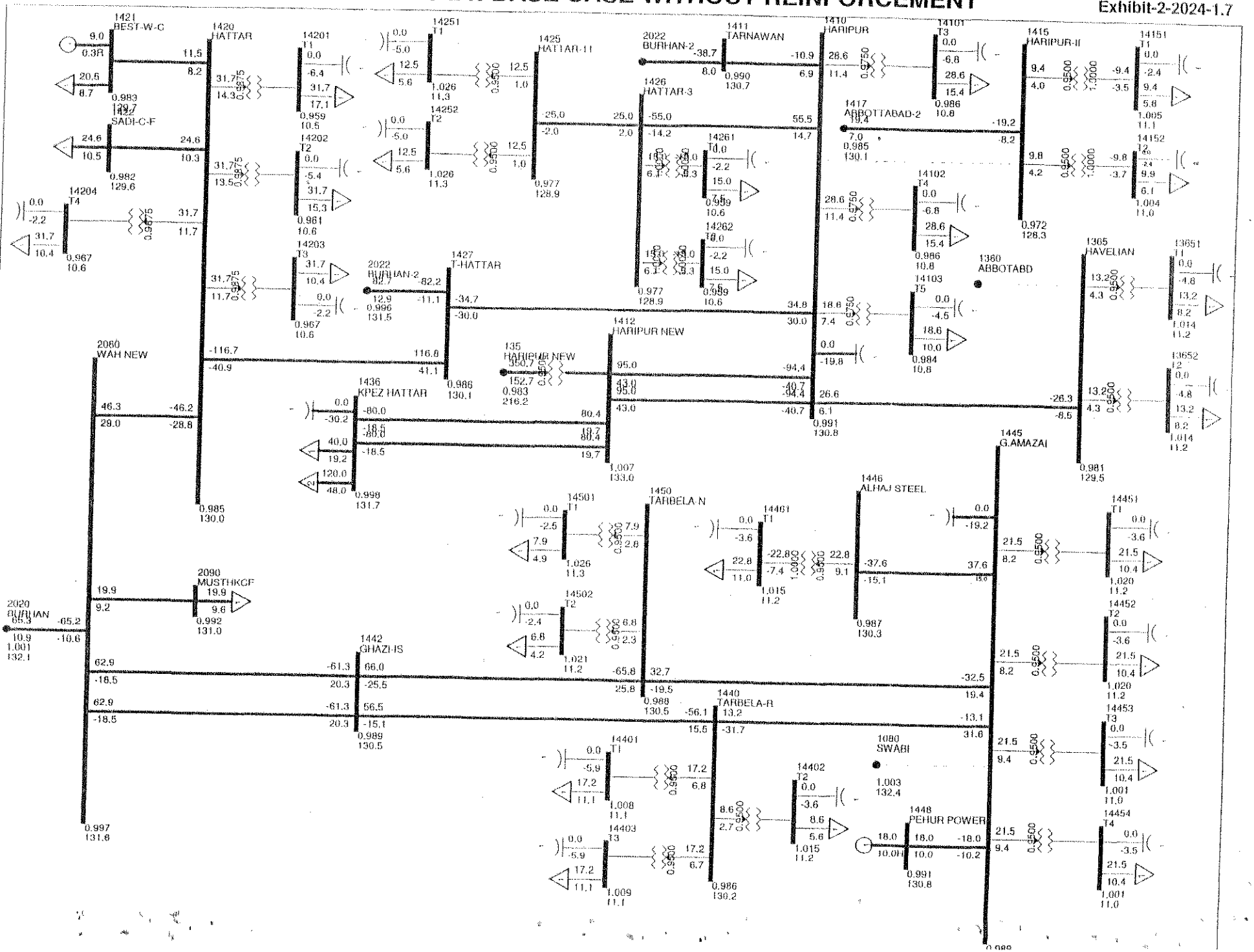

PESCO LOAD FLOW STUDY
YEAR 2023-24: BASE CASE WITH REINFORCEMENT

Exhibit-2-2024-2.4

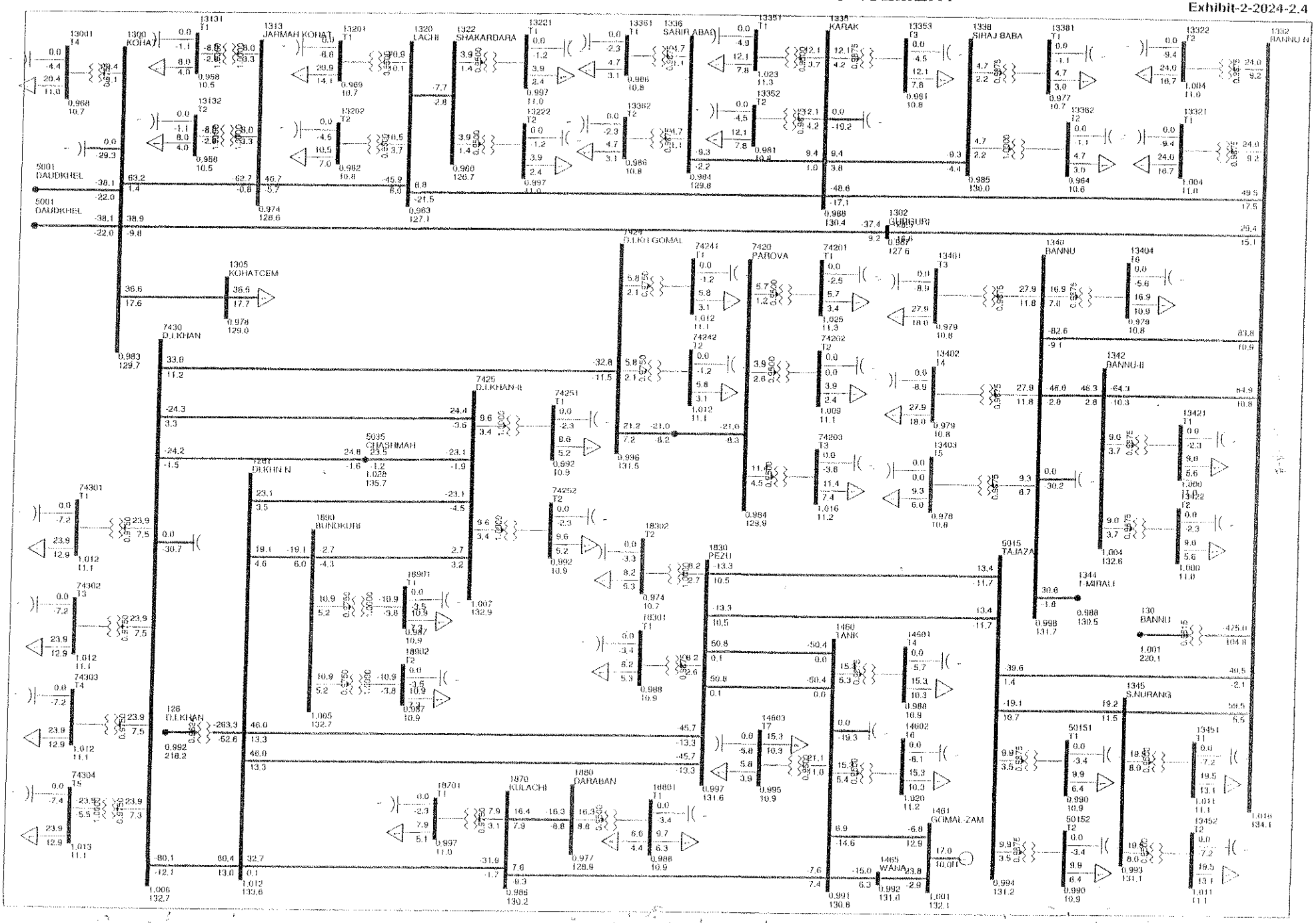

YEAR 2023-24: BASE CASE WITH REINFORCEMENT

Exhibit-1-2024-2.5

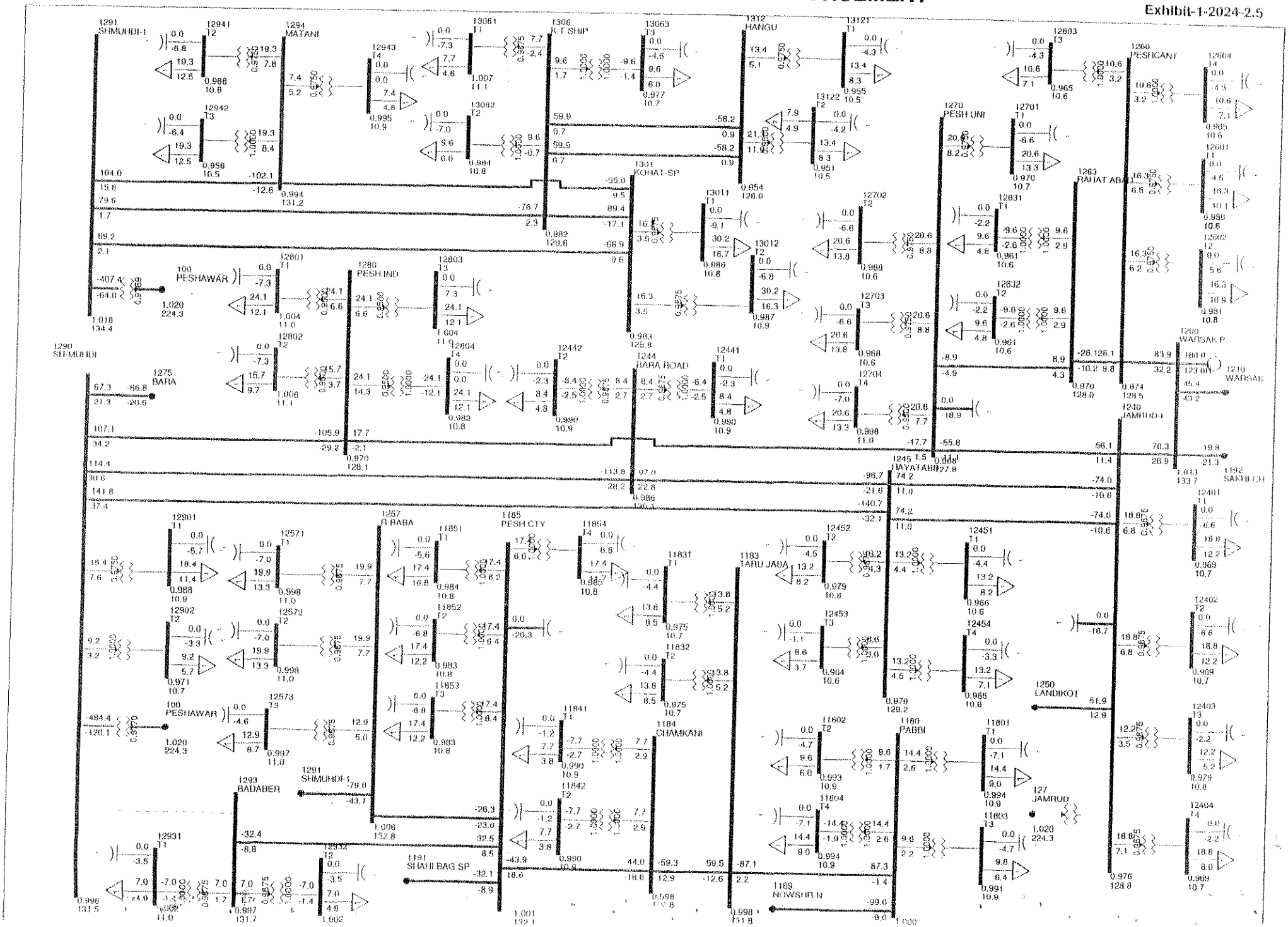

PESCO LOAD FLOW STUDY
YEAR 2023-24: BASE CASE WITH REINFORCEMENT

Exhibit-1-2024-2.6

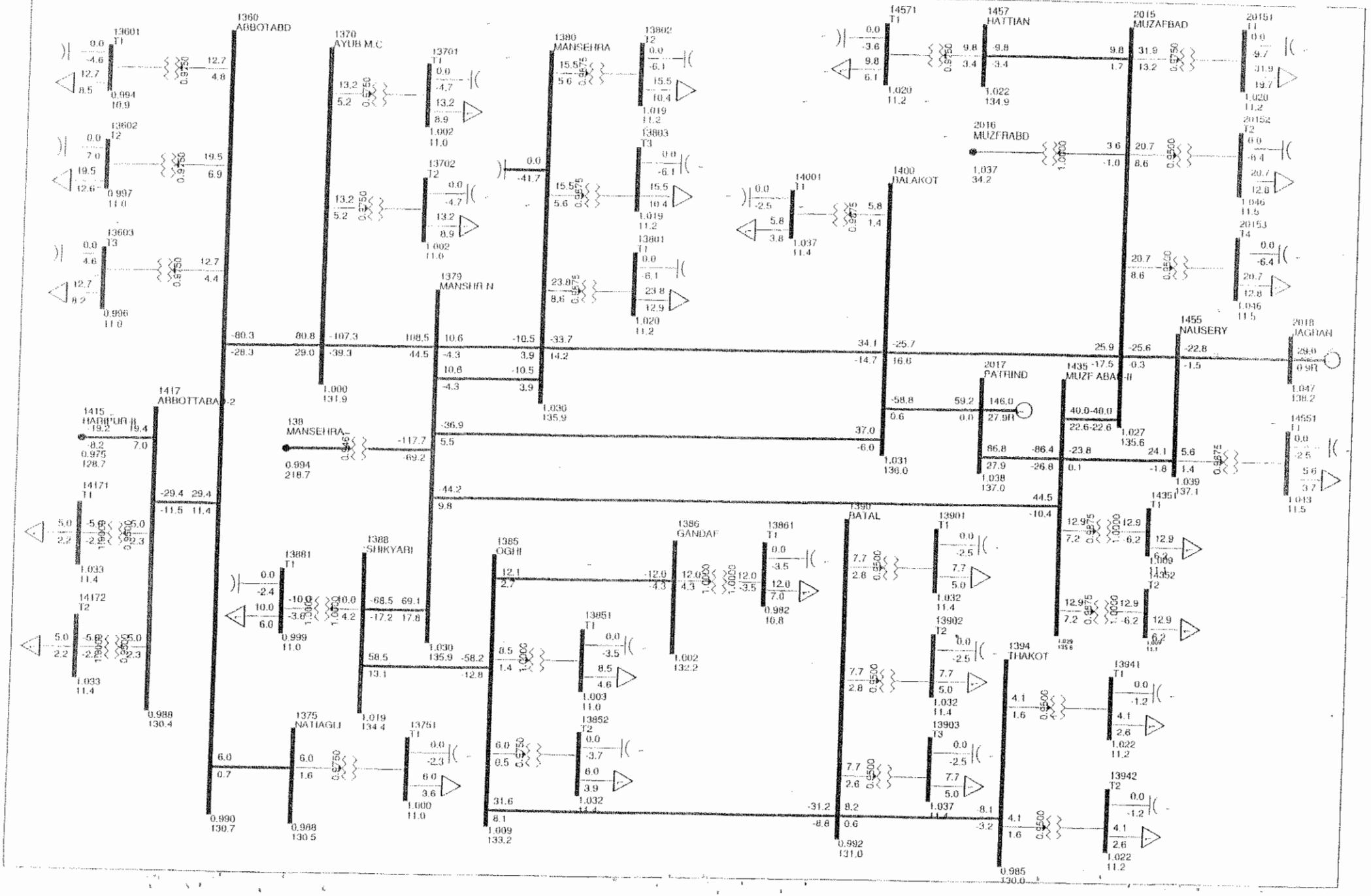

PESCO LOAD FLOW STUDY
YEAR 2023-24: BASE CASE WITH REINFORCEMENT

Exhibit-2-2024-2.7

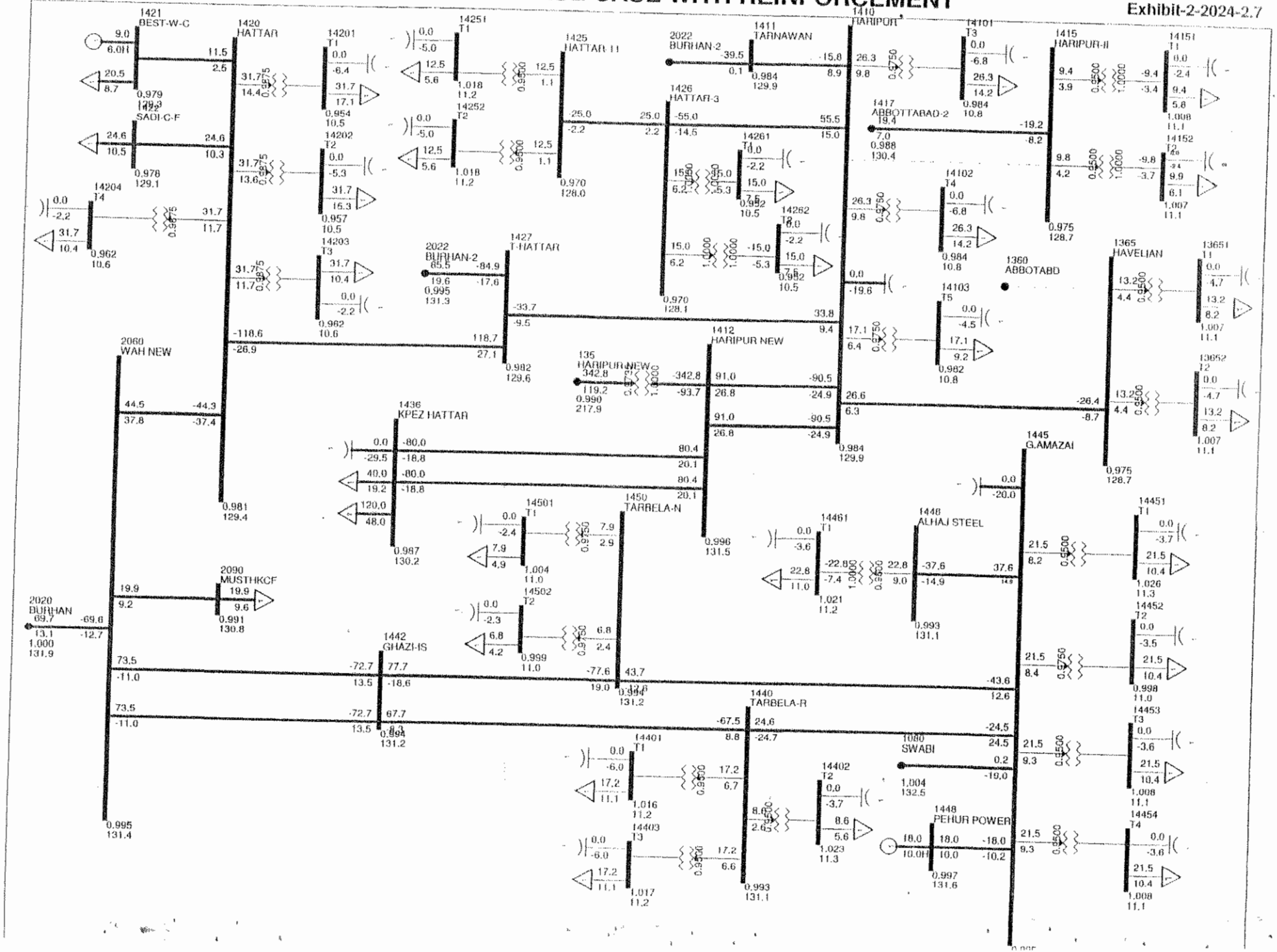

PESCO LOAD FLOW STUDY
YEAR 2023-24: BASE CASE WITHOUT REINFORCEMENT

Exhibit-1-2024-1.1

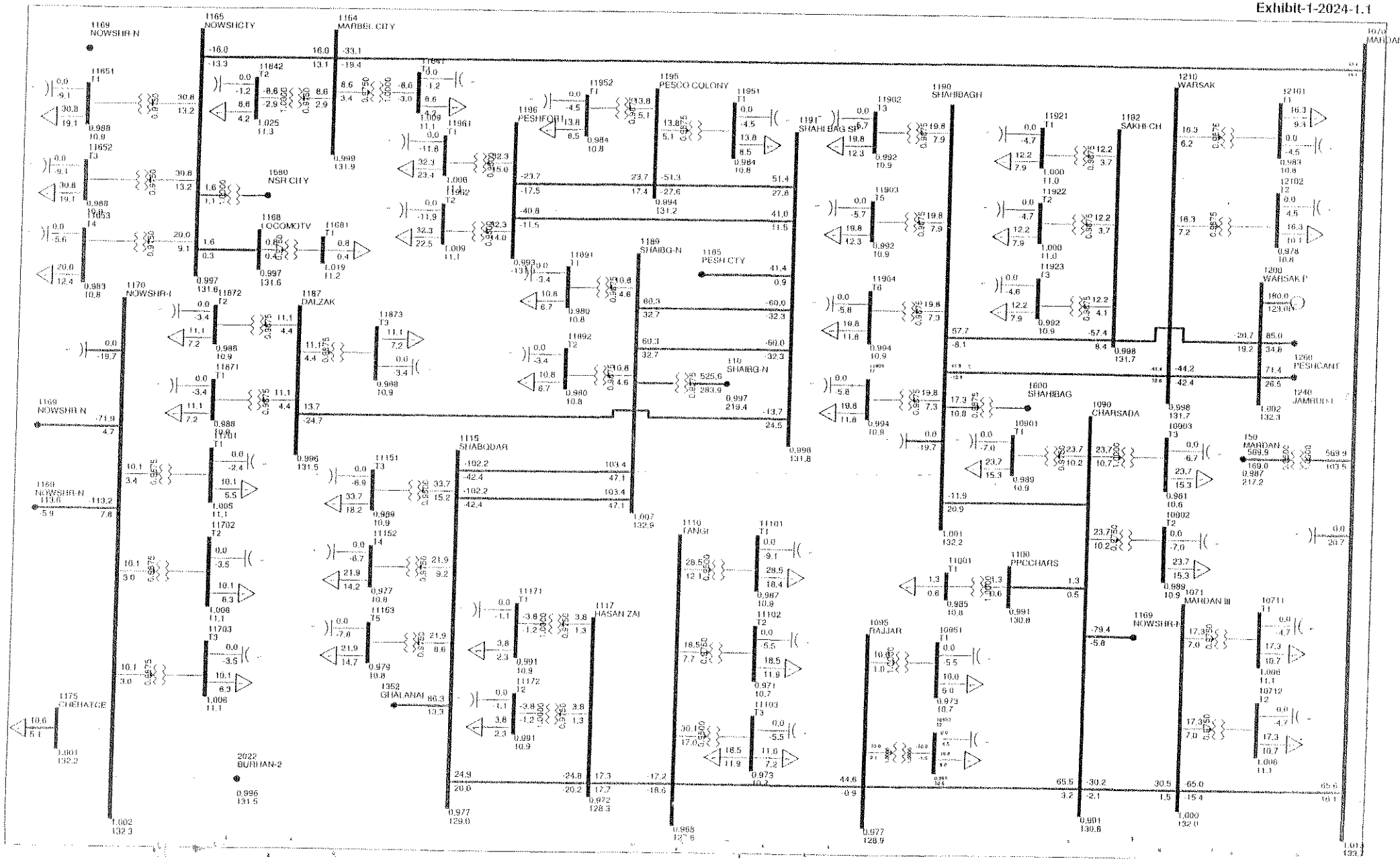

YEAR 2023-24: BASE CASE WITHOUT REINFORCEMENT

Exhibit-1-2024-1.2

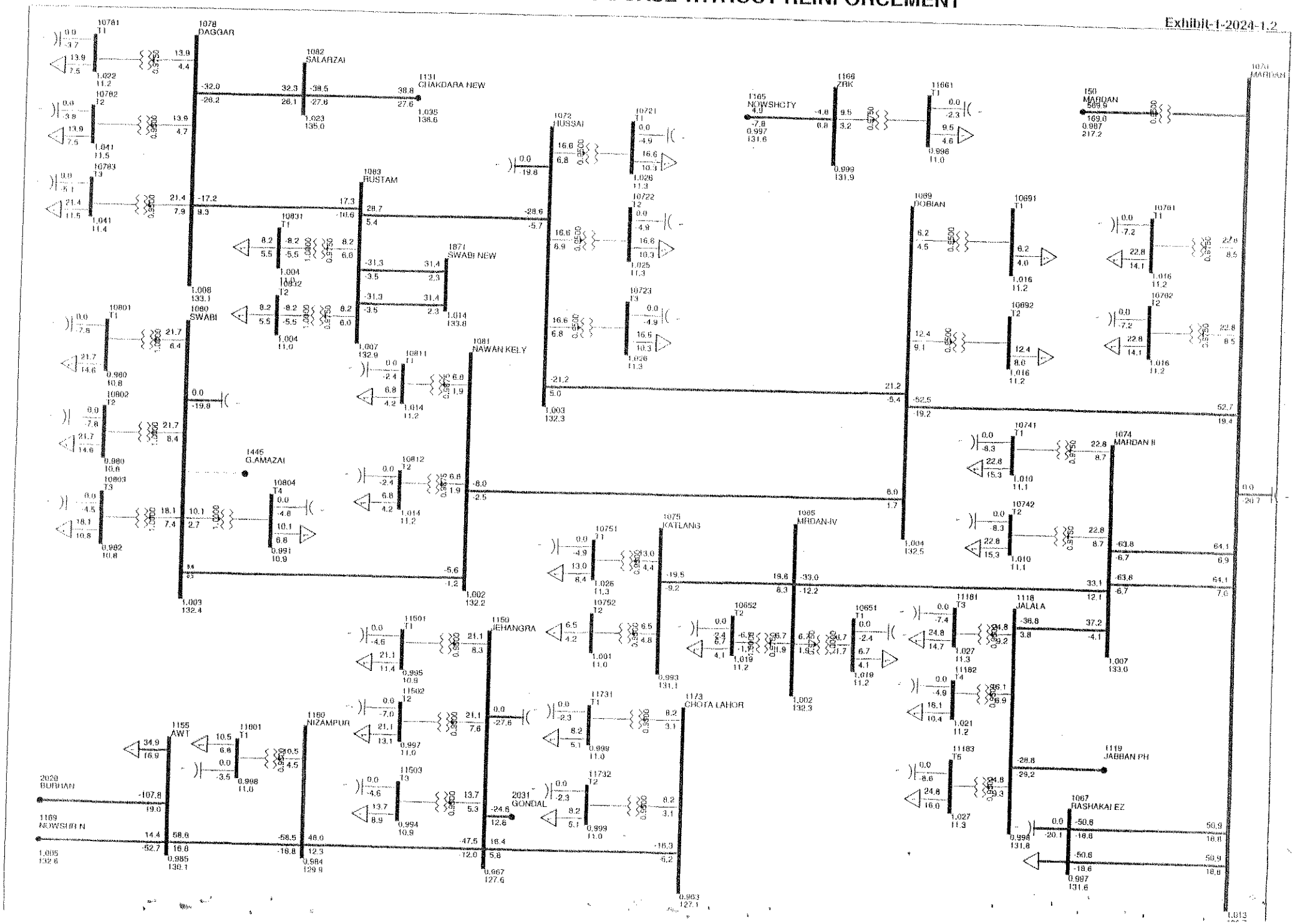

PESCO LOAD FLOW STUDY
YEAR 2023-24: BASE CASE WITHOUT REINFORCEMENT

Exhibit-I-2024-1.3

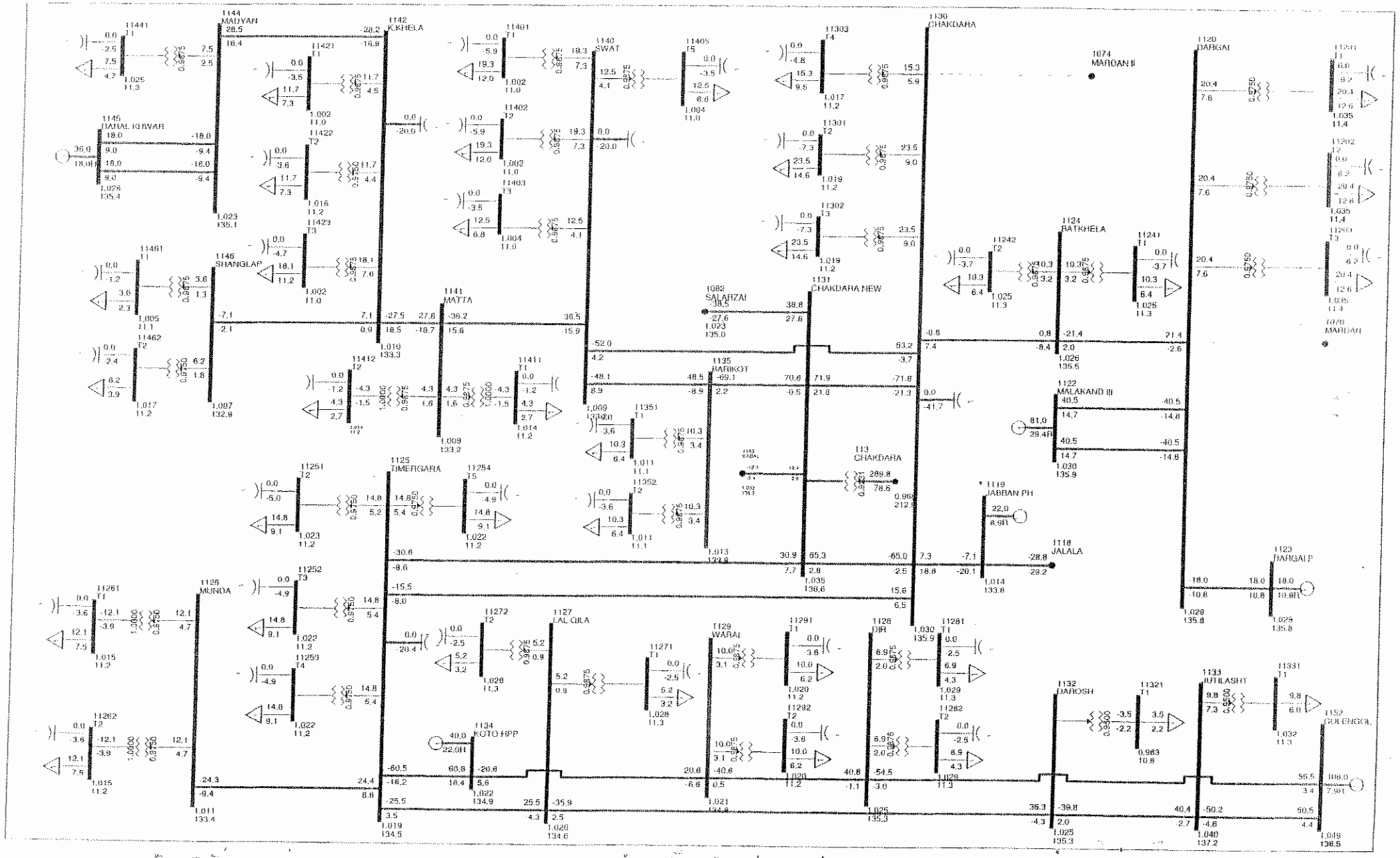

PESCO LOAD FLOW STUDY
YEAR 2022-23: BASE CASE WITHOUT REINFORCEMENT

Exhibit-2-2023-2.5

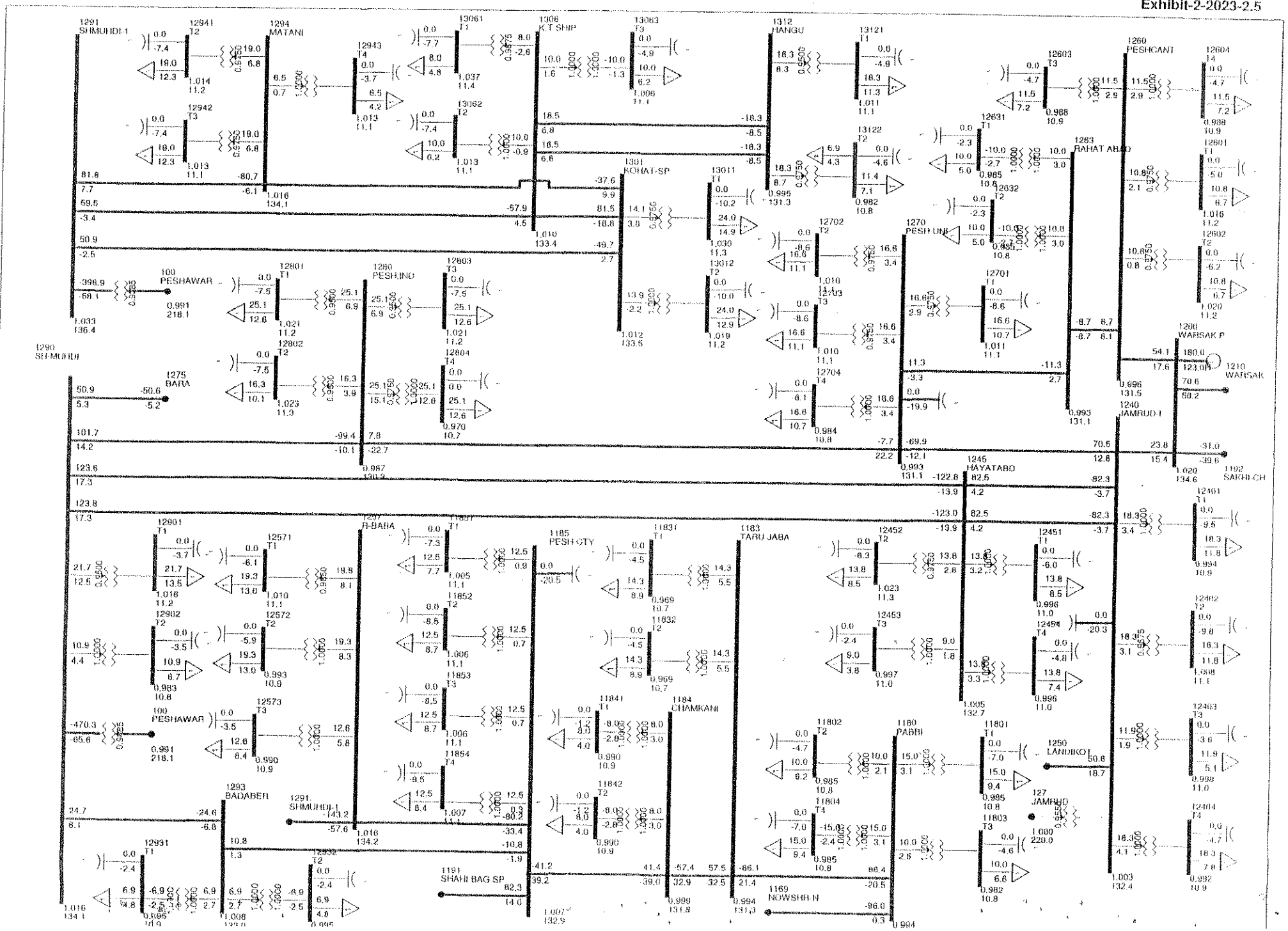

PESCO LOAD FLOW STUDY
YEAR 2022-23: BASE CASE WITHOUT REINFORCEMENT

Exhibit-2-2023-2.6

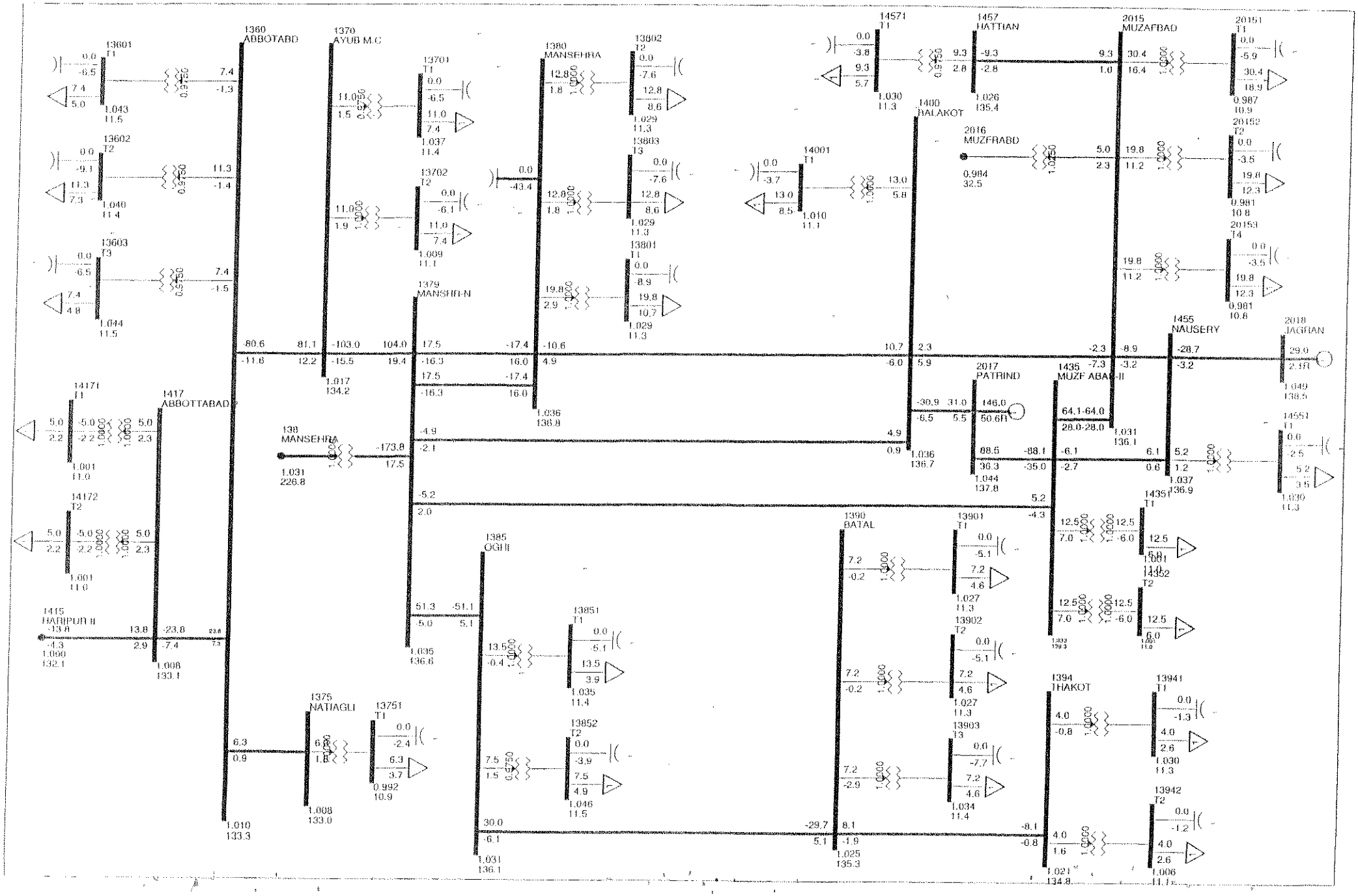

YEAR 2022-23: BASE CASE WITH REINFORCEMENT

Exhibit-2-2023-2.7

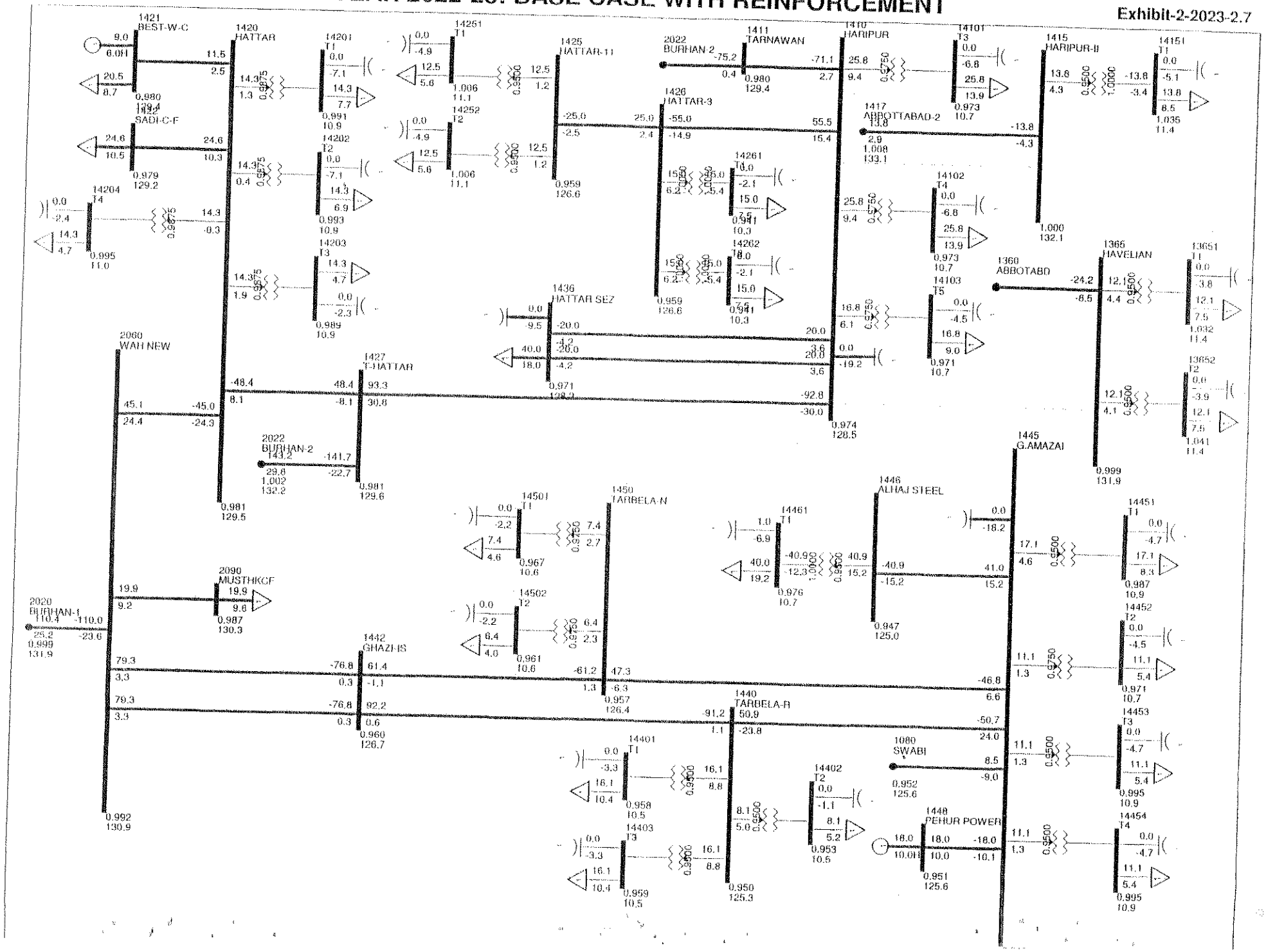

PESCO LOAD FLOW STUDY
YEAR 2023-24: BASE CASE WITH REINFORCEMENT

Exhibit-1-2024-2.1

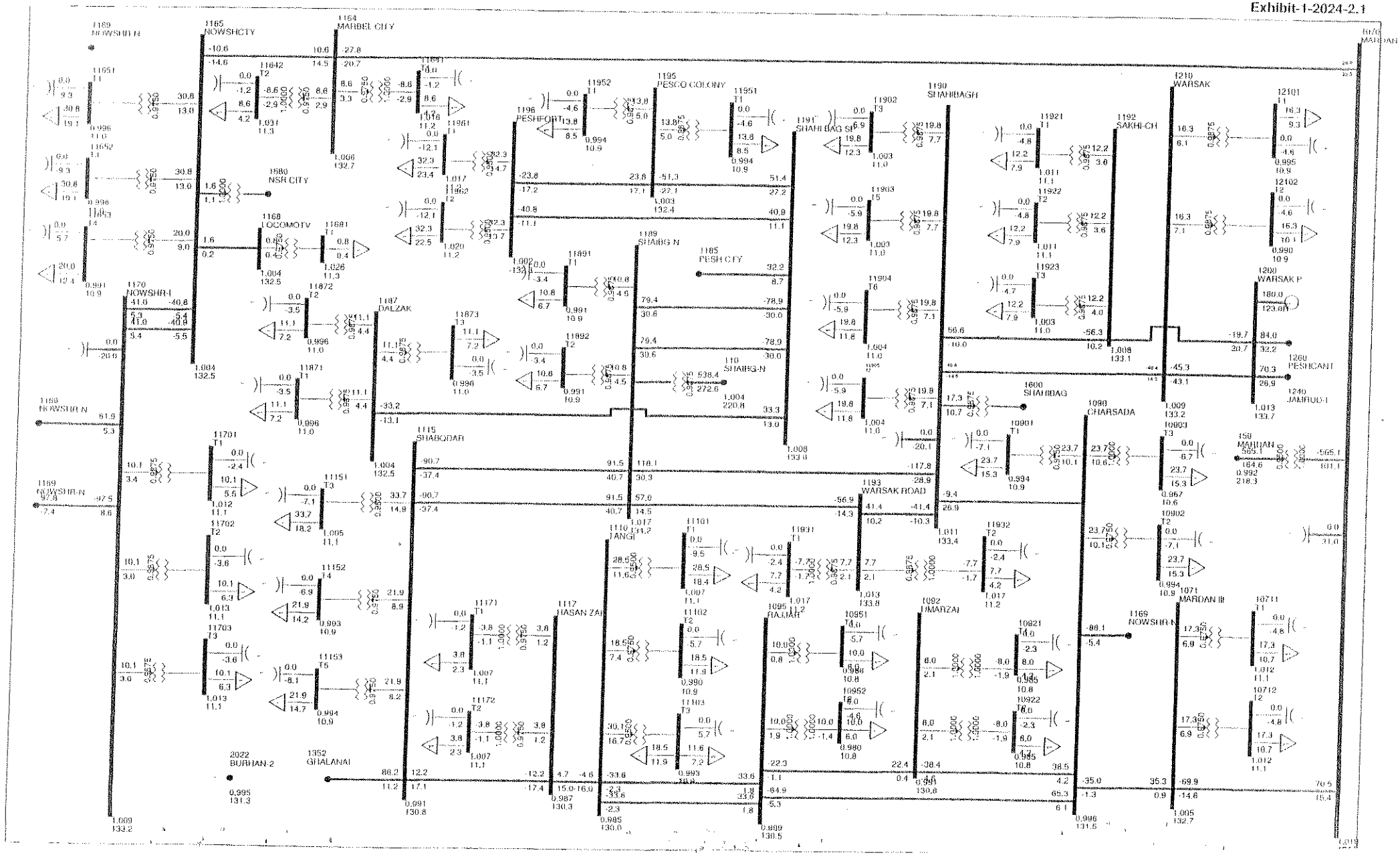

YEAR 2023-24: BASE CASE WITH REINFORCEMENT

Exhibit-1-2024-2.2

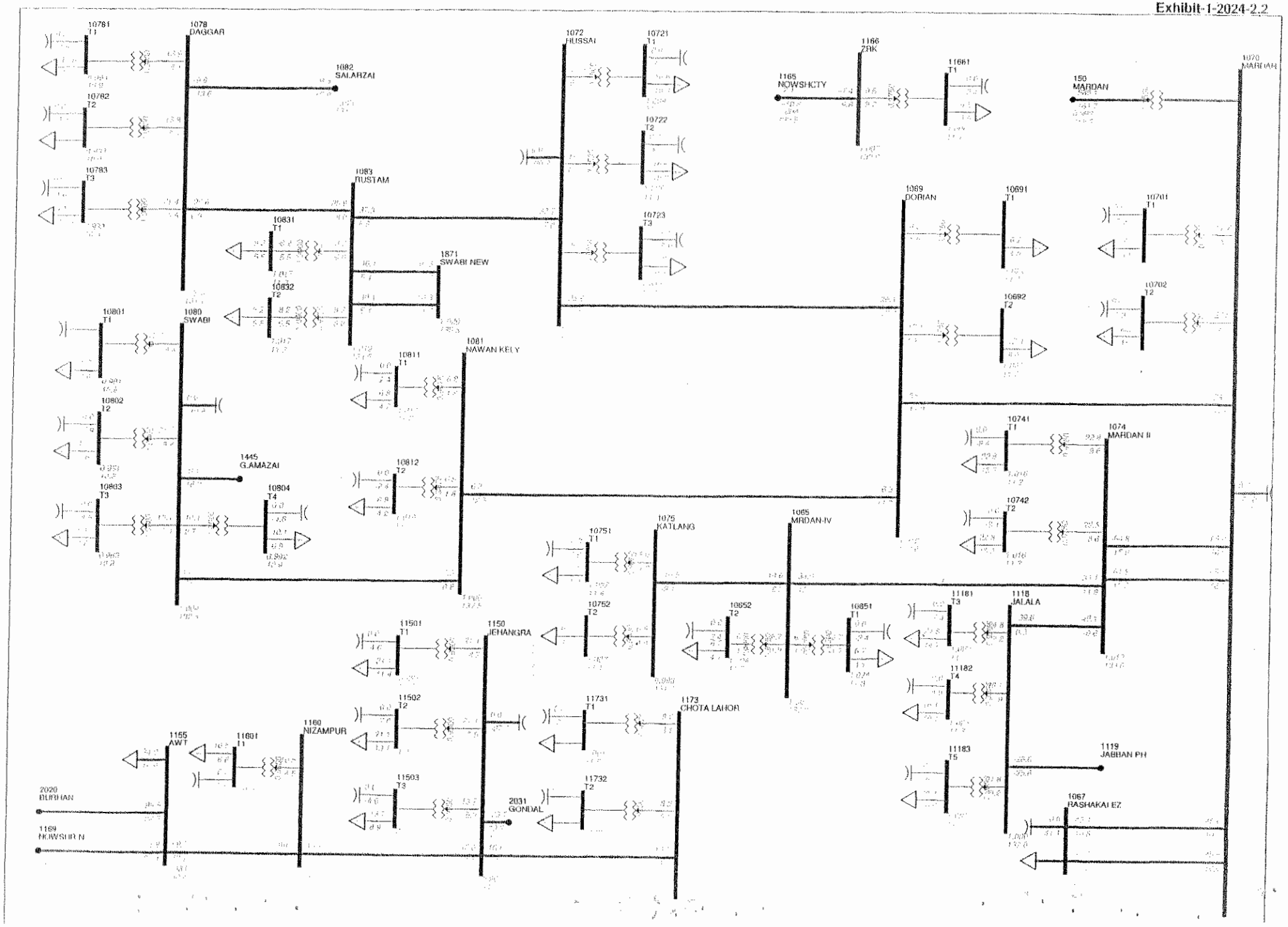

PESCO LOAD FLOW STUDY
YEAR 2023-24: BASE CASE WITH REINFORCEMENT

Exhibit-1-2024-2.3

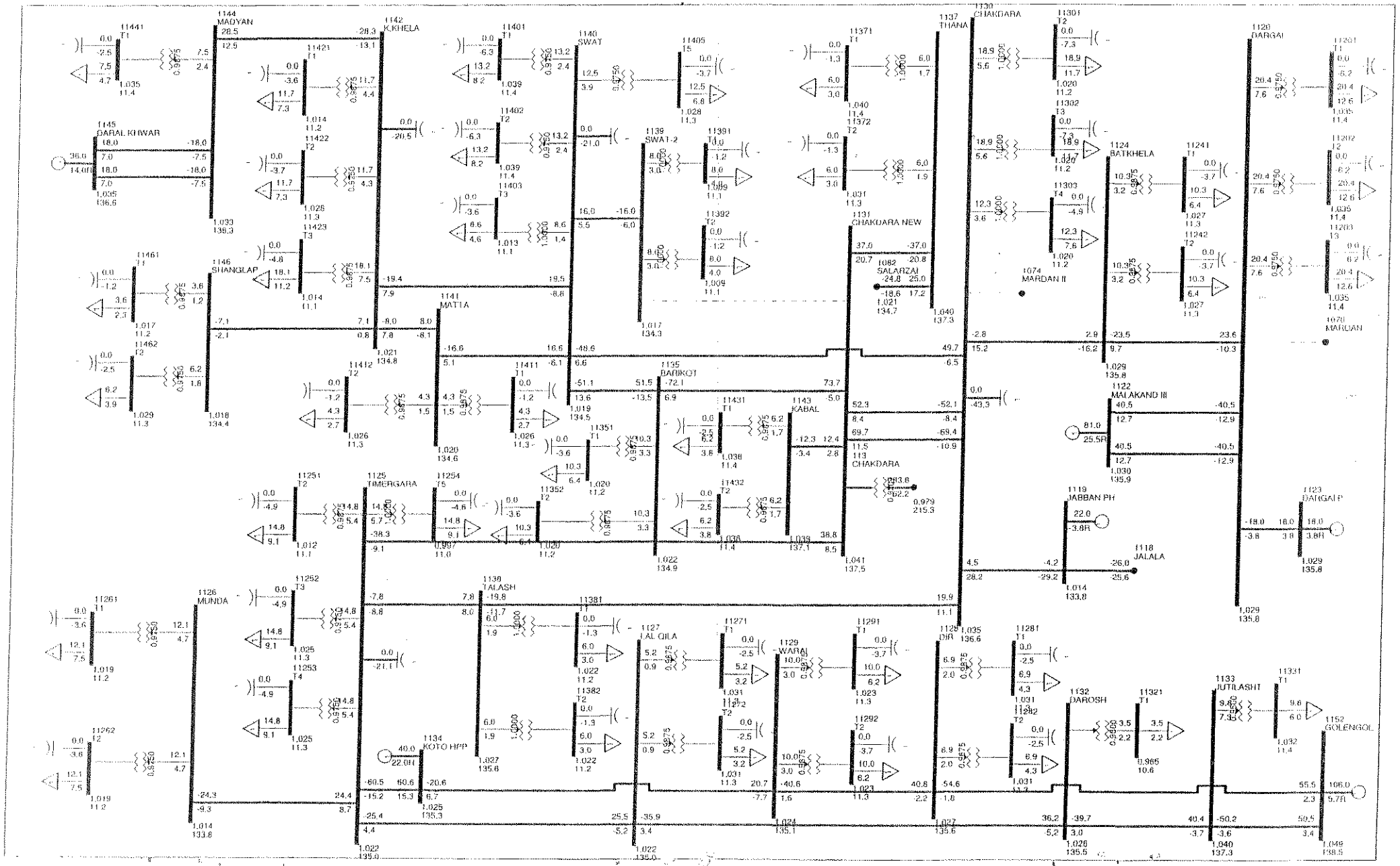

PESCO LOAD FLOW STUDY
YEAR 2022-23: BASE CASE WITHOUT REINFORCEMENT

Exhibit-1-2023-1.4

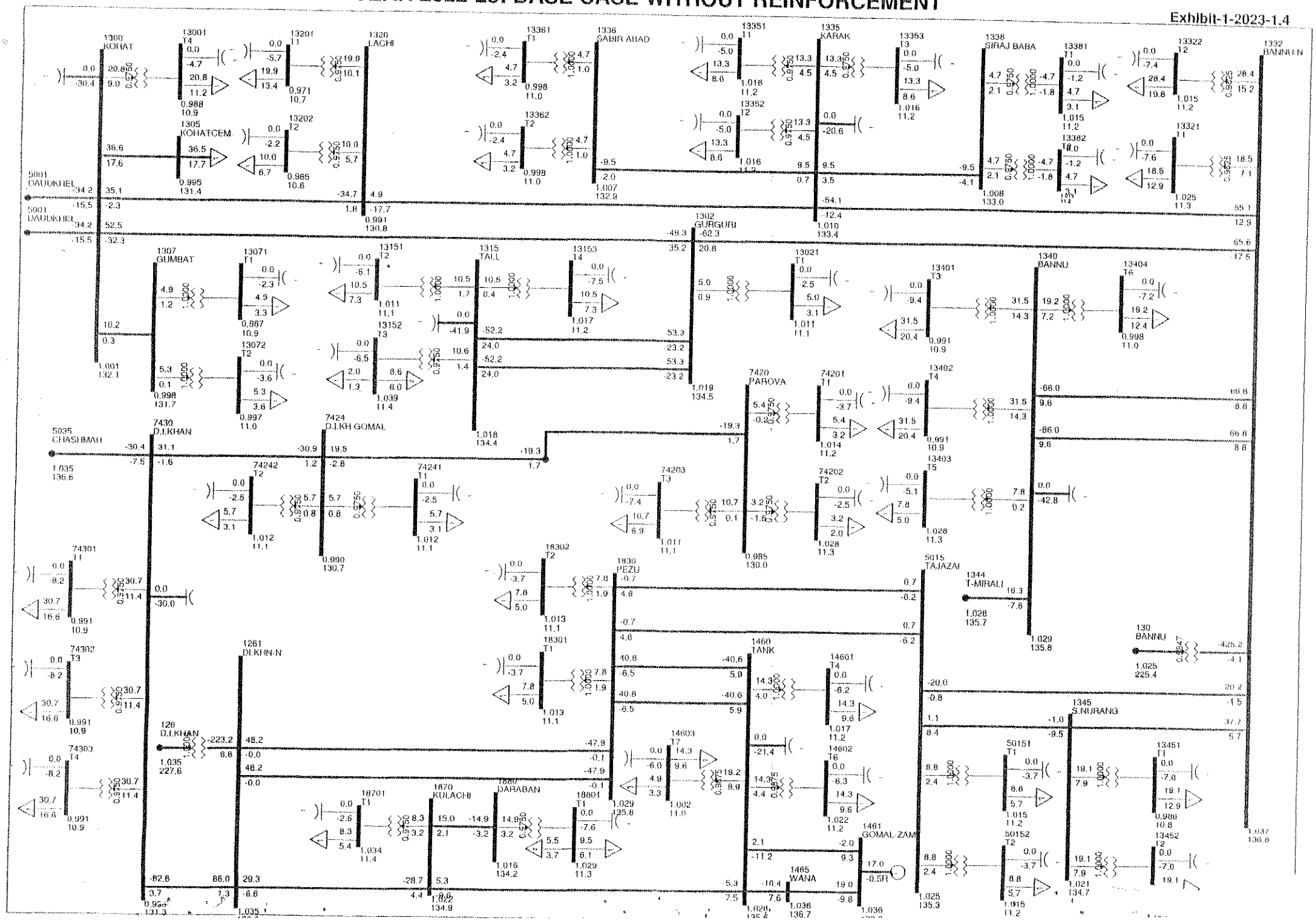

PESCO LOAD FLOW STUDY
YEAR 2022-23: BASE CASE WITHOUT REINFORCEMENT

Exhibit-1-2023-1.5

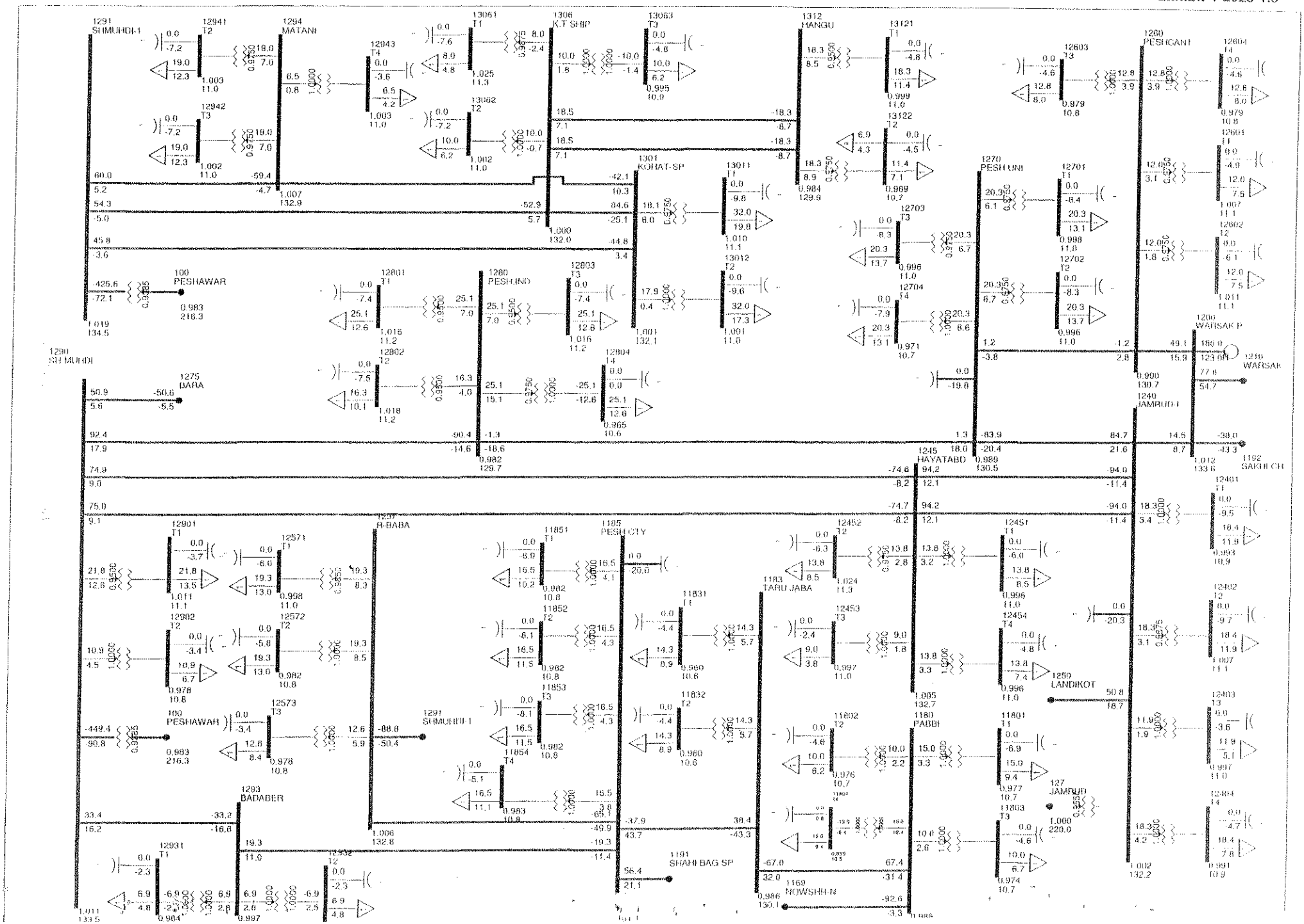

PESCO LOAD FLOW STUDY
YEAR 2022-23: BASE CASE WITHOUT REINFORCEMENT

Exhibit-1-2023-1.6

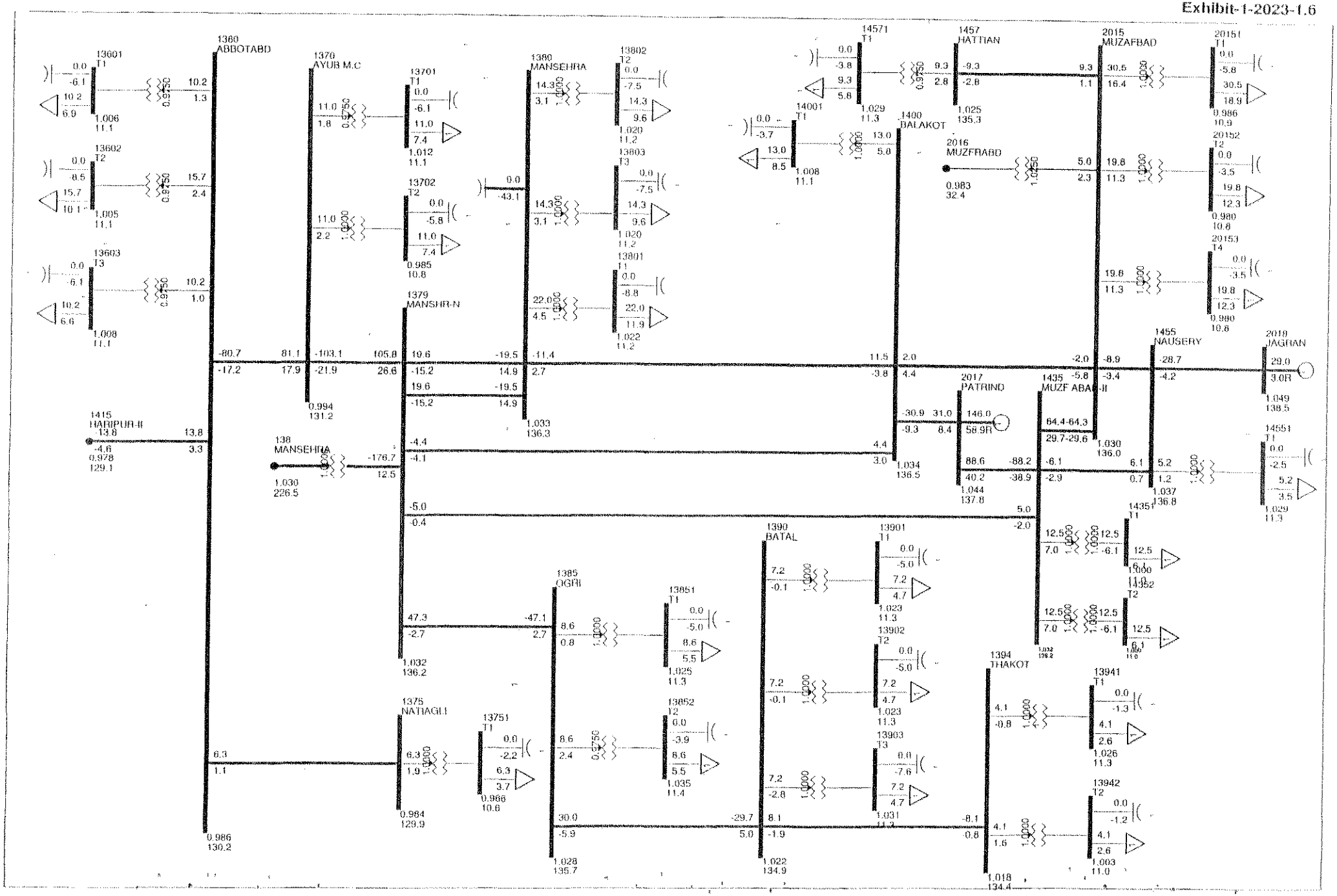

PESCO LOAD FLOW STUDY
YEAR 2022-23: BASE CASE WITHOUT REINFORCEMENT

Exhibit-1-2023-1.7

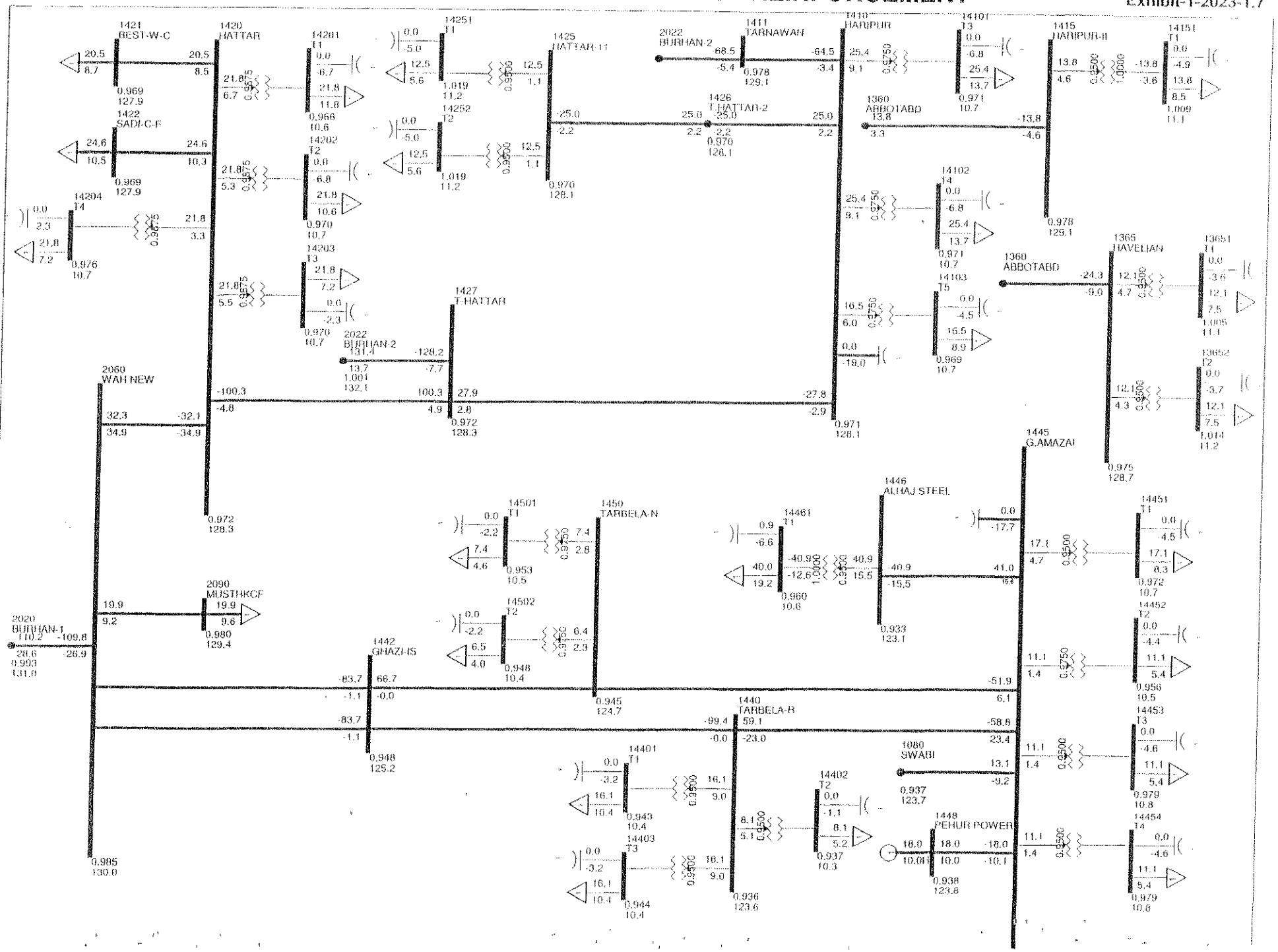

PESCO LOAD FLOW STUDY
YEAR 2022-23: BASE CASE WITH REINFORCEMENT

Exhibit-2-2023-2.1

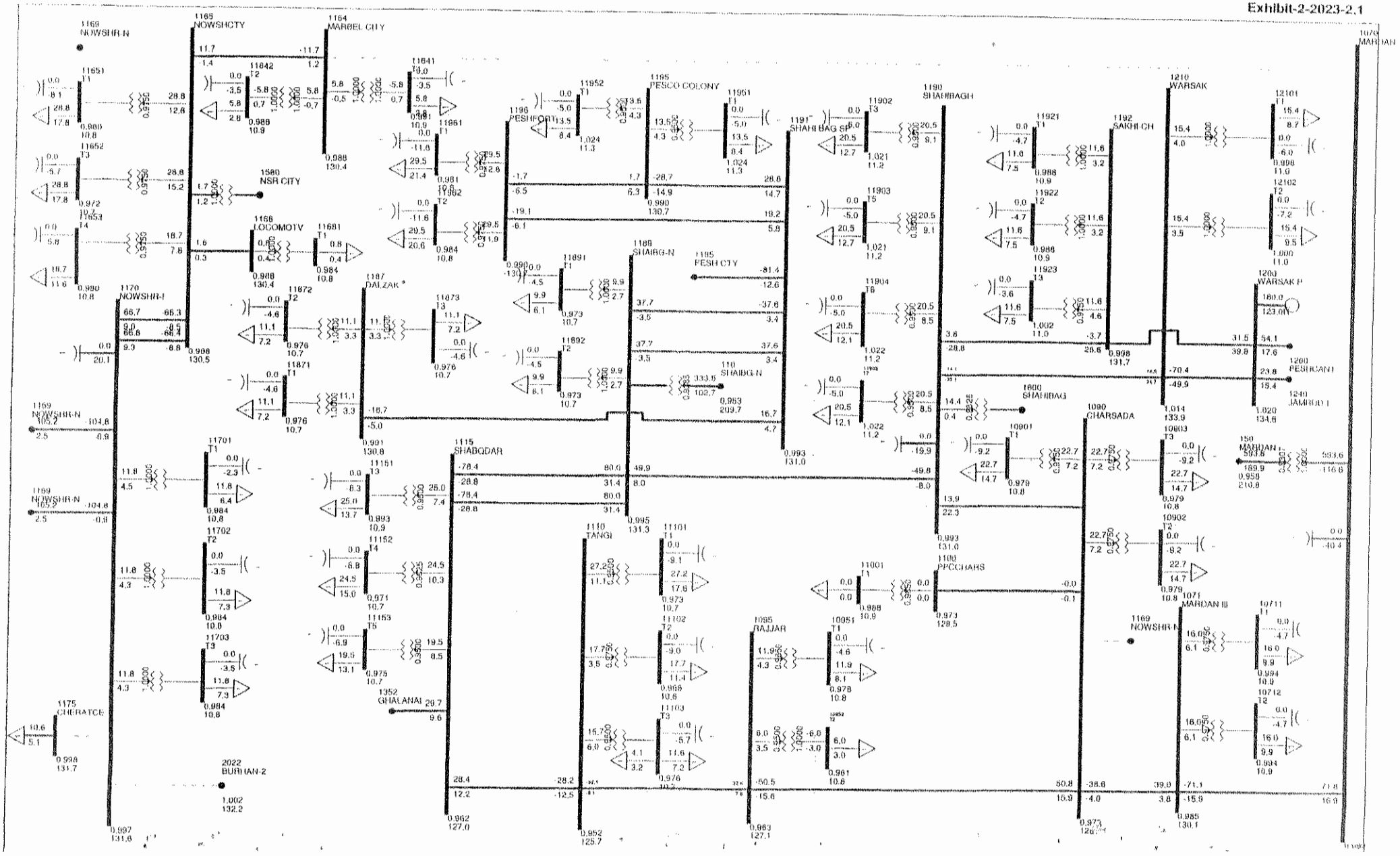

PESCO LOAD FLOW STUDY
YEAR 2022-23: BASE CASE WITH REINFORCEMENT

Exhibit-2-2023-2.2

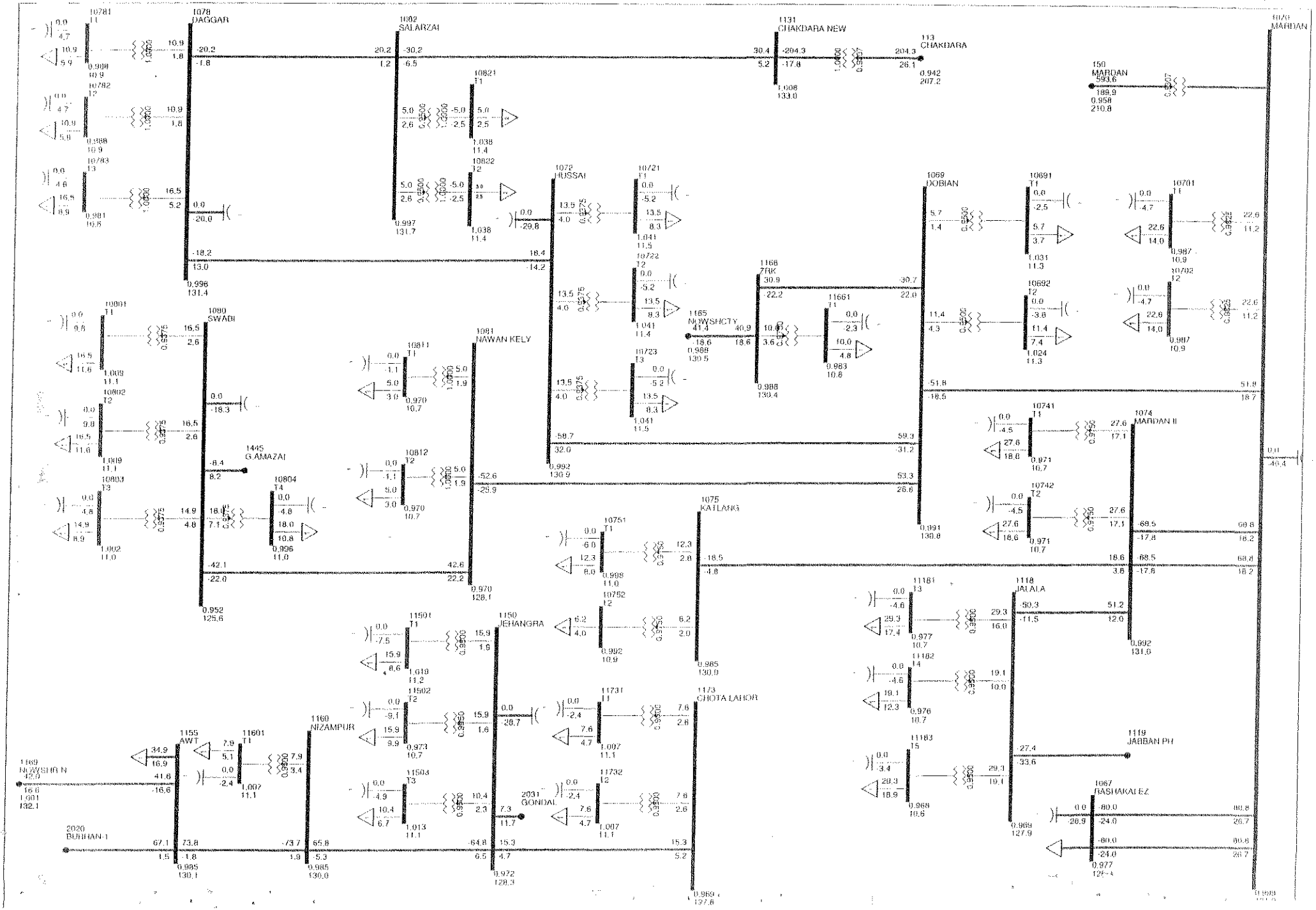

PESCO LOAD FLOW STUDY
YEAR 2022-23: BASE CASE WITH REINFORCEMENT

Exhibit-2-2023-2.3

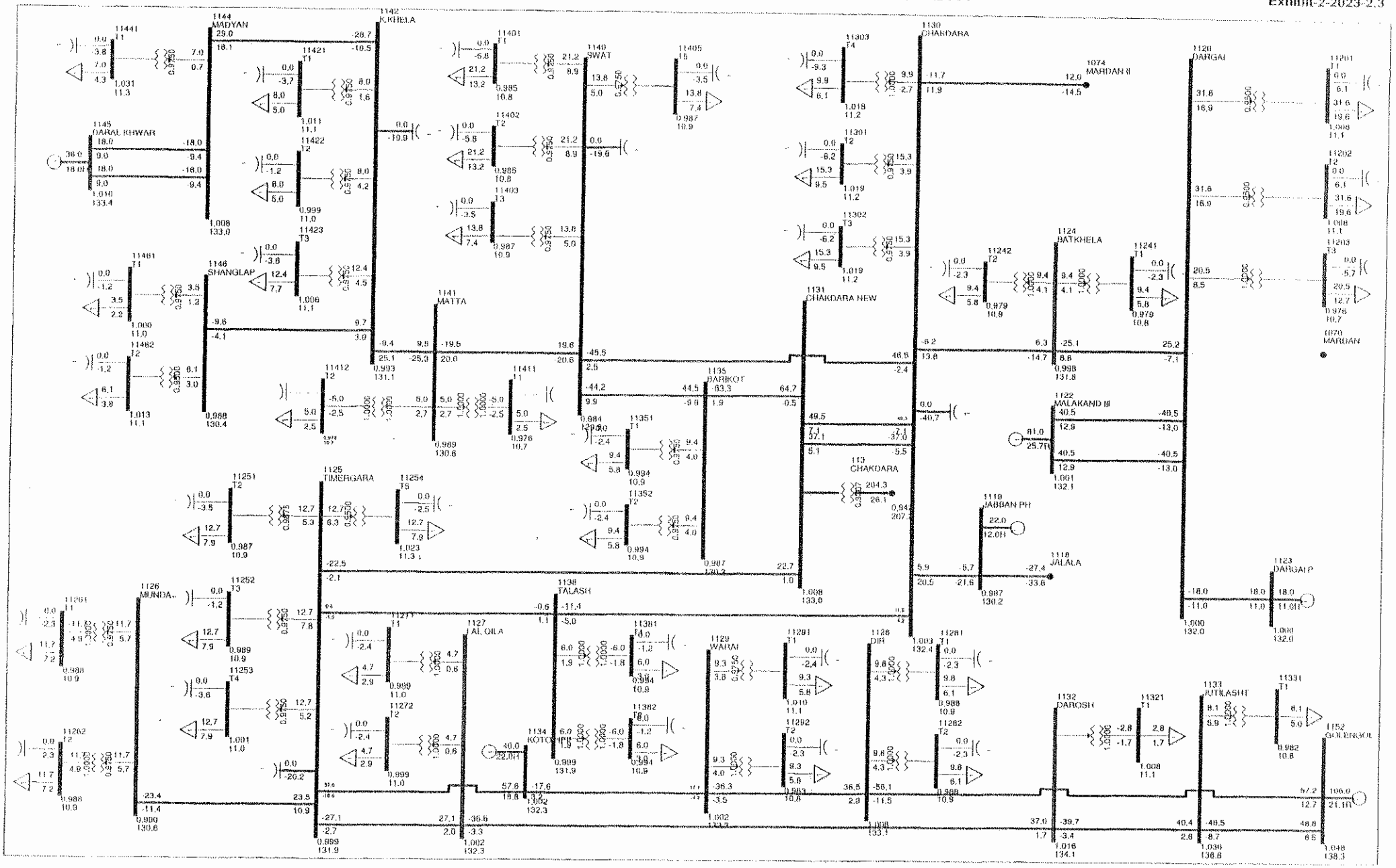

PESCO LOAD FLOW STUDY
YEAR 2022-23: BASE CASE WITH REINFORCEMENT

Exhibit-2-2023-2.4

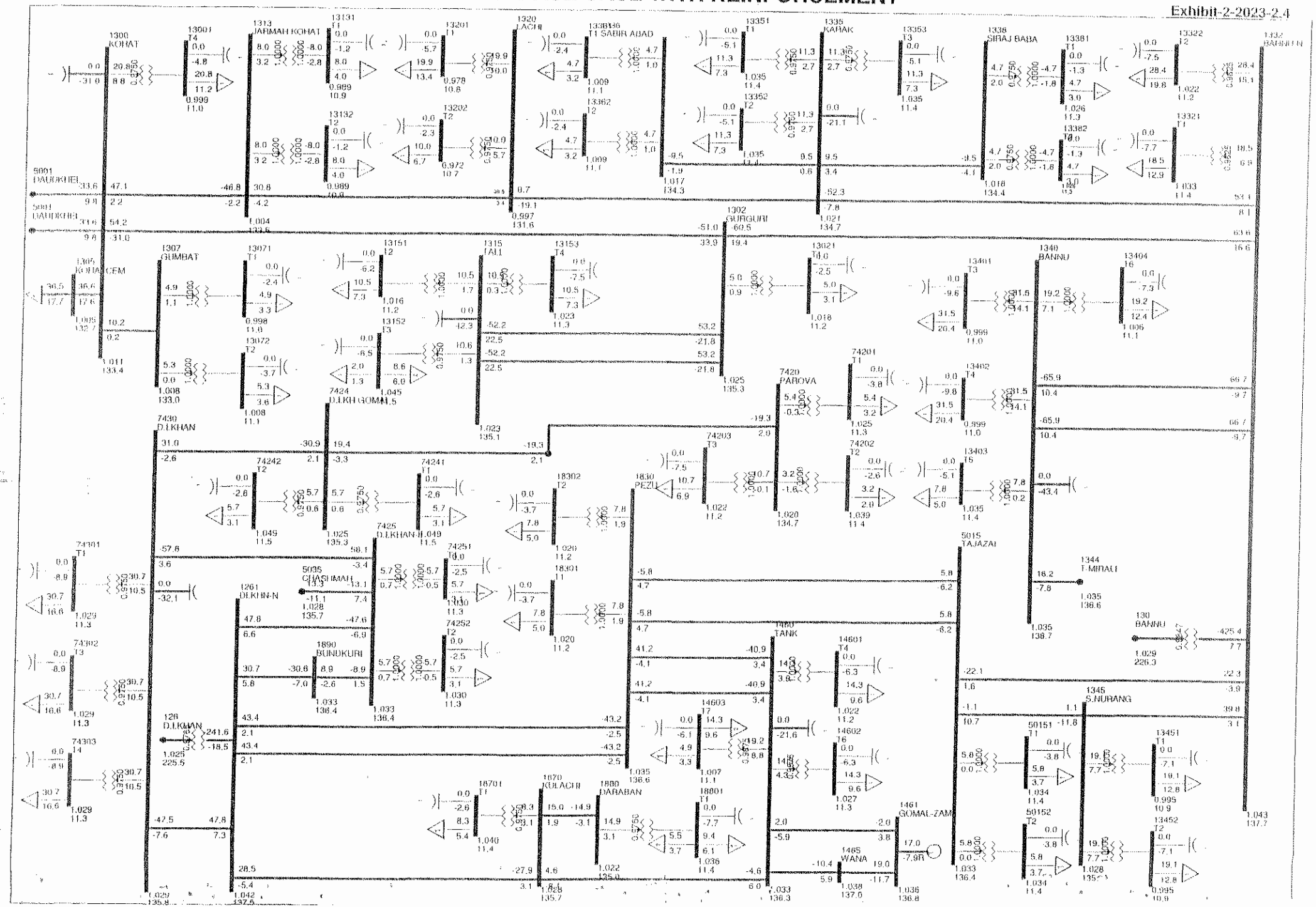

PESCO LOAD FLOW STUDY
YEAR 2021-22: BASE CASE WITH REINFORCEMENT

Exhibit-2-2022-2.3

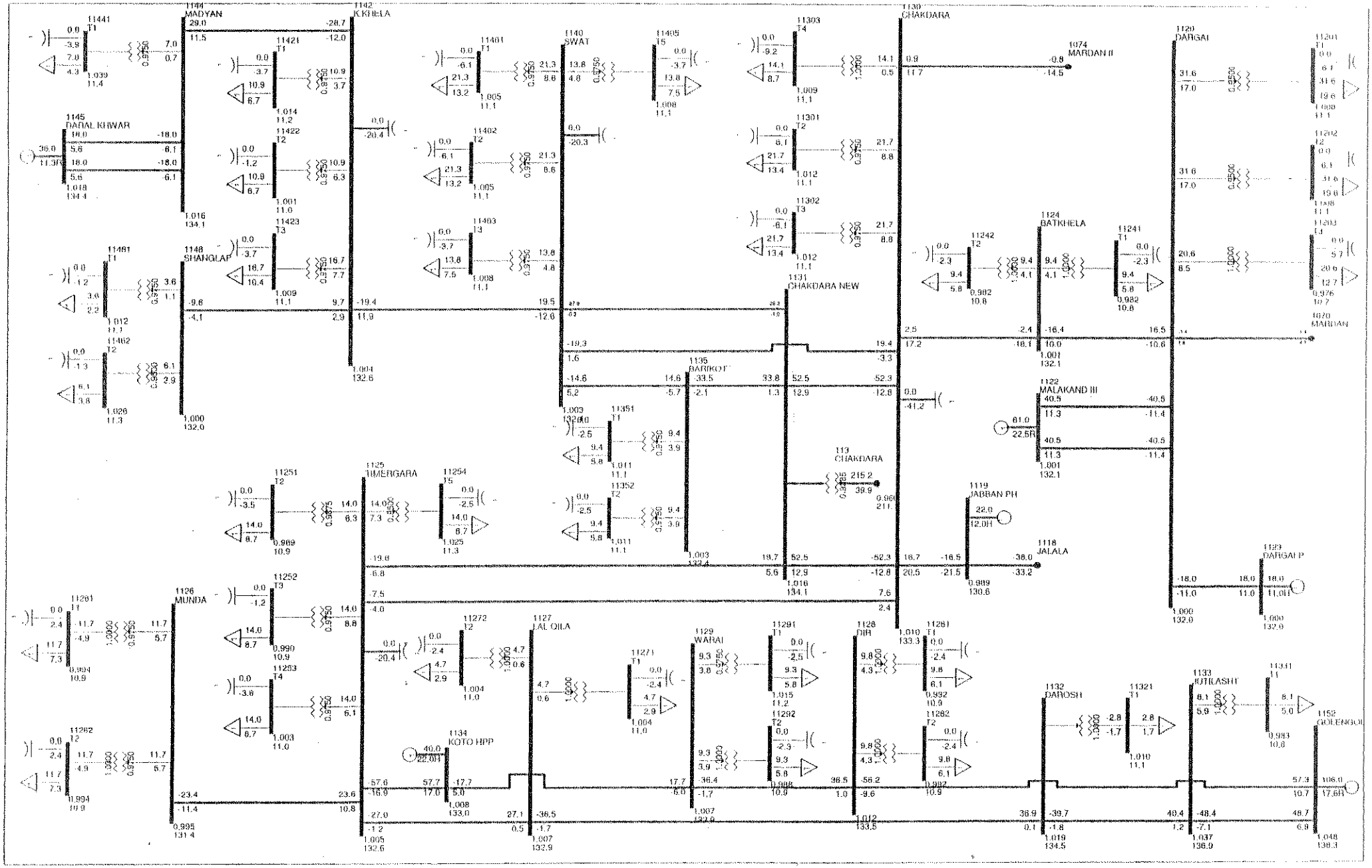

PESCO LOAD FLOW STUDY
YEAR 2021-22: BASE CASE WITH REINFORCEMENT

Exhibit-2-2022-2.4

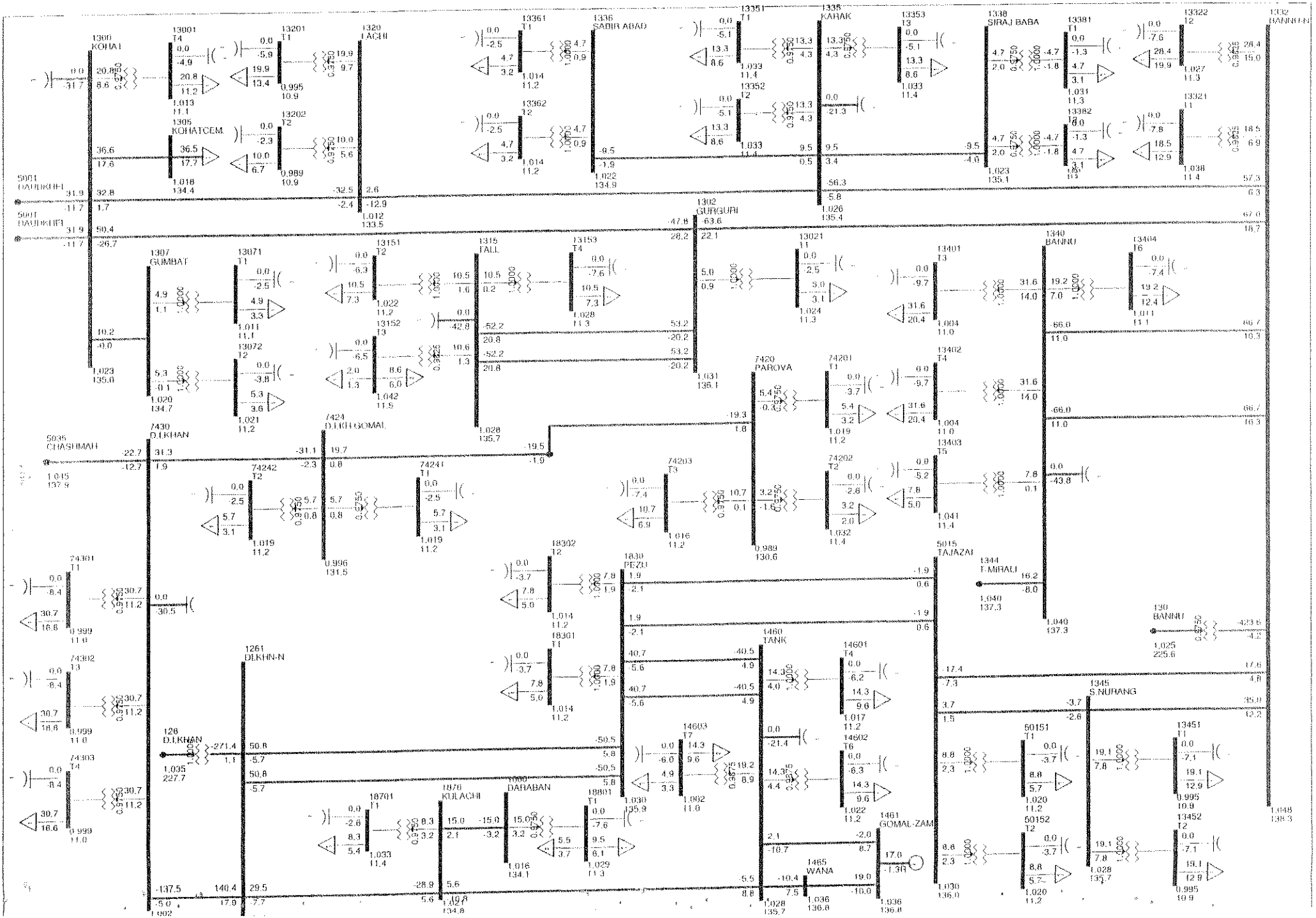

PESCO LOAD FLOW STUDY
YEAR 2021-22: BASE CASE WITH REINFORCEMENT

Exhibit-2-2022-2.5

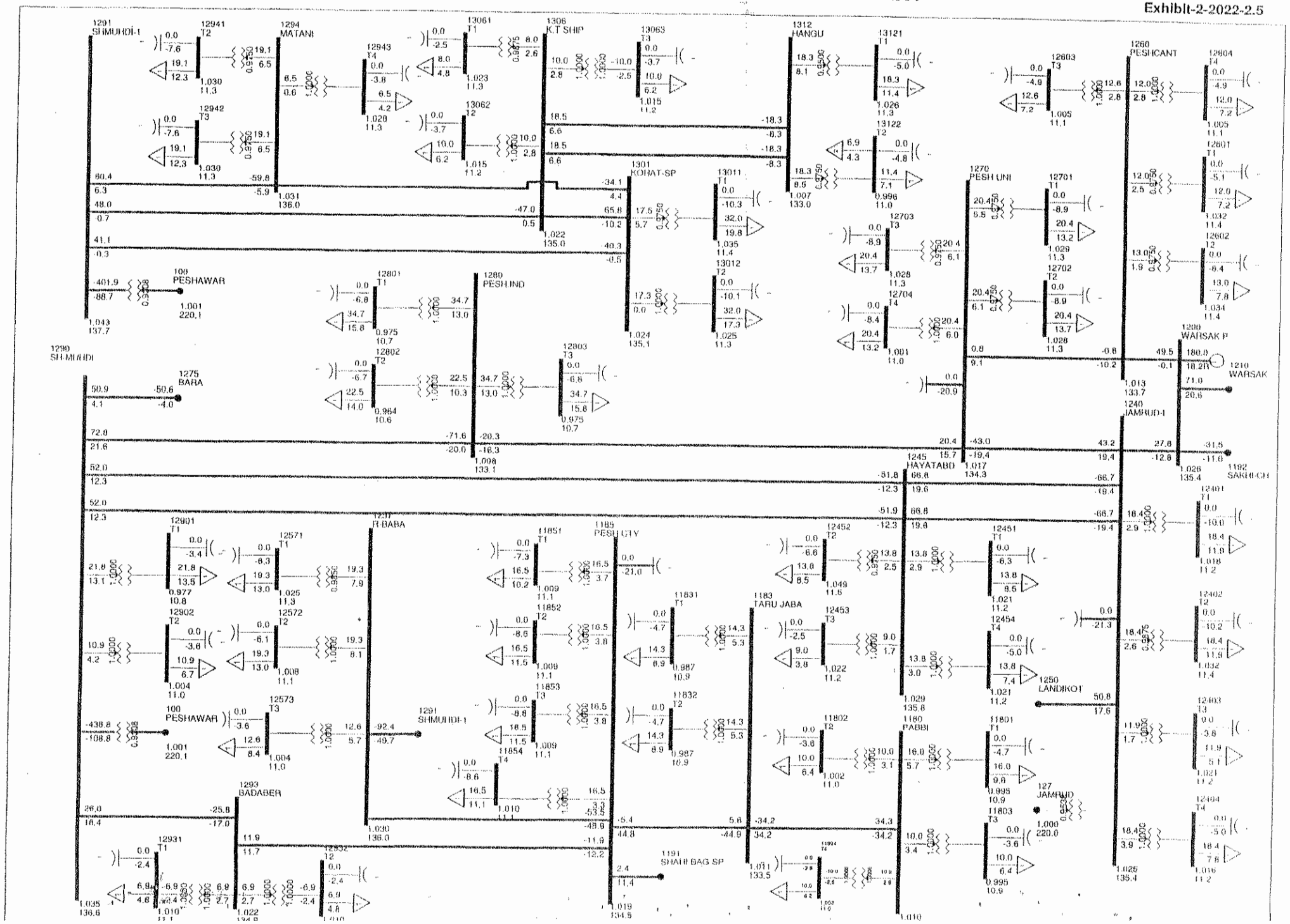

PESCO LOAD FLOW STUDY
YEAR 2021-22: BASE CASE WITH REINFORCEMENT

Exhibit-2-2022-2.6

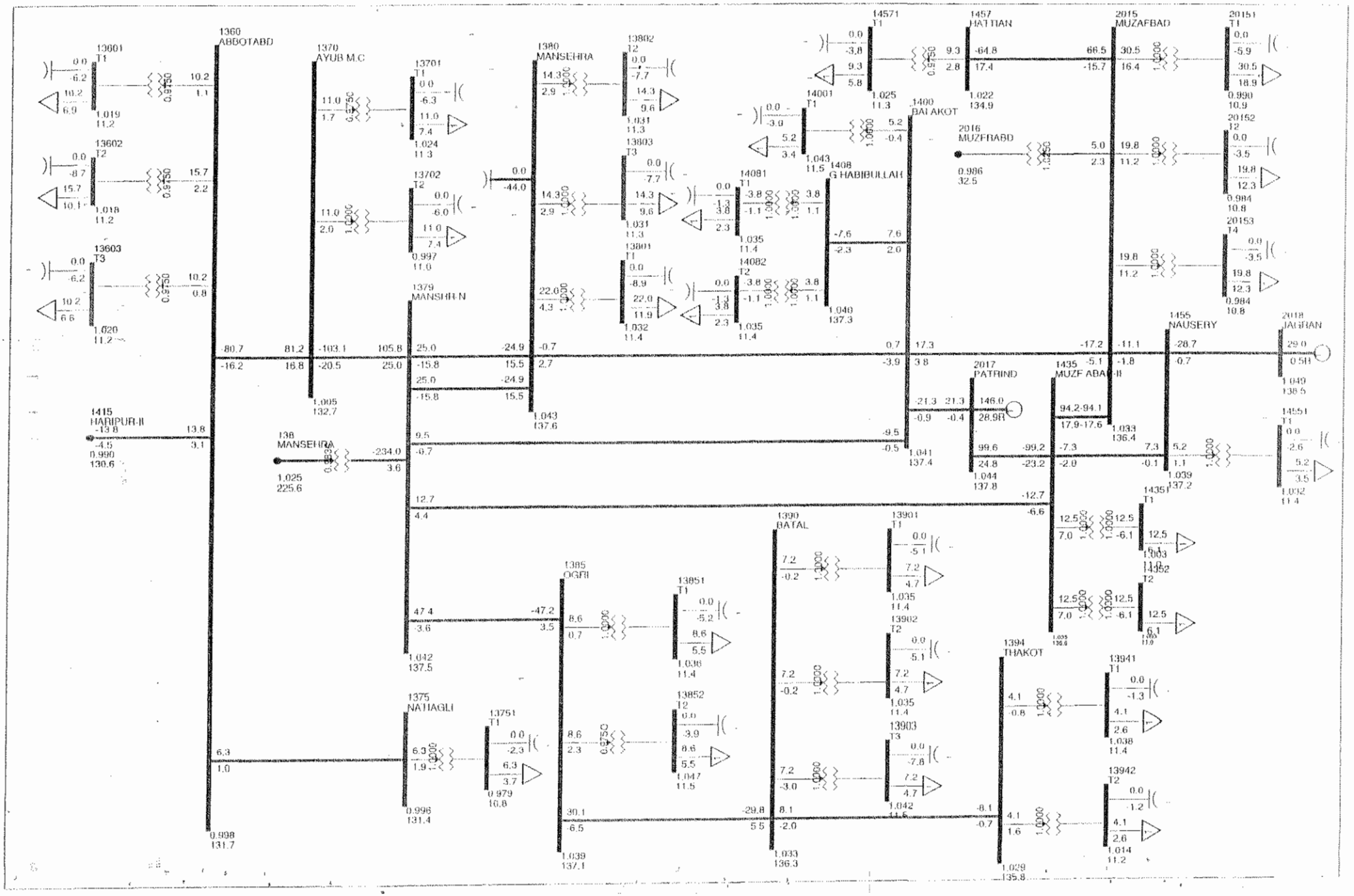

PESCO LOAD FLOW STUDY
YEAR 2021-22: BASE CASE WITH REINFORCEMENT

Exhibit-1-2022-2.7

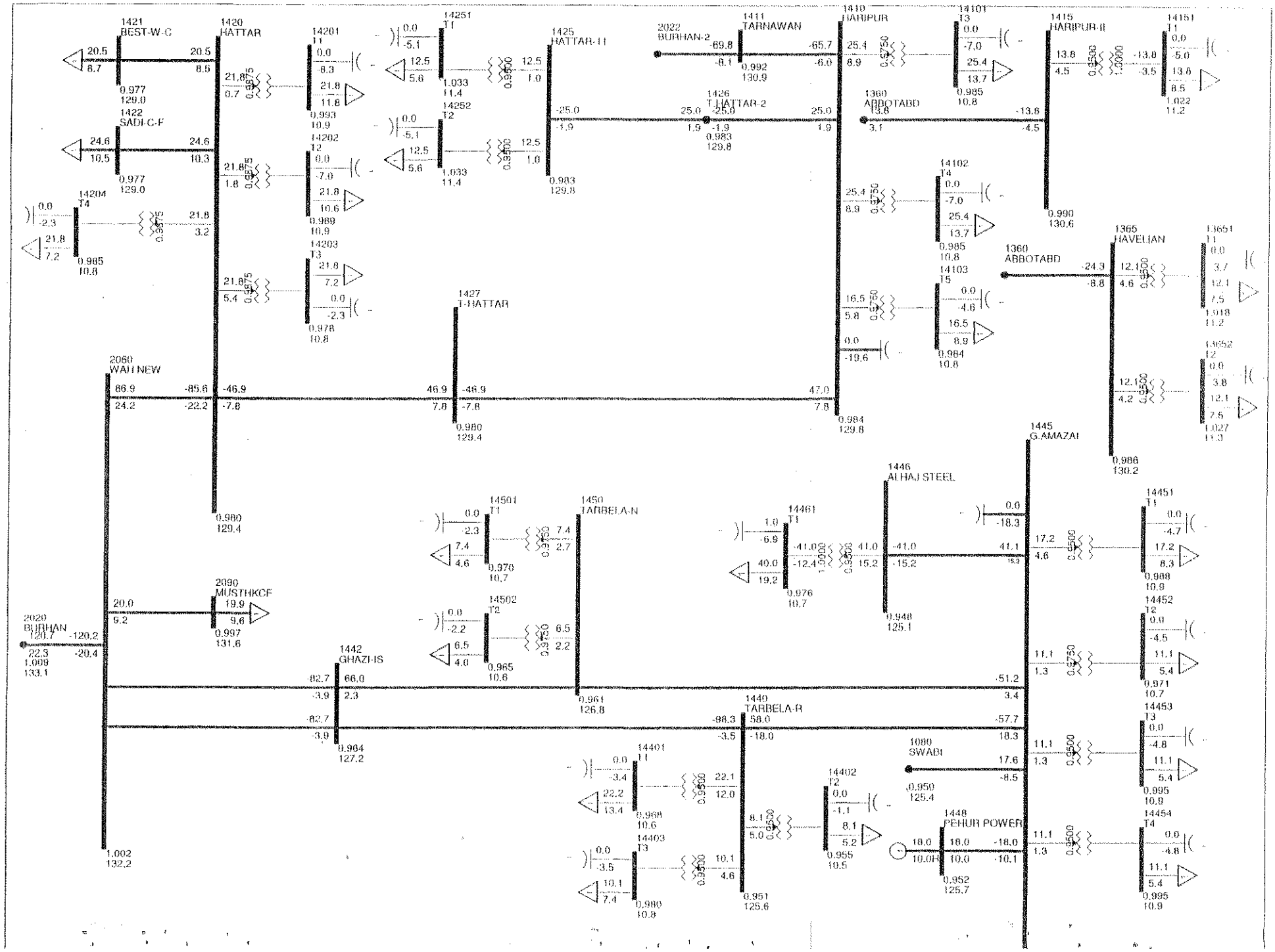

PESCO LOAD FLOW STUDY
YEAR 2022-23: BASE CASE WITHOUT REINFORCEMENT

Exhibit-1-2022-23-1.1

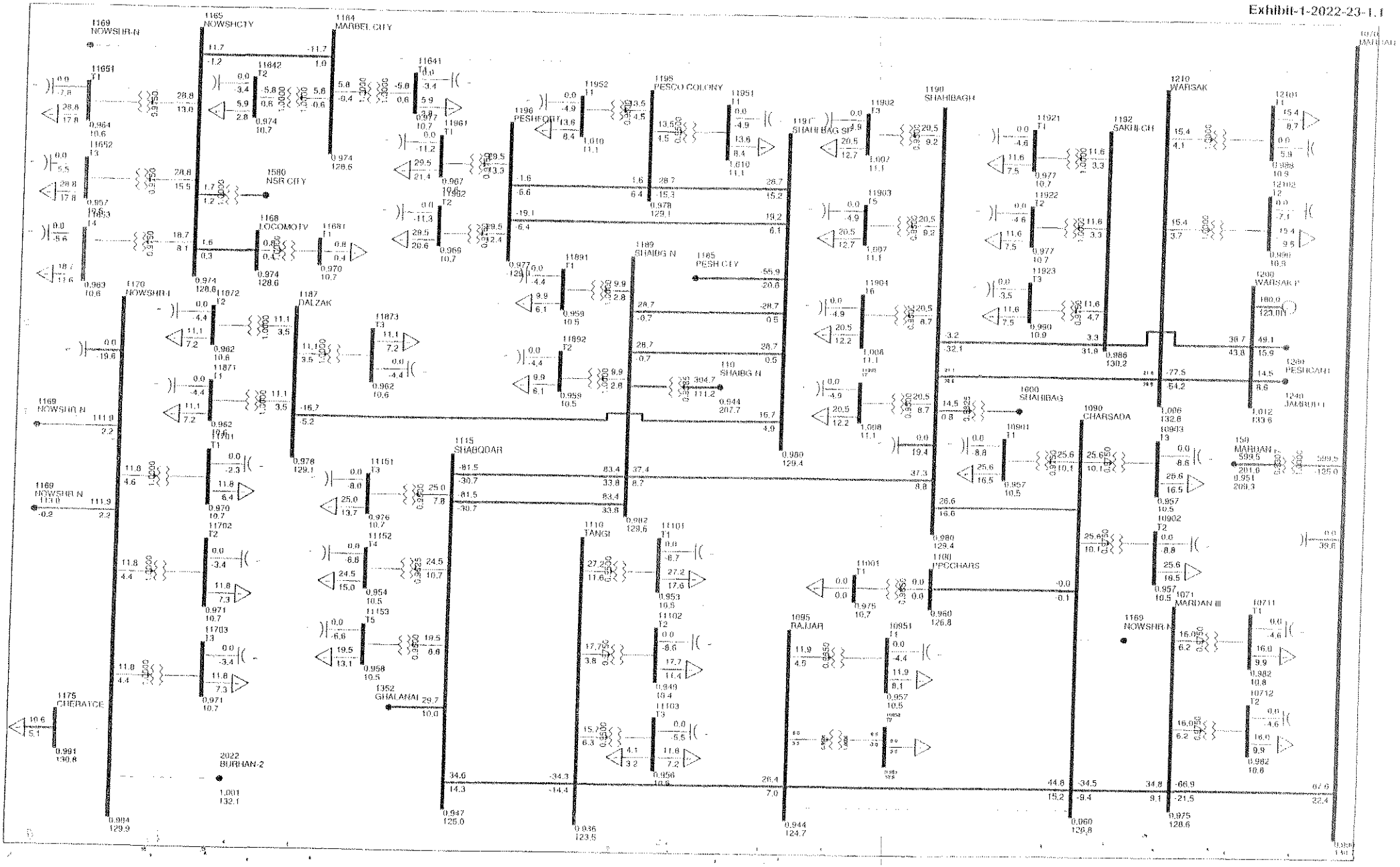

PESCO LOAD FLOW STUDY
YEAR 2022-23: BASE CASE WITHOUT REINFORCEMENT

Exhibit-1-2023-1.2

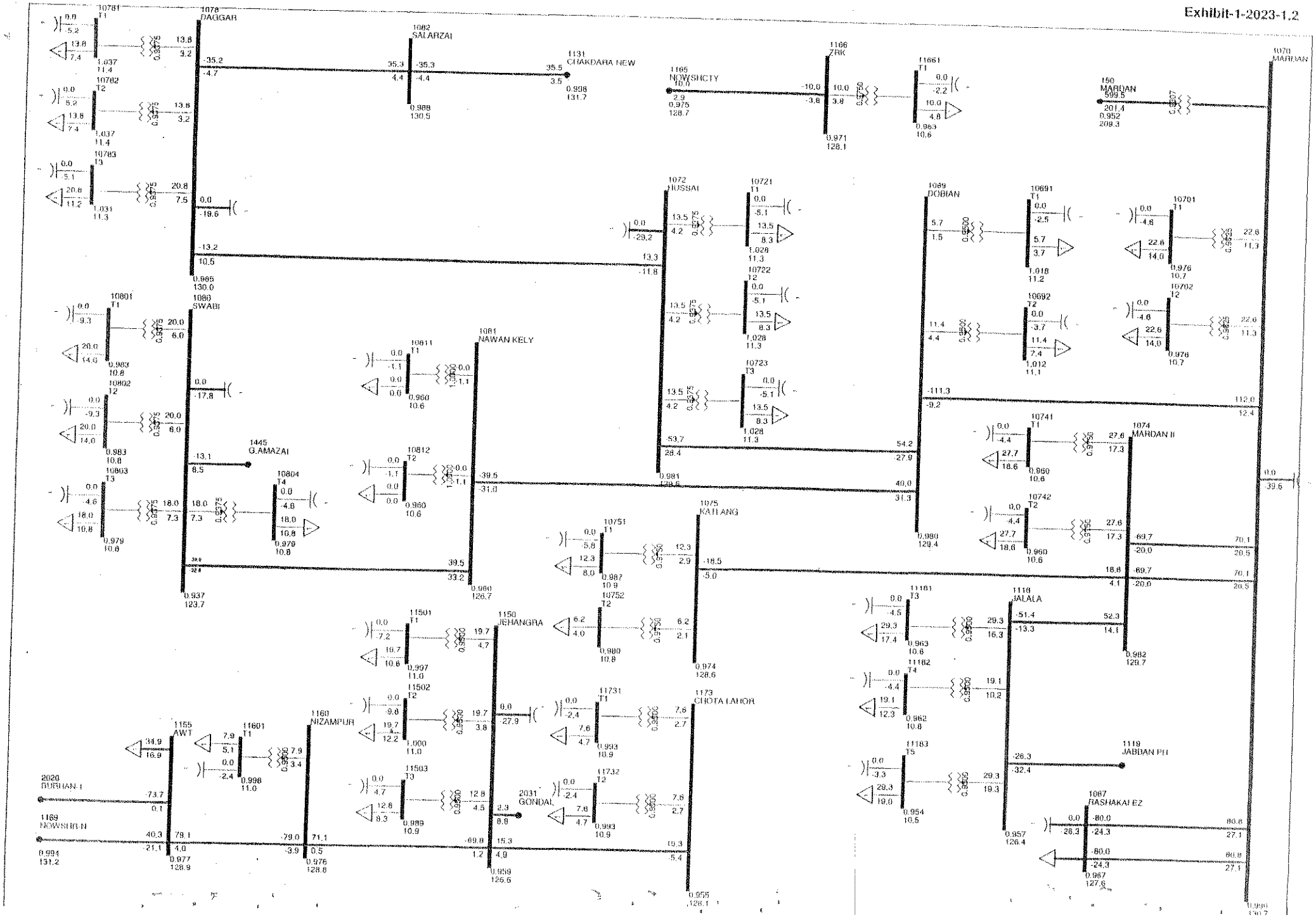

PESCO LOAD FLOW STUDY
YEAR 2022-23: BASE CASE WITHOUT REINFORCEMENT

Exhibit-1-2023-1.3

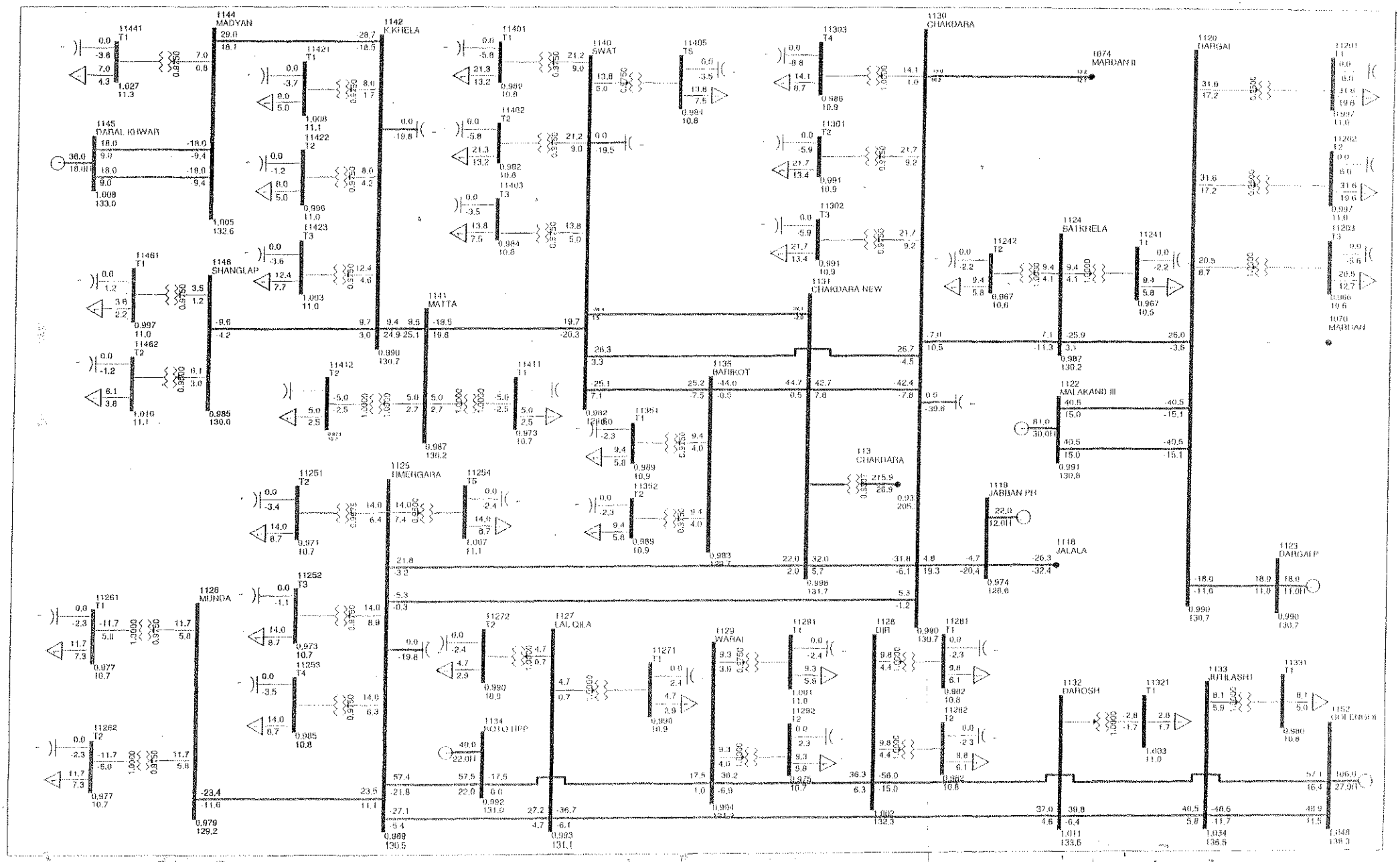

PESCO LOAD FLOW STUDY
YEAR 2022-23: BASE CASE WITH 220/132 KV GRID STATIONS SWABI CONNECTIVITY

Exhibit-1-2022-23-2.2

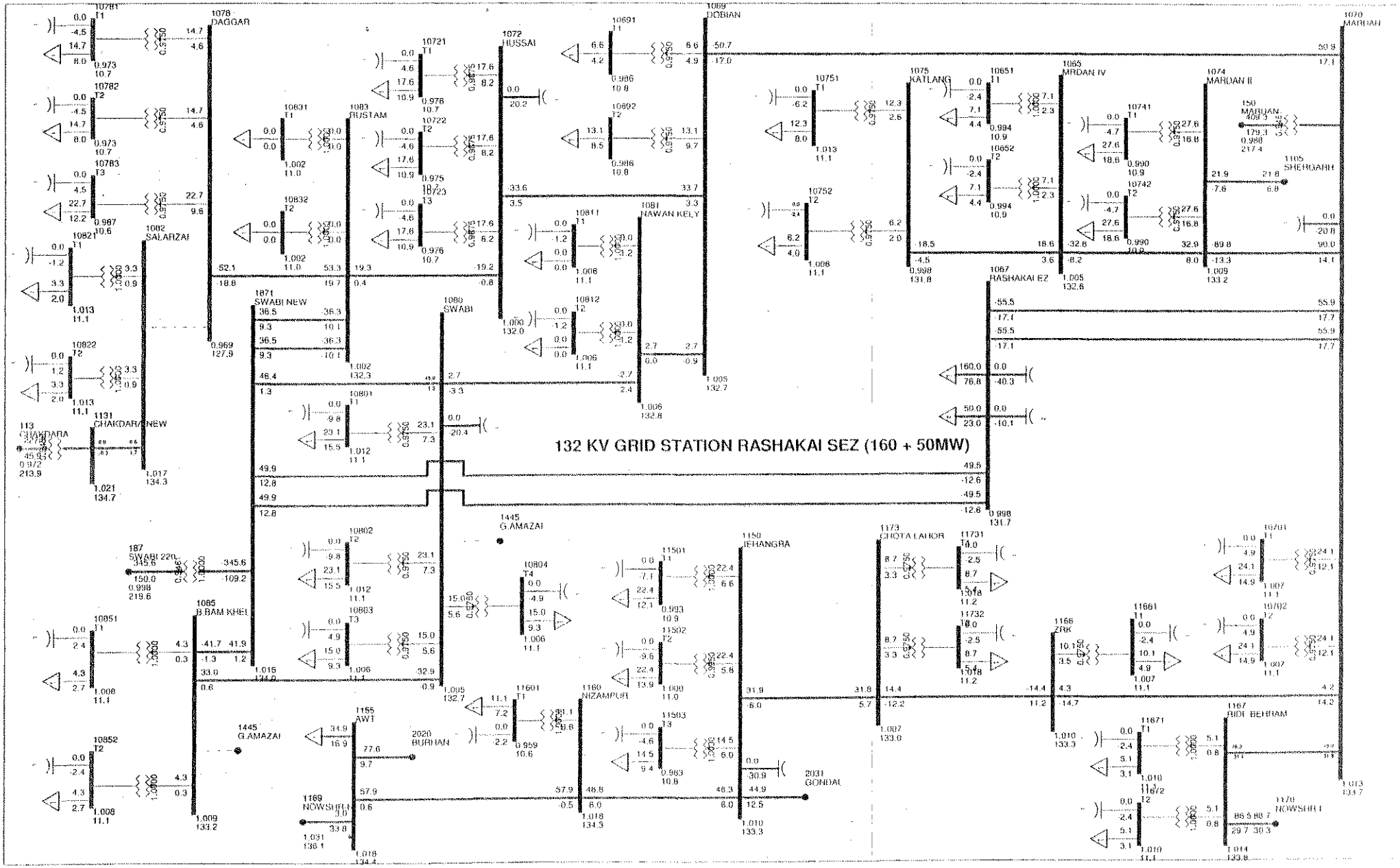

PESCO LOAD FLOW STUDY
YEAR 2022-23: BASE CASE WITHOUT 220/132 KV GRID STATION SWABI CONNECTIVITY

Exhibit-1-2022-23-1.2

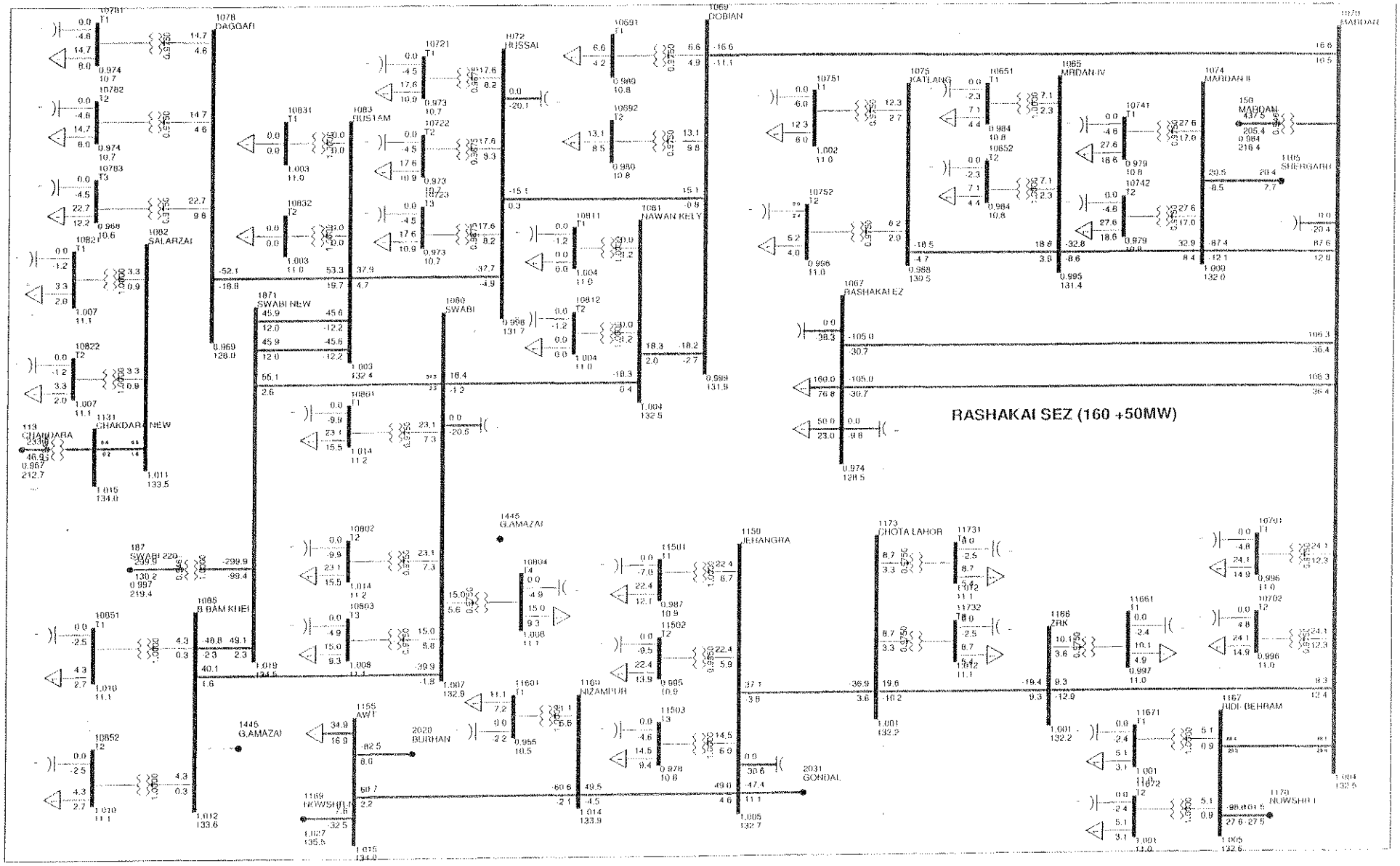

PESCO LOAD FLOW STUDY
YEAR 2021-22: BASE CASE WITHOUT REINFORCEMENT

Exhibit-1-2022-1.1

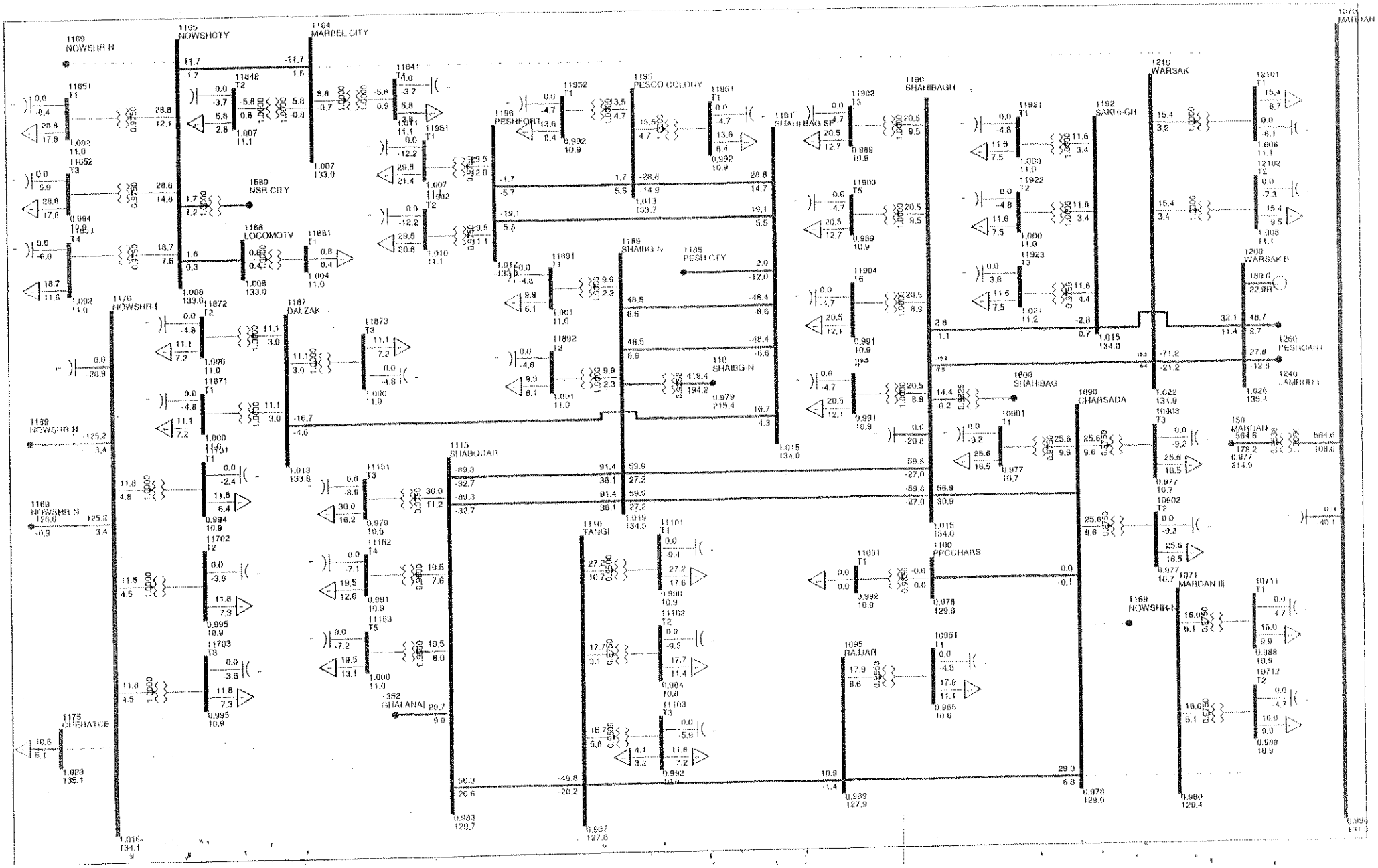

PESCO LOAD FLOW STUDY
YEAR 2021-22: BASE CASE WITHOUT REINFORCEMENT

Exhibit-1-2022-1.2

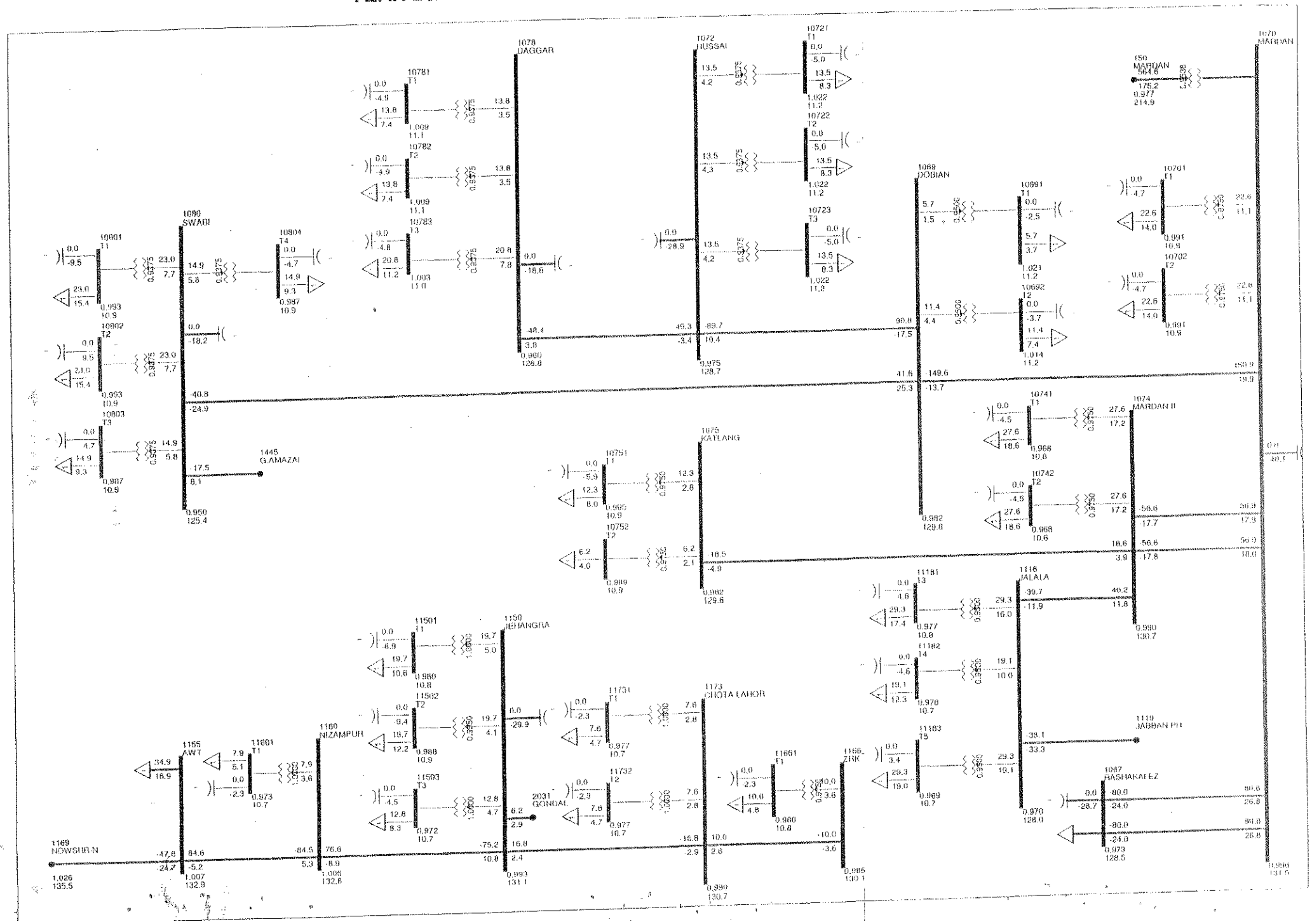

PESCO LOAD FLOW STUDY
YEAR 2021-22: BASE CASE WITHOUT REINFORCEMENT

Exhibit-1-2022-1.3

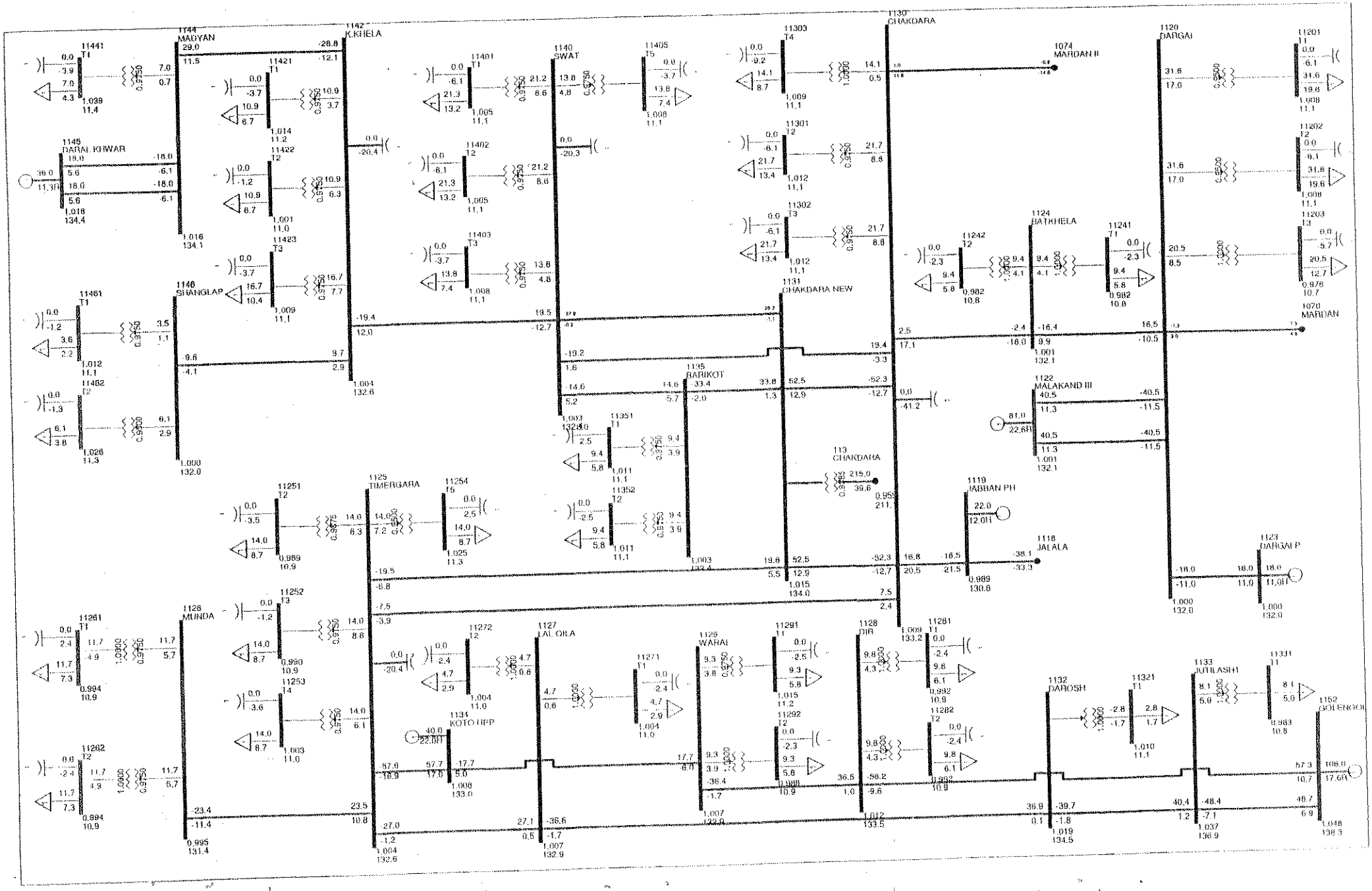

PESCO LOAD FLOW STUDY
YEAR 2021-22: BASE CASE WITHOUT REINFORCEMENT

Exhibit-1-2022-1.4

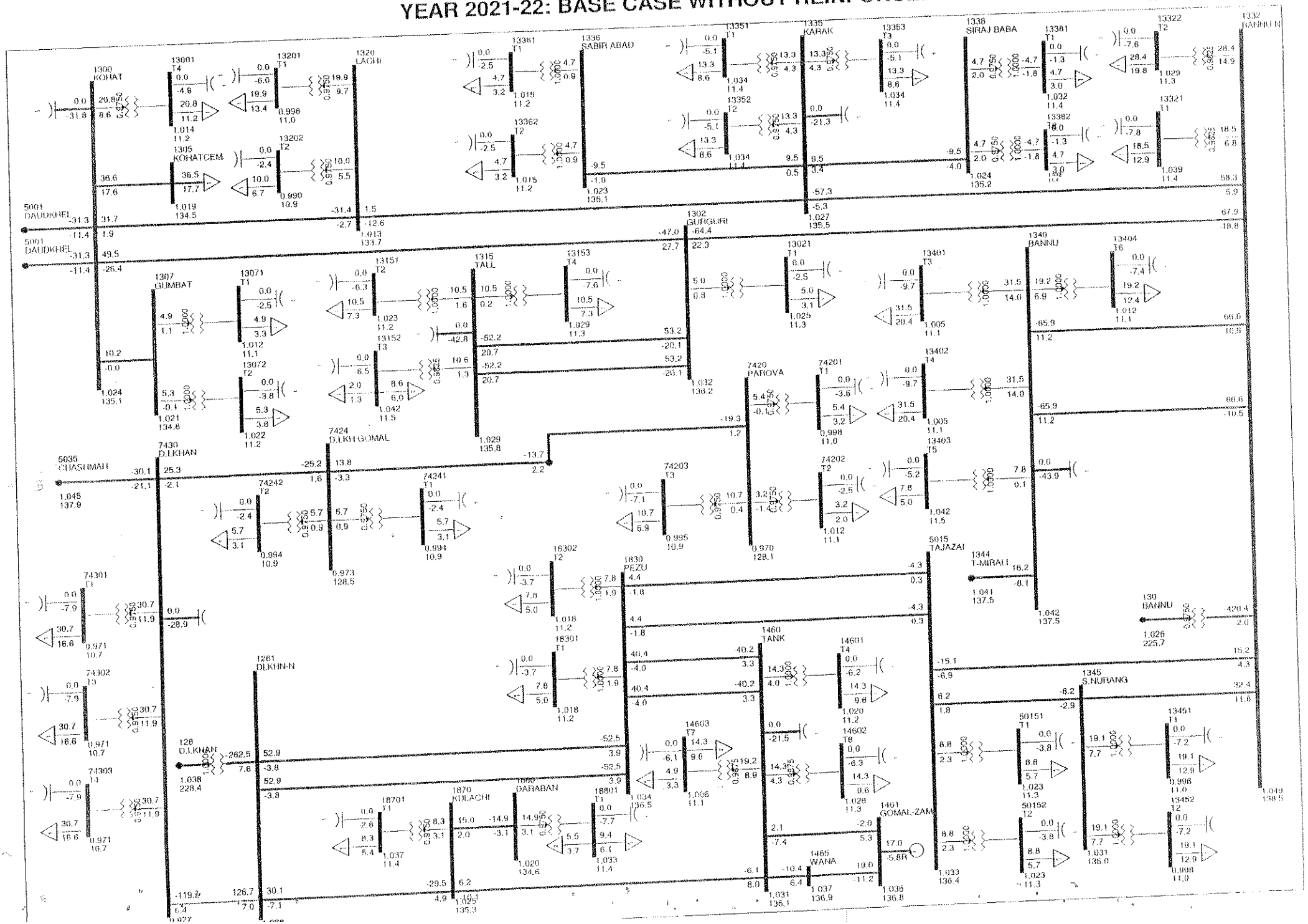

YEAR 2021-22: BASE CASE WITHOUT REINFORCEMENT

Exhibit-1-2022-1.5

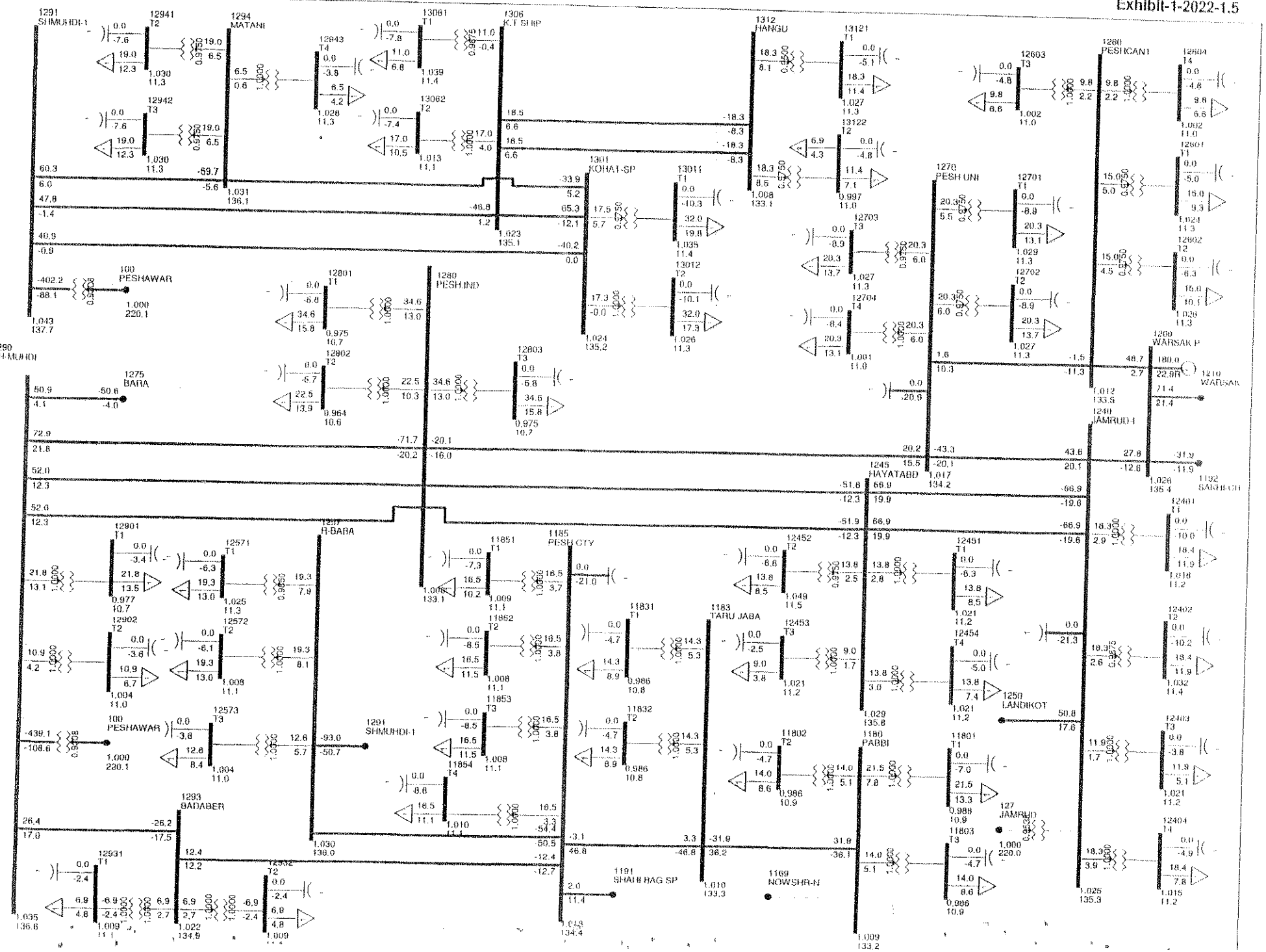

PESCO LOAD FLOW STUDY
YEAR 2021-22: BASE CASE WITHOUT REINFORCEMENT

Exhibit-1-2022-1.6

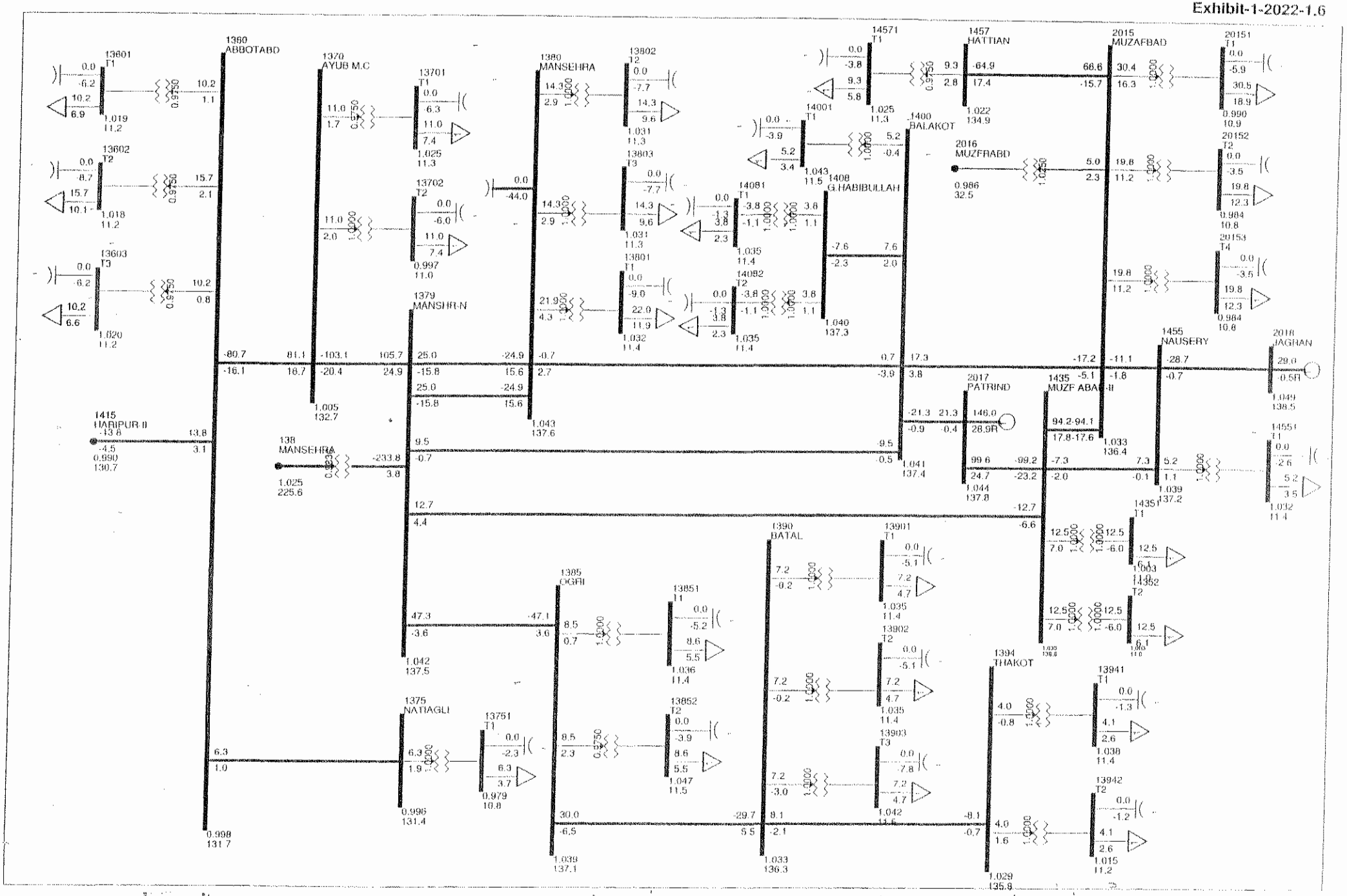

PESCO LOAD FLOW STUDY
YEAR 2021-22: BASE CASE WITHOUT REINFORCEMENT

Exhibit-1-2022-1.7

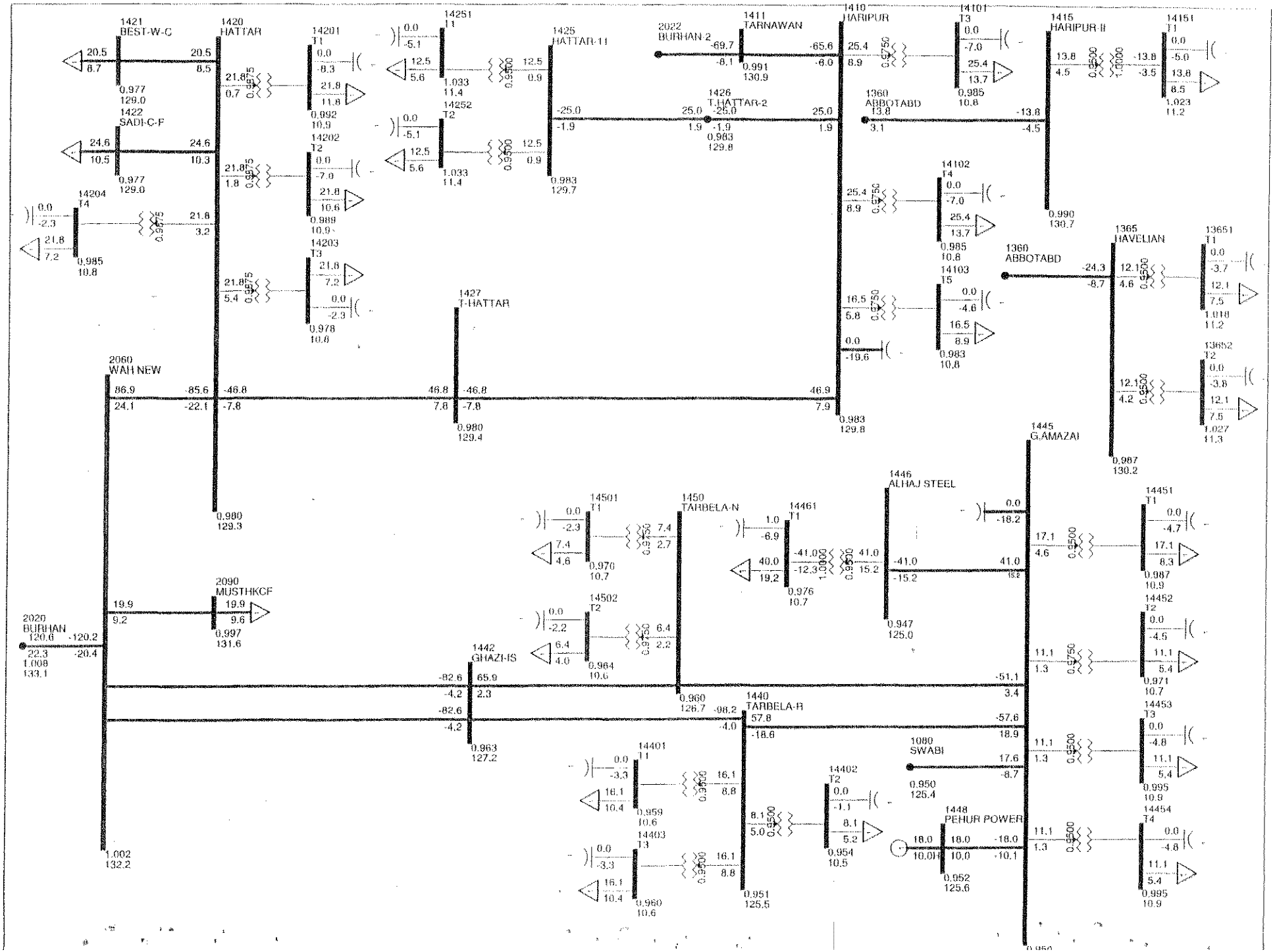

ANNEX-5

SR: No.	NAME OF GSS/ POWER HOUSE.	NAME OF TRANSMISSION LINES	BREAKER CODE NO.		LENGTH IN (K.Ms)	TYPE OF TOWER	TYPE OF CONDUCTOR	Current Carrying Capacity of the Line (On Presumption of Wind Velocity as 0.61 m/s & 40 Degree Rise) "Amp"	MAX LOAD (Amps)	Date	Time	% AGE Loading
			CONTR-OLLING	Other End								
12	132KV Tall	132KV Line Tall-Parachinar	TAL-3	ISO	78.532	ZM	LYNEX	488	200	26/09/2020	6:00	40.98
		66KV Line Tall-Alizai-Sadda-P/Chinar	TAL-2	ISO	90.695	SM	DOG	346	220	27/09/2020	07:00	63.58
13	132KV Charsadda	132KV Line Charsadda-Rajjar-Tangi	CSD-2	ISO	32.570	TBA,TYD	LYNEX	488	330	9/09/2020	20:00	67.62
		132KV Line Charsadda-Mardan-Shahibagh	CSD-3	E10Q1 SHB-3	0.400		LYNEX	488	0	-	-	0.00
		132KV Line Charsadda-PPC Mill	CSD-4	ISO	2.010	LANDATIVE	PAINTHER	533	0	-	-	0.00
14	132KV Tangi	132KV Line Tangi-Shabqadar	TNG-2	SQD-3	14.860	TBA,TYD	LYNEX	488	132	1/09/2020	09:00	27.05
15	132KV Shabqader	132KV Line Shabqader-Ghallanai	SQD-4	ISO	23.690	ZM	LYNEX	488	200	3/09/2020	10:00	40.98
		66 KV Line Shabqader-Ghallanai-Lakkarai.	SQD-2	ISO	33.600	SM GS	DOG	346	180	12/09/2020	7:00	52.02
	SS&TL DIVISION PESCO MARDAN											
1	220KV Mardan	132KV Line Mardan-Nowshera Indl	E1Q1	NSI-7	28.040	ZM,TBA, TYD,TM	LYNEX	488	390	09/09/2020	4:00	79.92
		132KV Line Mardan-ZRK Industry-Nowshera City	E2Q1	ISO	31.700	ZM,TBA, TYD,TM	LYNEX	488	400	14/09/2020	15:00	81.97
		132KV Line Mardan-Shahibagh up to Charsadda circuit # 1	E10Q1	SHB-3	26.030	ZM	LYNEX	488	330	12/09/2020	13:00	67.62
		132KV Line Mardan-Shahibagh up to Charsadda circuit # 2	E9Q1	SHB-4	26.030	ZM	LYNEX	488	0	-	-	0.00
		132KV Line Mardan-Jehangira	E7Q1	JNG-2	35.170	Landative, ZM	WOLF, LYNEX	446	400	20/09/2020	5:00	89.69
		132KV Line Mardan-Dargai	E8Q1	DRG-1	59.170	Landative, TBA	WOLF, LYNX	446	260	13/09/2020	1:00	58.30
		132KV Line Mardan-Dhobian	E13Q1	ISO	58.960	TBA, TM	LYNEX	488	540	09/09/2020	15:00	110.66
		132KV Line Mardan-Mardan-2	E15Q1	ISO	6.000	ZM	LYNEX	488	340	09/09/2020	21:00	69.67
		132KV Line Mardan-Mardan-3	E16Q1	MDN-1	6.920	TBA, TM	LYNEX	488	360	12/09/2020	19:00	73.77
		132KV Line Mardan-Jalala-Chakdara	E17Q1	ISO	77.000	ZM	LYNEX	488	320	11/09/2020	21:00	65.57
2	220KV Chakdara	132KV Line New Chakdara-old Chakdara	E2Q1	CKD-2	12.260	TBA,TYD,ZM	LYNEX/RAIL	488	285	15/09/2020	9:00	58.40
		132KV Line New Chakdara-Barikot	E3Q1	BKT-2	29.500	TBA,TYD,ZM	LYNEX/RAIL	488	320	20/09/2020	15:00	65.57
		132KV Line New Chakdara-Chakdara old	E5Q1	CKD-6	16.700	ZM,ZM30,ZM60,TBA, ED,EA,EG,TYD	LYNEX	488	260	13/09/2020	22:00	53.28
		132KV Line New Chakdara-Timergara	E7Q1	TGH-5	43.000	TBA,TYD,ZM	LYNEX	488	200	08/09/2020	23:00	40.98
3	220KV Nowshera	132KV Line 220KV Nowshera-AWT C/Factory	E13Q1	NCF-2	70.59	ZM, OA	ZAIGALOW, RAIL	498	106	17/09/2020	19:00	21.29
		132KV Line 220KV Nowshera-Nowshera Industrial	E11Q1	NSI-2	13.99	ZM,SPG,SPD, EA,ED	RAIL	868	440	17/09/2020	3:00	50.69
4	132KV Bari Kot	132KV Line Barikot-Swat Section	BKT-1	ISO	16.500	TBA,TYD,ZM	LYNEX/RAIL	488	253	23/09/2020	16:00	51.84
5	132KV Dargai	132KV Line Dargai-Chakdara	DRG-2	BKL-2	30.070	TBA, TYD, TM	LYNEX	488	130	14/09/2020	18:00	26.64
6	Jabban P/House.	132KV Line Jabban-Jalala section.	E1Q1	JLA-3	19.235	-	LYNEX	488	Meter defective			0.00
		132KV Line Jabban-Chakdara section.	E2Q1	CKD-8	26.620	-	LYNEX	488	150	11/09/2020	1:00	30.74
7	Malakand-III P/ House	132KV D/C LineMalakand-III -Dargai CCT-1	Q1,2,3,4	DRG-3	1.500	ZM,ZM30, ZM60	LYNEX	488	190	05/09/2020	1:00	38.93
		132KV D/C LineMalakand-III -Dargai CCT-2	Q1,2,3,4	DRG-4	1.500	ZM,ZM30, ZM60	LYNEX	488	190	05/09/2020	1:00	38.93

SR: No.	NAME OF GSS/ POWER HOUSE.	NAME OF TRANSMISSION LINES	BREAKER CODE NO.		LENGTH IN (K.Ms)	TYPE OF TOWER	TYPE OF CONDUCTOR	Current Carrying Capacity of the Line (On Presumption of Wind Velocity as 0.61 m/s & 40 Degree Rise) "Amp"	MAX LOAD (Amps)	Date	Time	% AGE Loading
			CONTR-OLLING	Other End								
8	132KV Chakdara	66-KV Line Chakdara-Timergara	CKD-4	ISO	32.330	GS	DOG	346	255	18/09/2020	13:00	73.70
		132KV Line Chakdara-Timeragara	CKD-9	TGH-4	30.000	TBA, TYD, TM	LYNEX	488	307	15/09/2020	10:00	62.91
		132KV Line Chakdara-Swat	CKD-10	SWT-2	34.150	ZM,SPD,EA	LYNEX	488	214	19/09/2020	15:00	43.85
9	132KV Timergara	66-KV Line Timeragar(132KV)-Bajawar	TGH-2	ISO	39.190	GS, ZM	DOG	346	255	03/09/2020	20:00	73.70
10	132KV Nowshera Industrial	132KV Line NSR. Indl-Burhan CCT-1	NSI-1	E6Q1	33.600	ZM, OA	ZAIGALOW	498	0	-	-	0.00
		132KV Line NSR: Indl - S/Bagh CCT-1	NSI-3	SHB-1	33.460	OA,ZM	ZAIGALOW LYNEX	488	211	01/09/2020	13:00	43.24
		132KV Line NSR: Indl - S/Bagh CCT-2	NSI-4	SHB-2	33.460	OA,ZM	ZAIGALOW LYNEX	488	260	09/09/2020	15:00	53.28
		132KV Line Nowshera Indl - Nowshera City	NSI-5	ISO	7.260	TBA, TYD, TM	LYNEX	488	315	17/09/2020	10:00	64.55
		132KV Line NSR: Indl-Cheral C.Fact.	NSI-6	ISO	16.070		LYNEX	488	53	10/09/2020	9:00	10.86
		132KV Line NSR: Industrial-220KV Mardan	NSI-7	E1Q1	28.040	ZM,TBA, TYD,TM	LYNEX	488	345	09/09/2020	2:00	70.70
11	132KV Nowshera City.	132KV Line Nowshera City-Locomotive Factory Risal-pur.	NSC-2	ISO	8.000	TBA, TYD, TM	LYNEX	488	2	01/09/2020	18.00	0.41
		66-KV Line NSR:City-Kheshki	NSC-5	ISO	15.460	SM, H-Pole	Stay wire	250	13.3	07/09/2020	18.00	5.32
12	132KV Jehangira	132KV Line Jehangira-Gondal- upto Attock	JNG-1	GND-1	11.210	ZM, Landative	LYNEX	488	280	15/09/2020	15.00	57.38
		132KV Line Jehangira-Mardan	JNG-2	E7Q1	35.170	ZM, Landative	LYNEX	488	400	20/09/2020	10.00	81.97
		132KV Line Jehangira-Nizampur	JNG-3	ISO	21.160	TBA, ZM, TYD,TM	LYNEX	488	282	14/09/2020	09.00	57.79
13	132KV Nizampur	132KV Line Nizampur-A.W.T C/Factory	NZP-2	ISO	1.080	TBA, ZM, TYD,TM	LYNEX	488	270	14/09/2020	14.00	55.33
14	132KV Kamra	132KV Line Kamra-AWT C.Factory section	PKR-2	NCF-3	47.000	-	LYNEX / Wolf	488	321	12/09/2020	17.00	65.78
15	132KV R / Bank Tarbela	132KV Line Right BankTarbela-Gadoon Amazai section.	RBT-2	GAZ-1	5.370	ZM	LYNEX	488	180	01/09/2020	01.00	36.89
16	132KV Gadoon Amazai	132KV Line Gadoon Amazai-Sawabi Circuit # 1	GAZ-3	SWB-2	17.000	ZM,SBA	LYNEX	488	190	26/09/2020	22.00	38.93
		132KV Line Gadoon Amazai-Sawabi Circuit # 2	GAZ-4	SWB-3	17.000	ZM,SBA	LYNEX	488	190	26/09/2020	22.00	38.93
		132KV Line Gadoon Amazai-Al Hajj Asia steel Mill	GAZ-6	AHA-1	3.760	SPA,SPG,SPD	LYNEX	488	186	10/09/2020	11.00	38.11
17	Pehure P/House	132KV Line Pehure P/House-Gadoon Amazai section	F1Q1	GAZ-5	1.050		LYNEX	488	40	12/09/2020	11.00	8.20
18	Golen Gol P/House (Chitral)	132KV Line Golen Gol P/House-Jutilasht section.	E2Q2 E2Q3	JLT-1	31.000	JKD,ED,ZM	Rail/Deer	800	34	04/09/2020	11.00	4.25
		132KV Line Golen Gol-Wari Section	E3Q2 E3Q3	WRI-3	-	JKD,ED,ZM	Rail/Deer	800	59	22/09/2020	21.00	7.38
19	132KV Wari	132KV T/Line Wari-Timergara Section	WRI-4	TGH-3		JKD,ED,ZM	Rail/Deer	800	81	10/09/2020	21.00	10.13
20	132KV Jutilasht	132KV Line Jutilasht-Drosh section	JLT-2	DRH-2	28.100	JKD,ED,ZM	Rail	868	1	18/09/2020	14.00	0.12
21	132KV Drosh	132KV Line Drosh-Timergara	DRH-1	TGH-1	115.770	JKD,ED,ZM	Rail/Deer	800	61	17/09/2020	15.00	7.63
22	66KV Timergara	66-KV Line Timergara-Bajawar	TMG-2	ISO	36.910	GS, ZM	DOG	346	0	-	-	0.00
		66-KV Line Timeragara-Wari-Dir	TMG-5	ISO	80.000	GS	DOG	346	112	04/09/2020	11.00	32.37

SR: No.	NAME OF GSS/ POWER HOUSE.	NAME OF TRANSMISSION LINES	BREAKER CODE NO.		LENGTH IN (K.Ms)	TYPE OF TOWER	TYPE OF CONDUCTOR	Current Carrying Capacity of the Line (On Presumption of Wind Velocity as 0.61 m/s & 40 Degree Rise) "Amp"	MAX LOAD (Amps)	Date	Time	% AGE Loading
			CONTR-OLLING	Other End								
23	132KV Mardan-II	132KV Line Mardan-2-Chakdara	MRD-2	CKD-7	71.000	ZM	LYNEX	488	235	23/09/2020	16.00	48.16
		132KV Line Mardan-Katlong	MRD-3	ISO	28.130	ZM	LYNEX	488	68	16/09/2020	22.00	13.93
24	132KV Hussai	132KV Line Hussai-Daggar section.	HSI-2	ISO	39.720	ZM	LYNEX	488	303	12/09/2020	13.00	62.09
25	132KV Dhobian	132KV Line Dhobian-Swabi section	DBN-1	ISO	25.090	TBA,TM	LYNEX	488	330	01/09/2020	01.00	67.62
		132KV Line Dhobian-Hussai-Daggar section	DBN-3	ISO	15.000	TBA,TM	LYNEX	488	450	14/09/2020	15.00	92.21
26	132KV Swat	132KV Line Swat-Khwaza Khela	SWT-3	ISO	28.471	TBA, TYD, TM	LYNEX	488	160	17/09/2020	13.00	32.79
27	132KV Khwaza khela	132KV Line Khwaza Khela-Madyan	KWK-2	ISO	20.000	TBA, TYD, TM	LYNEX	488	35	18/09/2020	12.00	7.17
		132KV Line Khwaza Khela-Sangla Par	KWK-3	ISO	20.460	TBA, TYD, TM	LYNEX	488	58	11/09/2020	12.00	11.89
28	Darral Khwar P/House (Madyan)	132KV Line Darral Khwar-Madyan-CCT-1	E5Q1	MYN-2	8.000	JKD,ED,ZM	RAIL	868	0	-	-	0.00
		132KV Line Darral Khwar-Madyan-CCT-2	E6Q1	MYN-3	8.000	JKD,ED,ZM	RAIL	868	188	02/09/2020	18.00	21.66
29	132KV Mardan-3	132KV Line Mardan-3 - Charsadda	MDN-2	CSD-5	27.930	TBA,SPA	LYNEX	488	253	09/09/2020	16.00	51.84
30	132KV Batkhela	132KV Line Batkhela - Chakdara	BKL-1	CKD-1	-	TBA, TYD, TM	LYNEX	488	225	06/09/2020	09.00	46.11
	SS&TL DIVISION PESCO BANNU											
1	220KV Domail (Bannu)	132KV Line Domail (Bannu)-Karak	E7Q1	KRK-1	37.850	ZM-1,ZM-30 ZM-60	LYNEX	488	300	9/17/2020	20.00	61.48
		132KV Line Domail (Bannu) -Gurguri	E6Q1	GRI-2	98.630	ZM-1,ZM-30 ZM-60	LYNEX	488	360	9/3/2020	07.00	73.77
		132KV Line Domail (Bannu)-Bannu CCT-2	E1Q1	BNU-1	10.260	ZM	LYNEX	488	360	9/15/2020	16.00	73.77
		132KV Line Domail (Bannu)-Bannu CCT-1	E2Q1	BNU-5	10.260	ZM	LYNEX	488	360	9/15/2020	16.00	73.77
		132KV Line Domail-Sarai Nourang.	E10,Q1	SRN-1	22.790	ZM	LYNEX	488	120	9/23/2020	12.00	0.00
		132KV Line Domail-Taja Zai Express section.	E11,Q1	TJZ-1	47.440	ZM	LYNEX	488	90	9/28/2020	14.00	0.00
2	220KV D.I.Khan	132KV Line D.I.Khan-Pezu CCT-1	E5Q1	PZU-3	32.760	ZM	Rail	868	210	9/9/2020	21.00	24.19
		132KV Line D.I.Khan-Pezu CCT-2.	E7Q1	PZU-4	32.760	ZM	Rail	868	210	9/9/2020	21.00	24.19
		132KV Line D.I.Khan-132KV old D.I.Khan	E2Q1	DIK-1	30.270	ZM-1,ZM-30 ZM-60,TBA	LYNEX	488	390	9/9/2020	04.00	79.92
		132KV Line D.I.Khan-Kulachi section	E3Q1	KCH-2	67.960	ZM-1,ZM-30 ZM-60,TBA	LYNEX	488	290	9/6/2020	21.00	59.43
3	132KV Kohat	132KV Line Kohat-Lachi CCT-1	KHN-4	LCH-1	29.050	ZM-1,ZM-30 ZM-60	LYNEX	488	170	9/30/2020	09.00	34.84
		132KV Line Kohat-Gurguri-Circuit # 2	KHN-5	GRI-1	84.080	ZM-1,ZM-30 ZM-60	LYNEX	488	50	9/1/2020	01.00	10.25
4	132KV Karak	132KV Line Karak-Lachi sec,	KRK-2	LCH-2	66.130	ZM	LYNEX	488	99	9/30/2020	08.00	20.29
		132KV Line Karak-Sabirabad	KRK-3	ISO	26.700	ZM	LYNEX	488	30	9/1/2020	04.00	6.15
5	132KV Bannu	132KV Line Bannu-Mir Ali-Miran Shah	BNU-6	ISO	60.140	ZM,TBA, TYD,TM	LYNEX	488	240	9/18/2020	11.00	49.18
		66-KV Line Bannu-Kurum Garhi	BNU-3	ISO	16.730	ZM, TUBLER	RABBIT, DOG	227	160	9/18/2020	10.00	70.48
6	132KV S/Nourang	132KV Line S/Nourang-Taja Zai section	SRN-2	TJZ-5	24.250	ZM	LYNEX	488	204	9/15/2020	14.00	41.80
7	132KV Gurguri	132KV Line Gurguri-Tall Section	GRI-4	TAL-4	25.350	ZM	LYNEX	488	360	9/3/2020	07.00	73.77

SR: No.	NAME OF GSS/ POWER HOUSE.	NAME OF TRANSMISSION LINES	BREAKER CODE NO.		LENGTH IN (K.Ms)	TYPE OF TOWER	TYPE OF CONDUCTOR	Current Carrying Capacity of the Line (On Presumption of Wind Velocity as 0.61 m/s & 40 Degree Rise) "Amp"	MAX LOAD (Amps)	Date	Time	% AGE Loading
			CONTR-OLLING	Other End								
8	132KV Noor Ahmad Wali	132KV Line Noor Ahmad Wali-D.I Khan a/w In Out Prova	NAW-2	PRV-1 DIK-3	97.500	ZM	LYNEX	488	103	9/20/2020	20.00	21.11
9	132KV Toonsa	132KV Line Tonsa-D.I Khan CCT-2	TSF-1	DIK-2	96.000	ZM	LYNEX	488	0	-	-	0.00
10	132KV Prova	132KV Line Prova-Gomal University DIKhan CCT-1	PRV 2	GMU-1	24.850	ZM	LYNEX	488	76	9/17/2020	21.00	15.57
11	132KV Gomal University DIKhan	132KV Line Gomal University DIKhan	GMU-2	DIK-3	21.080	ZM	LYNEX	488	79	9/6/2020	22.00	16.19
12	132KV D.I.Khan	66-KV Line D.I.Khan-Tank	DIK-6	TNK-1	65.660	TUBLER	RABBIT	227	0	-	-	
		66-KV Line D.I Khan-Band Kurai	DIK-5	ISO	29.000	SM	DOG	346	204	9/20/2020	06.00	58.96
13	132KV Kulachi	132KV Line Kulachi-Tank	KCH-3	TNK-5	68.000	TBA,ZM1, ZM 30	LYNEX	488	227	9/7/2020	16.00	46.52
		132KV Line Kulachi-Draban	KCH-4	ISO	28.652	ZM-1,ZM-30 ZM-60	LYNEX	488	44	9/16/2020	19.00	9.02
14	Chashma P/House	132KV Line Chashma-D.I Khan	E1Q1	DIK-4	84.100	ZM, Korean	LYNEX	488	380	9/10/2020	06.00	77.87
15	132KV Left Bank Chashma	132KV Line Left Bank Chashma-D.I.Khan Section	CHM-3	DIK-8	85.440	ZM, Korean	LYNEX	488	303	9/9/2020	07.00	62.09
16	132KV Daud Khel	66-KV Line Daud Khel-Trug-Tajazai	DKL-7	TJZ-2	63.630	TUBLER	DOG	346	266	9/24/2020	15.00	76.88
17	132KV Tajazai	132KV Line Tajazai- Pezu, CCT-1	TJZ-6	PZU-2	37.441	SM,ZM	LYNEX	488	186	9/15/2020	15.00	38.11
		132KV Line Tajazai- Pezu, CCT-2	TJZ-7	PZU-3	37.441	SM,ZM	LYNEX	488	186	9/4/2020	15.00	38.11
18	66 KV Tajazai	66-KV Line Tajazai-Tank-T/Off Pezu	TJZ-3	TNK-7	72.050	TUBLER	RABBIT, DOG	227	0	0	00.00	0.00
19	Gomal Zam Dam P/House	132KV D/C Line Gomal Zam Dam Tank section	E1Q1	TNK-9	58.400	ZM	LYNEX	488	41	9/10/2020	21.00	8.40
20	132KV Tank	132KV Line Tank-Wana (TESCO)	TNK-10	WANA-2	105.000	ZM-1	LYNEX	488	109	9/22/2020	17.00	22.34
		66-KV Line Tank-Old Tank-Pezu-Tajazai	TNK-7	TJZ-3	77.870	TUBLER	RABBIT, DOG	227	180	9/11/2020	09.00	79.30
		66-KV Line Tank (132KV)-Jandola sec. under (TESCO)	TNK-8	JDL-2	37.160	SM	DOG	346	150	9/7/2020	21.00	43.35
	SS&TL DIVISION PESCO ABBOTTABAD											
1	220KV Burhan	132KV Line Burhan-In Out Tarnawa-Haripur Circuit # 1	E9Q1	HRP-4	54.970	ZM	LYNEX	488	290	9/5/2020	22.00	59.43
		132KV Line Burhan-Haripur, CCT-2	E1Q1	HRP-6	33.510	ZM	LYNEX	488	290	9/5/2020	22.00	59.43
2	220KV Mansehra	132KV Line Mansehra-old Mansehra	E6Q1	MSR-3	6.300	ZM	LYNEX	488	400	9/24/2020	19.00	81.97
		132KV Line Mansehra-oghi	E7Q1	Iso	34.340	ZM	LYNEX	488	160	9/27/2020	20.00	32.79
		132KV Line Mansehra- AMC - A/Abad	E2Q1	AMC-2	17.340	BC,TYD, TBA, ZM	LYNEX	488	400	9/12/2020	19.00	81.97
		132KV Line Mansehra- old Mansehra	E4Q1	ISO	13.400	BC,TYD, TBA, ZM	LYNEX	488	150	9/24/2020	19.00	30.74
3	132KV Haripur	132KV Line Haripur-Havellian CCT-1	HRP-7	HVN-1	20.480	TBA, TM	LYNEX	488	220	9/15/2020	21.00	45.08
		132KV Line Haripur-Abbottabad CCT-2	HRP-8	ABN-3	49.180	ZM	LYNEX	488	166	9/15/2020	21.00	34.02
		132KV Line Haripur- Hattar-Wah	HRP-3	HTR-4	28.340	ZM, TM	LYNEX	488	154	9/15/2020	10.00	31.56
4	132KV Kholian Bala (Havellian)	132KV Line Havellian-Abbottabad	HVN-2	ABN-1	24.000	TBA, TM	LYNEX	488	223	9/15/2020	21.00	45.70

SR: No.	NAME OF GSS/ POWER HOUSE.	NAME OF TRANSMISSION LINES	BREAKER CODE NO.		LENGTH IN (K.Ms)	TYPE OF TOWER	TYPE OF CONDUCTOR	Current Carrying Capacity of the Line (On Presumption of Wind Velocity as 0.61 m/s & 40 Degree Rise) "Amp"	MAX LOAD (Amps)	Date	Time	% AGE Loading
			CONTR-OLLING	Other End								
5	132KV Abbottabad	132KV Line Abbottabad-AMC Abbottabad	ABN-2	ISO	6.000	BC,TYD, TBA, ZM	LYNEX	488	285	9/12/2020	19.00	58.40
		132KV Line Abbottabad-Nathiagali	ABN-4	ISO	19.440	ZM,TYD,TM	LYNEX	488	262	9/5/2020	20.00	53.69
6	132KV AMC A/Abad	132KV Line AMC Abbottabad-Mansehra	AMC-2	ISO	14.450	BC,TYD, TBA, ZM	LYNEX	488	390	9/14/2020	20.00	79.92
7	132KV Mansehra	132KV Line Mansehra-Balakot	MSR-2	ISO	41.400	BC,TYD, TBA, ZM	LYNEX	488	400	9/6/2020	19.00	81.97
8	132KV Oghi	132KV Line Oghi-Battal	OGH-2	ISO	15.230	BC,TYD, TBA, ZM	LYNEX	488	101	9/5/2020	21.00	20.70
9	132KV Balakot	132KV Line Balakot-Muzaffarabad	GHL-2	MZB-1	27.360	TYD,TM,ZM	LYNEX	488	417	9/6/2020	04.00	85.45
10	132KV Hattar	132KV Line Hattar-Saddi Cement Factory	HTR-2	ISO	4.800	ZM,TYD,TBA	LYNEX	488	0	-	-	0.00
		132KV Line Hattar-Bestway C/Factory	HTR-3	ISO	6.000	ZM,TYD,TBA	LYNEX	488	30	9/4/2020	09.00	6.15
		132KV Line Hattar-Haripur section.	HTR-4	HRP-3	24.340	TYD,TM,ZM	LYNEX	488	127	9/23/2020	13.00	26.02
11	132KV Wah	132KV Line Wah-Hattar	WAH-3	HTR-1	28.340	ZM, TM	LYNEX	488	380	9/26/2020	12.00	77.87
		132KV Line Wah-Nishat Tarbela Section	WAH-7	ISO	35.000	ZM, TM	ZAIGALOW/LYNEX	488	360	9/18/2020	07.00	73.77
		132KV Line Wah-Gadoon Amazai section	WAH-8	GAZ-2	47.780	ZM, TM	ZAIGALOW/LYNEX	488	360	9/18/2020	07.00	73.77
		132KV Line Wah-Mustehkam Cement Fac. section	WAH-9	ISO	11.000	BBA,TYD	LYNX	488	140	9/24/2020	00.00	28.69
		66-KV Line Wah Haripur	WAH-11	ISO	32.000	R/H-Pole	DOG	346	125	9/22/2020	19.00	36.13
12	132KV N/Tarbela	132KV Line Nishat Tibela-R/Bank Tarbela-G/Amazai	NST-2	KBT-2	12.500	ZM, TM	LYNEX	488	296	9/9/2020	16.00	60.66
13	66 KV Haripur	66-KV Line Haripur-A/Abad-T/Off Havelian	HRP-2	ISO	44.200	R/H-Pole	DOG	346	0	By Pass		
14	Jagran P/House	132KV Line Jagran P/House-Noseri	JRN-1	NUS-3	30.780	ZM	LYNEX	488	130	9/5/2020	00.00	26.64
15	132KV Muzaffarabad	132KV Line Muzaffarabad-Noseri section	MZB-5	NUS-2	30.780	ZM	LYNEX	488	114	9/1/2020	04.00	23.36
		132KV Line Muzaffarabad-In Out Rampura-Hattian	MZB-4	RPR-3	36.000	ZM	LYNEX	488	315	9/8/2020	15.00	64.55
		33KV Line M/Abad-Majohi-Chatter Class	MZB-3	ISO	36.980	STP	DOG	346	0	-	-	-
16	132KV Noseri	132-KV Line Noseri-Muzafarabad section.	NUS-2	MZB-5	37.100	ZM	LYNEX	488	122	9/6/2020	03.00	25.00
17	Patrind P/House	132-KV Line Patrind P/House-Rampura cct-1	E2Q1	RPR-1	6.000	ZM	Rail	625	315	9/4/2020	13.00	50.40
		132-KV Line Patrind P/House-Rampura cct-2	E5Q1	RPR-2	6.000	ZM	Rail	625	315	9/4/2020	13.00	50.40
18	132KV Rampura	132-KV Line Rampura-Hattian section.	RPR-4	ISO	37.720	ZM	Lynex	488	340	9/4/2020	19.00	69.67
19	Khan Khawar P/H	132-KV Line Khan Khawar-Besham section.	E1Q1	BHM-1	0.620	ZM	Lynex	488	85	9/18/2020	20.00	17.42
20	132KV Besham	33KV Line Besham-Thakot-Pattan	33KV	ISO	75.000	STP	DOG	346	80	9/23/2020	19.00	23.12