10692

PESCO Tariff Petition under Section 20 for function of Distribution of Electric Power for FY 2018-19 and FY 2019-20

300 of

PESHAWAR ELECTRIC SUPPLY COMPANY LIMITED

PETITION FOR DETERMINATION OF CONSUMER END TARIFF
FOR FY 2018-19 & FY 2019-20
Before
The Honorable National Electric Power Regulatory Authority

1. PETITION SUMMARY

1.1 Details of Petitioner

Peshawar Electric Supply Company Ltd. Wapda House, Shami Road, Peshawar (referred hereunder as PESCO) was incorporated on 23rd April 1998. It was organized to take over all the properties, rights, obligations and liabilities of Water and Power Development Authority (WAPDA). NEPRA granted Distribution License No.07/DL/2002 to PESCO on 30-04-2002 for electricity distribution in Khyber Pakhtunkhwa jurisdiction of PESCO.

This petition is being filed in the light of updated NEPRA Act, wherein through the act of parliament the Distribution (Non-Sale Elements) has been separated from the Commercial services of a Distribution Company, the Act has also introduced Market Operator, Electric Power Trader, and Electric Power Supplier. According to revised NEPRA Act, "Distribution" licensees under Section 20 shall be limited to ownership, operation, management or control of distribution facilities for the movement or delivery to consumers of electric power. This petition is being file under the compliance of the said act for Distribution business only.

1.2 PESCO is represented by the following duly authorized persons:

- Engr. Muhammad Amjad Khan — Chief Executive Officer
- Engr. Adnan Riaz Meer — General Manager Technical
- Engr. Ch. Yaqoob Khan, — General Manager Commercial
- Engr. Jabbar Khan, — Chief Engineer Development PMU
- Engr. Khadim Hussain Lara, — Chief Engineer Operation
- Engr. Maula Dad Khan — Chief Engineer (T&G)
- Engr. Khalid Khan — Chief Engineer (P&E)
- Mr. Iqbal Haider, — DG (Human Resource)
- Mr. Yaser Naseem, — Finance Director

2. GROUNDS FOR PETITION

Respectfully submitted,

2.1 That NEPRA, under the regulation of Generation, Transmission and Distribution of Electric Power Act, 1997 (hereinafter NEPRA Act), amended by the act of parliament, wherein it has been enacted as this Act shall be called the Regulation of Generation, Transmission and Distribution of Electric Power (Amendment) Act 2018, is responsible for regulating the electricity sector in Pakistan which includes determining the Revenue Requirement, tariffs and other terms and conditions for the supply of electricity by the Generation, Transmission and Distribution Companies and to recommend the same to the Federal Government for notification. For this purpose NEPRA has laid down certain guidelines and procedures under the NEPRA Tariff Standards and Procedures Rules, 1998 and subsequent amendments made in the act. This petition is being filed in the light of updated NEPRA Act, wherein through the act of parliament the Distribution (Non-Sale Elements) has been separated from the Commercial services of a Distribution Company. According to revised NEPRA Act, "Distribution" licensees under Section 20 shall be limited to ownership, operation, management or control of distribution facilities for the movement or delivery to consumers of electric power.

2.2 That PESCO, being a bonafide power distribution licensee, as on the date of amendment of NEPRA Act (amendment 2018) requires adequate revenues in order to perform its obligatory duties prescribed by NEPRA under the NEPRA Act (amendment 2018), NEPRA Performance Standards (Distribution) Rules 2005, NEPRA Consumer Eligibility Criteria 2003, Distribution License of PESCO and other Obligations as determined by NEPRA from time to time. The main source of funding available to the petitioner for their revenue requirements are; (i) internal efficiency improvements, (ii) generation of adequate revenue through tariff and (iii) funding / borrowings. Internal efficiency improvements require commensurate financial resources either through borrowings or tariff. As per general principles of banking industry, international or local, the financial

viability of borrowing organization is always taken as fundamental for lending decisions.

2.3 That in order to fulfill and perform its obligatory duties as mentioned above and to ensure financial viability of PESCO by recovering its prudently incurred costs and reasonable return, in order to upkeep and maintain its existing distribution services / network and to support the future investments for expansion of distribution services / network, this Petition is being filed for FY 2018-19 and FY 2019-20 through its Chief Executive Officer and other officers of PESCO, who have been duly authorized to sign and file this petition by the Board Of Directors, PESCO in its 135th Meeting held on 01-08-2019, placed at **Annex-A.**

PESCO'S REVENUE REQUIREMENT

The Revenue Requirement of PESCO for Distribution of Electricity has two components i.e distribution margin and Financial Charges. The Distribution Margin of Distribution (Non-Sale Elements) comprises of Actual salaries and wages of GSO Circle, PD GSC and PD C&O, XEN Operations etc, since these circles / directorates are responsible for construction, rehabilitation, augmentation and similar activities involved in Distribution (Non-Sale Elements) for providing electricity to the end consumers.

The XEN offices comprises of technical as well as administrative staff, the salaries of technical officer and officials such as XEN, SDO, line man, assistant line man, line supervisor etc. have been allocated to Distribution (Non-Sale Elements) on actual basis except for meter reader, bill distributer and meter reader supervisor, as the same has been allocated to Power Supply (Sale of Electric Power) as their job description relates to billing and recovery.

Moreover, the expenditure of HQ, and other offices has been allocated on the most suitable basis to Distribution (Non-Sale Elements) or Power Supply (Sale of Electric Power).

Distribution Margin is calculated in the light of NEPRA guidelines for determination of consumer end guidelines and is equally important as PESCO must earn sufficient distribution margin and adequate stream of cash flow to

maintain its system, discharge its financial commitments, invest to expand and maintain the network and to provide a reasonable return to the sponsors on their investment.

In view of the above, PESCO is submitting the tariff petition for the period FY 2018-19 and FY 2019-20 in light of the Nepra (Amendment) Act 2018, under Section 20 for Distribution. Following are the cost categories to be considered for Distribution Licensee:

A) Distribution Margin.

B) Financial Charges.

1. DISTRIBUTION MARGIN:

The Distribution Margin consists of the following factors:

- Operation & Maintenance Expenses:
  - Operational Expenses:
    - Salary Wages & Other Benefits
    - Travel Expenses
    - Vehicles Expenses
    - Other Expenses -
  - Repairs & Maintenance Expenses
  - Other Income
- Depreciation Expense
- Return on Rate Base

The sum of the O&M Cost, Depreciation, Provision for Bad Debts and RORB minus Other Income results in PESCO's Distribution Margin, dividing this by the total units sold yields the average Distribution Margin per Kwh. The DM of PESCO for Distribution Licensee for FY 2018-19 and FY 2019-20 is Rs. 1.90/Kwh and Rs. 2.09/Kwh respectively.

i. O&M EXPENSES

O&M expenses include Salaries & Wages, Repair & Maintenance, Travelling, Vehicle Running and Other Expenses. Based on the impact of increase in inflation, salaries and other allowances, the Audited O&M Expense for Distribution (Non-Sale Elements) for FY 2018-19 is Rs. 14,370 Million and for FY 2019-20 it is projected as Rs. 15,739 Million.

The breakup of O&M cost for Distribution (Non-Sale Elements) for FY 2018-19 & FY 2019-20 is as follows:

DESCRIPTION	FY 2018-19		FY 2019-20	
	Distribution (Non-Sale Elements)	Rs./Kwh	Distribution (Non-Sale Elements)	Rs./Kwh
Salaries and Benefits	12,949	1.42	14,055	1.53
Repair and Maintenance	860	0.09	1,100	0.12
Traveling Expenses	208	0.02	229	0.02
Vehicle Expenses	176	0.02	195	0.02
Other Expenses	177	0.02	160	0.02
Sub-Total	**14,370**	**1.58**	**15,739**	**1.71**
Financial Charges	175	0.02	275	0.03
Grand Total	**14,545**	**1.60**	**16,014**	**1.74**

Salaries & Wages including employee's retirement benefits is the major component of O&M expense. Since PESCO was incorporated as company in compliance with power sector reform policy of Government of Pakistan and the WAPDA employees working in Area Electricity Board Peshawar gradually become employees of the company in terms of the Man Power Transition Plan, therefore PESCO had to Maintain the GOP pay scales and the terms of employment for the employees which were prevalent in WAPDA. The following additional increases are also made by GoP in its annual budget for FY 2019-20:

Increase in Pay & Allowances announced for FY 2019-20:

1. 10% increase in pay of BPS 1-16 w.e.f. 1st July 2019.
2. 5% increase in pay of BPS 17-20 w.e.f. 1st July 2019.
3. 10% increase in Pension w.e.f 1st July, 2019.
4. Increase in Head Quarter Allowance, Washing Allowance & Livery Allowance etc.

5. Impact of Additional Recruitment (PESCO has initiated process of recruitment of 3,596 posts and the same has been advertised in June, 2019)
6. Cash Medical allowance has been allowed @ 15% of running basic pay to officers/officials posted at stations beyond 30 km radius of WAPDA hospitals/dispensaries and increase in various medical related expenditure, as per the new health care policy.
7. Upgradation of Dead Cadre Employees, Drivers, Meter Reading Section Supervisor, Meter Supervisor Grade-II, Store System Supervisor, Meter Mechanic, Meter Repairer & Relay Mechanic.
8. Increase in maternity Charges, Increase in marriage grant etc.
9. Adoption of transfer policy.

a. Employees Retirement Benefits have been based on the average of annual increase in the last three years audited figures as per the assumption used by the Valuer, M/S SIR Consultants. Accordingly, pension increase of 7.50% has been assumed, equivalent to discount rate of 13%.

b. Keeping in view the above increases, the Salaries and Wages are based on the Audited Financial Statement of PESCO for FY 2016-17 & Provisional figure for FY 2018-19 and Projected for FY 2019-20 is Rs. 12,949 Million & Rs. 14,055 Million respectively.

i. **REPAIR & MAINTENANCE EXPENSES:**

Repair and Maintenance expenses have been assumed @ around 2% of the net Fixed Assets in operation. PESCO has to maintain its old and over loaded system in order to ensure un-interrupted power supply to the consumers, moreover cost of material has also increased due to inflationary pressure. Therefore, Repair & Maintenance expenditure has been projected as Rs. 1,100 Million for Distribution (Non-Sale Elements) for FY 2019-20. Repair and Maintenance budget is required for the following:

1. Repairs of Power Transformers damaged at Grid Stations and controlling Breakers, Isolators etc.
2. Repairs and Maintenance of 3,687 KM Transmission Lines.
3. Repair & Maintenance of 1,041 Nos 11KV feeders.

4. Repair & Maintenance of 36,679 KMs HT Lines.
5. Repair & Maintenance of 45,120 KMs LT Lines.
6. Repair & Maintenance of 76,126 Nos of Distribution Transformers

Repair & Maintenance Cost for Tariff Control Period

Rs. in Million

DESCRIPTION	FY 2018-19 (Prov.)		FY 2019-20 (Projected)	
	Distribution (Non-Sale Elements)	Rs./Kwh	Distribution (Non-Sale Elements)	Rs./Kwh
Repair And Maintenance	860	0.09	1,100	0.12
% Increase/ (Decrease)			28%	

ii. **TRAVELLING EXPENSES:**

Travelling Expenses for Distribution (Non-Sale Elements) are Rs. 208 million for the FY 2018-19 & have been projected as Rs. 229 million for FY 2019-20.

DESCRIPTION	FY 2018-19 (Prov.)		FY 2019-20 (Projected)	
	Distribution (Non-Sale Elements)	Rs./Kwh	Distribution (Non-Sale Elements)	Rs./Kwh
Traveling Expenses	208	0.02	229	0.02
% Increase/ (Decrease)			10%	

iv) **VEHICLE RUNNING EXPENSES:**

Vehicle Running Expenses for Distribution (Non-Sale Elements) have been Rs. 176 million (prov.) for the FY 2018-19 and projected as Rs. 195 Million for FY 2019-20. PESCO has a fleet of more than 700 vehicles. Most of the vehicles are old and has completed useful life of 10 years & need major overhauling. Financial position of PESCO does not allow us to replace them with new vehicles. We are left with no option but to maintain them. Moreover the cost of POL has increased manifolds & the cost of parts of vehicle is also increasing due to inflation, a part from above PESCO's distribution system is spread all over

Khyber Pakhtunkhwa Province and it has to be maintained, hence PESCO requires funds for running of vehicles as well as for their maintenance.

Vehicle Running Expenses for Tariff Control Period

Rs. in Million

DESCRIPTION	FY 2018-19 (Prov.)		FY 2019-20 (Projected)	
	Distribution (Non-Sale Elements)	Rs./Kwh	Distribution (Non-Sale Elements)	Rs./Kwh
Vehicle Expenses	176	0.02	195	0.02
% Increase/ (Decrease)			11%	

v) OPERATING EXPENSES:

Other Operating expenses for Distribution (Non-Sale Elements) are Rs. 177 Million for FY 2018-19 & Rs. 160 million have been projected for FY 2019-20. Other Expenses include Rent, Rates and Taxes, Utility expenses, communications, office supplies, professional fees, auditor remunerations, outsourced services, management fees, electricity bill collection expenses etc.

Other Operating expenses for Tariff Control Period

Rs. in Million

DESCRIPTION	FY 2018-19 (Prov.)		FY 2019-20 (Projected)	
	Distribution (Non-Sale Elements)	Rs./Kwh	Distribution (Non-Sale Elements)	Rs./Kwh
Other Expenses	177	0.02	160	0.02
% Increase/ (Decrease)			(9.6%)	

vi) DEPRECIATION

Depreciation for FY 2018-19 is calculated on the basis of the value of existing Assets plus the additions in assets during the FY 2017-18, total Actual depreciation for FY 2017-18 was Rs. 2,644 Million. The assets are depreciated on straight line method as per utility practice i.e land @ 0 %, buildings and civil works @ 2%, Plant and machinery @ 3.5%, office equipment and mobile plant @ 10% and other assets @ 10% based upon these assumptions the figure for

depreciation has been worked as Rs. 2,766 & Rs. 3,042 Million for FY 2018-19 & FY 2019-20, respectively.

Depreciation Expense for Tariff Control Period

Rs. in Million

DESCRIPTION	FY 2018-19 (Prov.)		FY 2019-20 (Projected)	
	Distribution (Non-Sale Elements)	Rs./Kwh	Distribution (Non-Sale Elements)	Rs./Kwh
Depreciation	2,766	0.3	3,042	0.33
% Increase/ (Decrease)			10%	

vii) RETURN ON RATE BASE (RORB):

NEPRA allowed 11.25% WACC to PESCO in its tariff determination for FY 2016-17, PESCO has reservation on the calculation of allowed WACC of 11.83% and RORB of Rs. 2,329 Million which was further reduced to Rs. 2,255 Million (during reconsideration decision without any details/justification) as determined for FY 2015-16. Authority has been allowing a minimum of 80% debt and 20% equity in the previous years since FY 2008-09 and RORB of 14.18% since FY 2014-15, however for FY 2015-16 by considering the process of privatization, the debt to equity ratio has been changed to 30% & 70% respectively. The Authority is requested to apply the assumption consistently for a reasonable control period instead of changing it every third to fourth year.

Firstly for the assessment of ROE component, weighted average yield on 05 years Pakistan investment bond (PIB) as of July 16, 2015 has been considered as risk free rate which is 8.9652%. Moreover the rate of return on KSE-100 index during the period from 2008 to 2015 was around 16.5% which translated in to risk premium of around 7.53% and the risk premium used by different brokerage houses of the country ranges between 6% to 7% and accordingly Authority assumed market risk premium of 7% which may be reconsidered as only Karachi generates almost 60% of the business activity as compared to Peshawar which is 200% folds higher. These assumptions were considered without even considering the economic conditions of KPK and the effect of war on terror on the business environment in which PESCO is operating. Accordingly the area of operation

and the economic conditions of the area needs to be considered and necessary adjustments may be made to the risk premium because of the fact that the market in Khyber Pakhtunkhwa is riskier than that of other parts of the country and a margin of 1% to 2% may be added to the new base line. The linking of return with Transmission & Distribution losses margin allowed by Authority may not be justified as Power Purchase Price is a pass through item and relates to the cost and has no co-relation with return which is for the equity holder.

Another assumption was made by Authority for measurement of Beta in order to arrive at a suitable measure Authority conducted an in house analysis and arrived at appropriate measure of 1.10. In order to ascertain cost of debt Authority has decided to take cost of debt as 3 months KIBOR+2.75 spread. Consequently the cost of debt has worked out as 9.76% i.e. 3 months KIBOR of 7.01% as of July 2nd, 2015 plus 2.75% spread. Based on the above assumptions the WACC for FY 2015-16 is 11.83% as compared to 14.18% approved by Authority for FY 2014-15.

The Authority may also consider the sources of financing as well as the actual loans on Balance Sheet of the company that include foreign loan & FDI that also carry interest and exchange risk.

As per amortization schedule provided by Economic Affairs Division (EAD) for ADB Trench-I, II & III, PESCO has to pay the interest charges as well the exchange risk and Principal repayments.

PESCO has no other source of revenue except Tariff to pay off the principal, interest and exchange risk payable to EAD except for consumer end Tariff and if not allowed, it will in any way effect the consumers as the same will be passed in the form of deficit financing resulting in financial hardship to the consumers.

PESCO is of the opinion that return should be adequate enough to not only cover the cost of debt but also to cater for the exchange rate parity as well as reasonable return to the equity holders. Authority is therefore requested that RORB of Rs. 6,016 Million may be allowed for FY 2018-19, and Rs. 6,922 million for FY 2019-20 based on 14.98% WACC, including debt of 14.56% after adjustment of the interest on Exchange Risk Coverage on ADB as per following calculations:

Description	Rupees in Million		
	FY 2017-18 Audited	FY 2018-19 Provisional	FY 2019-20 Projected
Gross Fixed Assets In Operation–Opening Balance	66,682	76,825	85,081
Addition in Fixed Assets	10,144	8,255	8,334
Gross Fixed Assets In Operation–Closing Balance	76,825	85,081	93,414
Less Accumulated Depreciation	(26,449)	(29,522)	(32,902)
Net Fixed Assets in Operation	50,376	55,559	60,513
Add: Capital Work in Progress-Closing Balance	17,573	20,325	20,441
Investment in Fixed Assets	67,949	75,884	80,954
Less Deferred Credits	29,869	31,323	33,095
Regulatory Assets Base	38,080	44,560	47,859
Average Regulatory Assets Base	35,565	41,320	46,209
Rate of Return	14.56%	14.56%	14.98%
Return on Rate Base	**5,178**	**6,016**	**6,922**

DESCRIPTION	FY 2018-19 (Prov.)		FY 2019-20 (Projected)	
	Distribution (Non-Sale Elements)	Rs./Kwh	Distribution (Non-Sale Elements)	Rs./Kwh
RORB	4,813	0.53	5,538	0.60

It is pertinent to mention here that weighted average yield on 05 years Pakistan Investment bond (PIB) as of July 24, 2019 is 13.7740% and 03 months KIBOR is 12.72% as on June 28, 2019 and considering the same value of market risk premium of 7% and beta of 1.10, the weighted average cost of capital comes 19.67%. Although PESCO has used WACC of 14.98% in its calculations, however Authority is requested to aloe 19.67% WACC to PESCO, as per above calculations.

viii) OTHER INCOME:

The main sources of other income include Interest Income, Sale of Scrape, Amortization of Deferred Credit, Rental & Service Income etc and for Distribution (Non-Sale Elements) it is assumed to be Rs. 1,889 million for the

FY 2018-19 and Rs. 2,020 million for FY 2019-20 excluding Wheeling Charges and Late Payment Surcharges.

DESCRIPTION	FY 2018-19 (Prov.)		FY 2019-20 (Projected)	
	Distribution (Non-Sale Elements)	Rs./Kwh	Distribution (Non-Sale Elements)	Rs./Kwh
Other Income	1,889	0.21	2,020	0.22
% Increase/ (Decrease)			7%	

Based on above the projected Distribution Margin (DM) for Distribution (Non-Sale Elements) for FY 2018-19 and FY 2019-20 would be as under:

Rs. in Million

Description	FY 2018-19 (Prov.)		FY 2019-20 (Projected)	
	Distribution (Non-Sale Elements)	Per Unit	Distribution (Non-Sale Elements)	Per Unit
O & M Expenses	14,370	1.58	15,739	1.71
Provision for Bad Debts	-	-	-	
Depreciation	2,766	0.30	3,042	0.33
RORB	4,813	0.53	5,538	0.60
Gross DM	**21,949**	**2.41**	**24,319**	**2.64**
Less: Other Income	(1,889)	(0.21)	(2,020)	(0.22)
Net DM	**20,060**	**2.21**	**22,299**	**2.41**

SUMMARY OF EVIDENCE & RELIEF SOUGHT:

a. RELIEF / DETERMINATION SOUGHT

In support of the petition in hand the standard formats are enclosed as per requirement;

- Approval of Category wise Tariff for FY 2018-19 & FY 2019-20 – Form 27
- Approval of Revenue Requirement for FY 2018-19 & FY 2019-20 – Form 20.
- Summary of Category wise Revenue Requirement for FY 2018-19 & FY 2019-20 - Form 27A.
- Annual Sale Growth in units (Category-Wise) – Annexure –B.
- Annual consumer Growth (Category-Wise) – Annexure – B.
- Any other relief.

b. KEY ASSUMPTIONS TO THE FINANCIAL PROJECTIONS/ RELIEF SOUGHT

- **Total Unit Sales:** The units projected for FY 2018-19 are 9,074 Million and 9,201 Million for FY 2019-20 against Audited units sold for FY 2017-18; 8,795 Million.
- **Target Transmission & Distribution Losses:** The losses are 37.1% for the FY 2018-19 and 36.5% for FY 2019-20.

That in view of the grounds and facts mentioned above, it is respectively prayed that while admitting and allowing this petition, the Tariff of PESCO for the FY 2018-19 & FY 2019-20 as per the actual expenditure of FY 2017-18 and provisional expenditure of FY 2018-19, may very graciously be determined as proposed, keeping in view the following:-

a. Ensuring the financial viability of the petitioner for the reliable supply of electricity to its over 3 Million consumers;
b. Timely Determination of Tariff along with its monthly adjustments or quarterly adjustments as proposed, providing sufficient time to the petitioner for the recovery of the Determined Revenue Requirement;
c. Fixing of target of T&D losses by taking a realistic approach;
d. Approving the investment plan of Rs. 11,007 Million for FY 2018-19 & Rs. 8,450 Million for FY 2019-20;
e. Allowing Rs. 20,060 Million for FY 2018-19 and Rs. 22,299 million for FY 2019-20 as Distribution Margin for Distribution (Non-Sale element),
f. Any other relief.

PETITIONER
THE PESHAWAR ELECTRIC SUPPLY COMPANY LTD
Through:
Dr. Muhammad Amjad Khan
Chief Executive Officer PESCO

FORM - 1 Distribution Business

Peshawar Electric Supply Company

Company Statistics

Peak demand during FY 2018-19	MW	3,296
Number of Consumers	Number	3.47 Million
Area	Sq Km	74,521
Circles	Number	8
Divisions	Number	39
Sub Divisions	Number	187

		Strength		Cost		Distribution Cost		Supply Cost	
		Jun-19	Jun-20	Jun-19	Jun-20	Jun-19	Jun-20	Jun-19	Jun-20
		Provisional	Projected	Provisional	Projected	Provisional	Projected	Provisional	Projected
	Number of Employees	14,392	14,593						
A	**Qualified Professionals**	**363**	**489**						
	Engineers	269	350						
	Others	94	139						
B	**Staff**	**14,029**	**14,104**						
	Technical	7,761	7,786						
	Clerical	1,265	1,290						
	Non Technical	5,003	5,028						
	Total			19,591	21,264	12,949	14,055	6,642	7,209

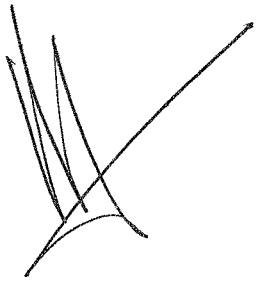

FORM - 2 **Distribution of electricity**

Peshawar Electric Supply Company

Profit & Loss Statement

		2018-19	2019-20
		Act/Prv	Projected
Revenue Earned from Wheeling of Electricity	[Mln Rs]	20,060	22,299
Total Sales Revenue	[Mln Rs]	**20,060**	**22,299**
Amortization of Def Credits	[Mln Rs]	1,889	2,020
Total Revenue	[Mln Rs]	**21,949**	**24,319**
Wheeling Charges Income (TESCO)	[Mln Rs]	1,976	2,150
Total Income Distribution Business	[Mln Rs]	**23,925**	**26,469**
Operating Cost		-	-
O&M Expenses	[Mln Rs]	14,370	15,739
Depreciation	[Mln Rs]	2,766	3,042
Total Operating Cost	[Mln Rs]	**17,136**	**18,781**
		-	-
EBIT	[Mln Rs]	**6,789**	**7,688**
EBT	[Mln Rs]	**6,789**	**7,688**
EAT	[Mln Rs]	**6,789**	**7,688**
Profit for the period	[Mln Rs]	**6,789**	**7,688**

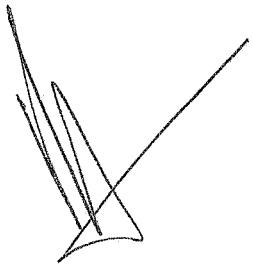

Distribution of Electricity

Profit & Loss Statement *(2018-19)*

Provisional

		Month 1	Month 2	Month 3	1st Qrt's Total	Month 4	Month 5	Month 6	2nd Qrt's Total	Month 7	Month 8	Month 9	3rd Qrt's Total	Month 10	Month 11	Month 12	4th Qrt's Total	Total
Power Balances																		
Revenue from Wheeling of Electricity	[Mln Rs]	1,880	2,059	2,009	5,948	1,757	1,526	1,364	4,647	1,427	1,483	1,374	4,284	1,463	1,681	2,037	5,181	20,060
Total Sales Revenue	[Mln Rs]	1,880	2,059	2,009	5,948	1,757	1,526	1,364	4,647	1,427	1,483	1,374	4,284	1,463	1,681	2,037	5,181	20,060
Amortization of Def Credits	[Mln Rs]	177	194	189	560	165	144	128	438	134	140	129	403	138	158	192	488	1,889
Total Revenue	[Mln Rs]	2,057	2,253	2,198	6,509	1,923	1,669	1,493	5,085	1,561	1,623	1,504	4,688	1,600	1,839	2,229	5,668	21,949
Wheeling Charges Income (TESCO)	[Mln Rs]	144	149	147	440	156	151	169	475	178	170	175	522	154	210	173	538	1,976
Operating Cost																		
O&M Expenses	[Mln Rs]	1,347	1,475	1,439	4,261	1,259	1,093	977	3,329	1,022	1,062	985	3,069	1,048	1,204	1,459	3,711	14,370
Depreciation	[Mln Rs]	259	284	277	820	242	210	188	641	197	204	190	591	202	232	281	714	2,766
Total Operating Cost	[Mln Rs]	1,606	1,759	1,716	5,081	1,501	1,303	1,165	3,970	1,219	1,267	1,174	3,660	1,249	1,436	1,740	4,425	17,136
EBIT	[Mln Rs]	596	643	629	1,868	577	517	496	1,590	520	526	505	1,550	505	613	662	1,781	6,789
EBT	[Mln Rs]	596	643	629	1,868	577	517	496	1,590	520	526	505	1,550	505	613	662	1,781	6,789
EAT	[Mln Rs]	596	643	629	1,868	577	517	496	1,590	520	526	505	1,550	505	613	662	1,781	6,789
Profit for the period	[Mln Rs]	596	643	629	1,868	577	517	496	1,590	520	526	505	1,550	505	613	662	1,781	6,789

* Where actual figures are available , these should be replaced by the actual figures.

Distribution of Electricity

Profit & Loss Statement *(2019-20)*

Projected

		Month 1	Month 2	Month 3	1st Qrt's Total	Month 4	Month 5	Month 6	2nd Qrt's Total	Month 7	Month 8	Month 9	3rd Qrt's Total	Month 10	Month 11	Month 12	4th Qrt's Total	Total
Revenue from Wheeling of Electricity	[Mln Rs]	2,111	2,309	2,253	6,674	1,967	1,704	1,514	5,185	1,583	1,667	1,548	4,797	1,702	1,810	2,131	5,643	22,299
Fuel Price Adjustment	[Mln Rs]	-	-	-	-	-	-	-	-	-	-	-	-	-	-	-	-	-
Total Sales Revenue	[Mln Rs]	2,111	2,309	2,253	6,674	1,967	1,704	1,514	5,185	1,583	1,667	1,548	4,797	1,702	1,810	2,131	5,643	22,299
Rental & Service Income	[Mln Rs]				-				-				-					-
Amortization of Def Credits	[Mln Rs]	191	209	204	605	178	154	137	470	143	151	140	435	154	164	193	511	2,020
Total Revenue	[Mln Rs]	2,303	2,519	2,458	7,279	2,145	1,859	1,651	5,654	1,726	1,818	1,688	5,232	1,856	1,974	2,324	6,154	24,319
Wheeling Charges Income (TESCO)	[Mln Rs]	204	223	217	644	190	164	146	500	153	161	149	463	164	175	205	544	2,150
Operating Cost																		
O&M Expenses	[Mln Rs]	1,490	1,630	1,590	4,711	1,388	1,203	1,068	3,659	1,117	1,176	1,092	3,386	1,201	1,278	1,504	3,983	15,739
Depreciation	[Mln Rs]	288	315	307	910	268	233	206	707	216	227	211	654	232	247	291	770	3,042
Total Operating Cost	[Mln Rs]	1,778	1,945	1,898	5,621	1,656	1,436	1,275	4,367	1,333	1,404	1,303	4,040	1,434	1,525	1,794	4,753	18,781
EBIT	[Mln Rs]	728	796	777	2,301	678	588	522	1,788	546	575	534	1,654	587	624	735	1,945	7,688
EBT	[Mln Rs]	728	796	777	2,301	678	588	522	1,788	546	575	534	1,654	587	624	735	1,945	7,688
EAT	[Mln Rs]	728	796	777	2,301	678	588	522	1,788	546	575	534	1,654	587	624	735	1,945	7,688
Profit for the period	[Mln Rs]	728	796	777	2,301	678	588	522	1,788	546	575	534	1,654	587	624	735	1,945	7,688

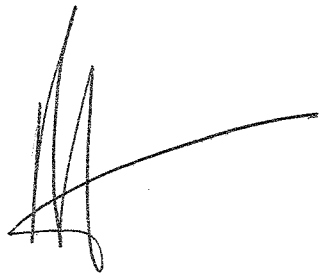

Peshawar Electric Supply Company — Distribution of Electricity

Balance Sheet [in million Rupees]

Description	Prov'nal 2018-19	Projected 2019-20
Intangible Fixed Assets		
Net Fixed Assets in Operations	55,559	60,513
Total Net Fixed Assets in Operations	**55,559**	**60,513**
Capital Work in Progress	20,325	20,441
Long Term Loans to Employees	9	12
Deferred Cost & Long Term Deposits		
	20,333	**20,453**
Current Assets		
Stores & Spares	4,497	4,184
Advances, Prepayments, Other Receivables	42,723	44,834
Cash & Bank Balances of Deposit	3,430	3,779
Total Current Assets	*50,649*	*52,796*
Total Assets	**126,542**	**133,761**
Subscribed Equity	18,082	18,082
Unappropriated Profit	(44,818)	(37,130)
Total Equity	*(26,736)*	*(19,048)*
Long Term Liability		
Liability against Govt Investment	13,466	13,466
Security Deposits	4,416	4,873
Employee Retirement Benefits	80,897	85,897
Deferred Credits	31,323	33,095
Total Long Term Loan		
Total Long Term Liability	*130,103*	*137,332*
Current Liability		
Current Maturity on Long Term Loans	2,344	2,644
Other Payable	8,918	10,918
Creditors, Accrued and Other Liabilities	11,913	25,017
Total Current Liability	*23,175*	*38,579*
Total Liabilities and Equity	**126,541**	**156,862**

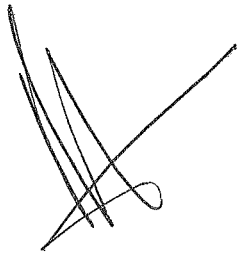

FORM - 5

Peshawar Electric Supply Company — Distribution of Electricity

Cash Flow Statement [in million Rupees]

Description	Prov'nal 2018-19	Projected 2019-20
Outflow from Operations		
Distribution Service Cost (=DMC)	14,370	15,739
Total Outflow from Operations	*14,370*	*15,739*
Surplus/Deficit from Operations		
Inflows from Other Sources		
Capital Contributions	2,109	2,611
Consumer Security Deposits	500	457
Other Incomes	1,976	2,150
Total Inflows from Other Sources	*4,585*	*5,218*
Outflow Others		
Investment Program	11,007	11,112
Working Capital/other Changes	(3,369)	(1,466)
Total Outflow Others	*7,638*	*9,646*
Surplus/Deficit Others		
Total Inflows (Operations + Others)	**22,438**	**25,733**
Total Outflows (Operations + Others)	**22,008**	**25,385**
Opening Balance	3,000	3,430
Surplus/Deficit for Fiscal Year	430	348
Deficit from Financing/Loans		
Closing Balance	**3,430**	**3,779**

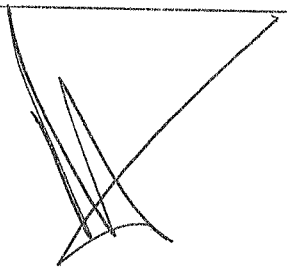

FORM - 7

Distribution Company

Distribution Company
Line Losses (Base Year) 2017-18

		Month 1 Actual	Month 2 Actual	Month 3 Actual	Month 4 Actual	Month 5 Actual	Month 6 Actual	Month 7 Actual	Month 8 Actual	Month 9 Actual	Month 10 Actual	Month 11 Actual	Month 12 Provisional	Total Provisional
Power Balances														
Units Received	[MkWh]	1362.3	1359.5	1300.8	1059.6	956.5	1158.9	1241.6	983.3	939.1	1072.6	1291.6	1499.5	14220.3
Units Sold	[MkWh]	834.6	853.7	862.4	795.7	678.2	616.2	645.5	660.6	620.7	674.4	714.3	839.1	8795.4
Units Lost	[MkWh]	527.7	505.8	438.4	263.9	278.3	537.7	596.1	322.7	318.4	398.2	577.3	660.4	5424.9
Units Lost	[%age]	39%	37%	34%	25%	29%	47%	48%	33%	34%	37%	45%	44%	38%
Technical Losses	[%age]	24%	25%	23%	20%	21%	17%	17%	18%	20%	21%	23%	23%	21%
Administrative Losses	[%age]	15%	12%	11%	05%	08%	30%	31%	15%	14%	16%	22%	21%	17%
Technical Losses at Different Levels														
Transmission Losses 132 kV	[%age]	01%	00%	03%	02%	02%	02%	03%	03%	04%	05%	03%	04%	03%
11 kV Losses	[%age]	18%	19%	15%	13%	15%	13%	11%	13%	13%	13%	16%	13%	15%
LT Losses	[%age]	05%	06%	05%	05%	05%	03%	02%	03%	03%	04%	04%	05%	04%
Total Technical Losses	[%age]	**24%**	**25%**	**23%**	**20%**	**21%**	**17%**	**17%**	**18%**	**20%**	**21%**	**23%**	**23%**	**21%**

Line Losses (Base Year) 2018-19

		Month 1 Actual	Month 2 Actual	Month 3 Actual	Month 4 Actual	Month 5 Actual	Month 6 Actual	Month 7 Actual	Month 8 Actual	Month 9 Actual	Month 10 Actual	Month 11 Actual	Month 12 Provisional	Total Provisional
Power Balances														
Units Received	[MkWh]	1536.0	1562.7	1360.9	1006.4	948.3	1078.7	1140.1	971.1	968.6	1015.2	1378.3	1461.0	**14427.3**
Units Sold	[MkWh]	850.4	931.4	908.8	794.8	690.1	617.1	645.3	670.8	621.7	661.6	760.2	921.5	**9073.7**
Units Lost	[MkWh]	685.6	631.3	452.1	211.6	258.2	461.6	494.8	300.3	346.9	353.6	618.1	539.5	**5353.6**
Units Lost	[%age]	45%	40%	33%	21%	27%	43%	43%	31%	36%	35%	45%	37%	36%
Technical Losses	[%age]	24%	25%	23%	20%	21%	17%	17%	18%	20%	21%	23%	23%	21%
Administrative Losses	[%age]	21%	15%	10%	01%	06%	26%	26%	13%	16%	14%	22%	14%	15%
Technical Losses at Different Levels														
Transmission Losses 132 kV	[%age]	03%	04%	03%	03%	03%	03%	03%	03%	03%	03%	03%	03%	03%
11 kV Losses	[%age]	15%	16%	15%	13%	14%	12%	12%	13%	14%	15%	16%	15%	14%
LT Losses	[%age]	05%	06%	05%	05%	05%	03%	02%	03%	03%	04%	04%	05%	04%
Total Technical Losses	[%age]	**24%**	**25%**	**23%**	**20%**	**21%**	**17%**	**17%**	**18%**	**20%**	**21%**	**23%**	**23%**	**21%**

FORM - 7 (A)

Distribution Company
Line Losses * (Projected) 2019-20

		Month 1	Month 2	Month 3	Month 4	Month 5	Month 6	Month 7	Month 8	Month 9	Month 10	Month 11	Month 12	Total
Power Balances														
Units Received	[MkWh]	1550	1578	1374	1015	953	1076	1114	945	944	1086	1312	1527	14473
Units Sold	[MkWh]	872	953	930	811	703	625	653	688	639	702	747	879	9201
Units Lost	[MkWh]	678	625	444	204	250	451	479	258	306	384	565	648	5290
Units Lost	[%age]	44%	40%	32%	20%	26%	42%	43%	27%	32%	35%	43%	42%	36%
Technical Losses	[%age]	24%	25%	23%	19%	20%	17%	17%	18%	20%	21%	23%	23%	21%
Administrative Losses	[%age]	20%	15%	09%	01%	06%	25%	26%	09%	13%	14%	20%	19%	15%
Technical Losses at Different Levels														
Transmission Losses 132 kV	[%age]	04%	04%	04%	03%	04%	04%	03%	03%	04%	03%	04%	04%	04%
11 kV Losses	[%age]	15%	16%	15%	12%	13%	11%	11%	12%	13%	15%	14%	13%	13%
LT Losses	[%age]	05%	06%	04%	04%	04%	03%	03%	03%	03%	03%	05%	06%	04%
Total Technical Losses	[%age]	**24%**	**25%**	**23%**	**19%**	**20%**	**17%**	**17%**	**18%**	**20%**	**21%**	**23%**	**23%**	**21%**

FORM - 8

Operational and Technical Information

DISCO load factors on yearly basis		61%
NTDC/DISCO Delivery Points metering accuracy		100%
DISCO metering accuracy		
For all customers (residential, commercial, industrial, etc.)	All OK with ±	2.50%
Estimated High Voltage Transmission lines losses (132 kV)		4.02%

FORM - 9

Peshawar Electric Supply Company

Average Rate per Unit Purchased and Sold

- Weighted Average Cost per Unit Sold to Customers

Distribution of Electricity

2018-19

10.17	Estimated Energy Sold	9,074
10.19	Distribution Margin	20,060
10.20	Distribution Margin per Unit Sold = (10.19 / 10.17)	2.21

FORM - 9

Peshawar Electric Supply Company

Average Rate per Unit Purchased and Sold

- Weighted Average Cost per Unit Sold to Customers

Distribution of Electricity

2019-20

10.19	Distribution Margin	22,299
10.20	Distribution Margin per Unit Sold = (10.19 / 10.17)	2.42

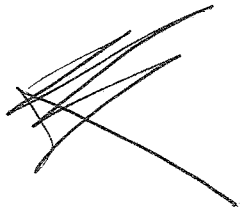

FORM - 17

Peshawar Electric Supply Company

Distribution Margin Comparison

	Projected 2018-19	Projected 2019-20
O&M Expenses	14,370	15,739
Increase in %	-	10%
Depreciation	2,766	3,042
RORB	6,016	6,922
Income Tax	-	-
Other Income	(1,889)	(2,020)
Distribution Margin	**21,263**	**23,682**
Energy Sold	9,074	9,200
DM per unit	**2.34**	**2.57**
DM per unit increase %	-	10%

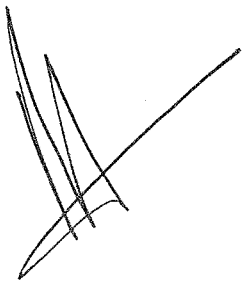

FORM - 18 Distribution of Electricity

Peshawar Electric Supply Company

Financial Charges

Rs. In Mln

		2017-18 Audited	2018-19 Projected	2019-20 Projected
A	**Long Term Loans**			
	GOP loans			
	Foreign Loans	145	175	275
	Bonds			
	TFCs			
	Others			
	Total	**145**	**175**	**275**
B	**Short Term Loan**			
	Running Finance			
	Short Term Loan			
	Others	-	-	-
	Total	-	-	-
C	**Total Financial Charges (A+B)**	**145**	**175**	**275**

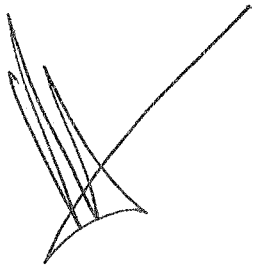

FORM - 19

Peshawar Electric Supply Company

RORB Calculation

Distribution of Electricity

	Description		Audited 2017-18	Prov'nal 2018-19	Projected 2019-20
A	Gross Fixed Assets in Operation - Opening Bal	[Mln Rs]	66,682	76,825	85,081
B	Addition in Fixed Assets	[Mln Rs]	10,144	8,255	8,334
C	Gross Fixed Assets in Operation - Closing Bal	[Mln Rs]	**76,825**	**85,081**	**93,414**
D	*Less*: Accumulated Depreciation	[Mln Rs]	26,449	29,522	32,902
E	Net Fixed Assets in Operation	[Mln Rs]	**50,376**	**55,559**	**60,513**
F	*Add*: Capital Work In Progress - Closing Bal	[Mln Rs]	17,573	20,325	20,441
G	Investment in Fixed Assets	[Mln Rs]	**67,949**	**75,884**	**80,954**
H	*Less*: Deferred Credits	[Mln Rs]	29,869	31,323	33,095
I	Regulatory Assets Base	[Mln Rs]	**38,080**	**44,560**	**47,858**
J	Average Regulatory Assets Base	[Mln Rs]	**35,565**	**41,320**	**46,209**
	Rate of Return	[%age]	14.56%	14.56%	14.98%
	Return on Rate Base	[Mln Rs]	**5,178**	**6,016**	**6,922**

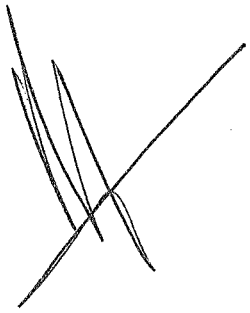

FORM - 20

Peshawar Electric Supply Company — Distribution of Electricity

Revenue Requirement

			2017-18 Audited	2018-19 Projected	2019-20 Projected
A	**Power Purchase Price**	[Mln Rs]	-	-	-
B	**DM**				
	O&M	[Mln Rs]	21,386	14,370	15,739
	Depreciation	[Mln Rs]	2,644	2,766	3,042
	RORB	[Mln Rs]	5,178	6,016	6,922
	Other Income	[Mln Rs]	(2,522)	(1,889)	(2,020)
	Impact of Disallowed Losses	[Mln Rs]	-	-	-
	Total DM	[Mln Rs]	**26,686**	**21,263**	**23,683**
C	**Wheeling Charges Income (TESCO)**	[Mln Rs]	-	-	-
D	**Revenue Requirement (A+B+C)**	[Mln Rs]	**26,686**	**21,263**	**23,683**
E	Financial Charges	[Mln Rs]	-	-	-
F	Less/ (Excess) Recovery PYA/Turn over t	[Mln Rs]	-	-	-
G	**Total Revenue Requirement (D+E+F)**	[Mln Rs]	**26,686**	**21,263**	**23,683**

FORM - 20 (A)

Revenue Requirement *(per unit sold)*

			2017-18 Audited	2018-19 Projected	2019-20 Projected
A	**Power Purchase Price**	[Rs/ kWh]	8,795	9,074	9,200
B	**DM**		-	-	-
	O&M	[Rs/ kWh]	2.43	1.58	1.71
	Depreciation	[Rs/ kWh]	0.30	0.30	0.33
	RORB	[Rs/ kWh]	0.59	0.66	0.75
	Other Income	[Rs/ kWh]	(0.29)	(0.21)	(0.22)
	Impact of Disallowed Losses	[Rs/ kWh]			
	Total DM	[Rs/ kWh]	**3.03**	**2.34**	**2.57**
C	**Wheeling Charges**				
D	**Revenue Requirement (A+B+C)**	[Rs/ kWh]	**3.03**	**2.34**	**2.57**
E	Financial Charges	[Rs/ kWh]	-	-	-
F	Less/ (Excess) Recovery PYA/Turn over t	[Rs/ kWh]	-	-	-
G	**Total Revenue Requirement (D+E+F)**	[Rs/ kWh]	**3.03**	**2.34**	**2.57**

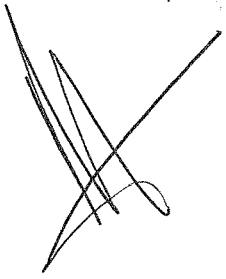

Peshawar Electric Supply Company

Investment

Distribution of Electricity

		2018-19 Provisional	2019-20 Projected
A	**Investment Plan**		
	DOP	[Mln Rs] 3,000	2,500
	ELR	[Mln Rs] 2,000	1,500
	STG	[Mln Rs] 3,200	3,500
	Electrification work at different valleys of district Chitral 132KV Grid system & upgrdation of 33KV Grid System in District Chitral	[Mln Rs] -	150
	ABC Cable for Peshawar, Khyber & Bannu Circle	[Mln Rs] -	150
	Evacuation of Power from 220/132KV Grid Station Swabi	[Mln Rs] -	350
	Village Electrification	[Mln Rs] -	300
	Others Projects	[Mln Rs] 1,880	-
	Total	[Mln Rs] 927	-
		[Mln Rs] 11,007	8,450
B	**Financing Arrangement**		
	Local	[Mln Rs]	
	Loan	[Mln Rs] 927	950
	PSDP / Own Resources	[Mln Rs] 5,800	5,500
	Grant	[Mln Rs]	
	Consumer Contribution	[Mln Rs] 2,400	2,000
	Others (Please Mention)	[Mln Rs] 1,880	
	Total	[Mln Rs] 11,007	8,450

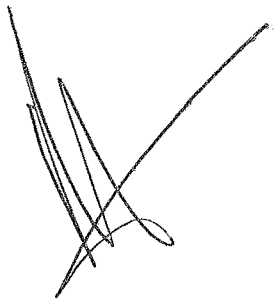

FORM - 22

Peshawar Electric Supply Company

Interest on Development Loans

Distribution of Electricity

Rs. Million

Sr. No.	Loans	Interest Rate %	FY 2018-19 Annual	FY 2019-20 Annual
1	Power Distribution Enhancement Project ADB Loan 2438-PAK	17%	102	178
2	ERRA ADB LOAN No. 2213 PAK	1%	8	8
3	Power Distribution Enhancement Project ADB Loan 2727-PAK	15%	20	20
4	Power Distribution Enhancement Project ADB Loan 2972-PAK	15%	25	20
5	Power Distribution Enhancement Project ADB Loan 3096-PAK	15%	20	49
	Total		175	275

FORM - 23

Peshawar Electric Supply Company

DEVOLPOMENT LOAN FOR FY 2018-19

Rs.In Million

Sr. No.	Loan	Interest Rate	2018-19				
			O/Bal	Disbursement	Interest	Repayment	C/Bal
1	Power Distribution Enhancement Project ADB Loan 2438-PAK	17.00%	1,933	-	8	8	1,933
2	ERRA ADB LOAN No. 2213 PAK	1.00%	985	-	336	-	1,321
3	Power Distribution Enhancement Project ADB Loan2727-PAK	15.00%	1,272	-	-	-	1,271
4	Power Distribution Enhancement Project ADB Loan-PAK 2972	15.00%	1,592	294	-	-	1,886
5	Power Distribution Enhancement Project ADB Loan -PAK 3096	15.00%	1,448	417	-	-	1,865
6	TFC Loan through Power Holding Pvt Ltd (136 Billion)		22,462	-	1,162	-	23,624
7	PPTFC (82 Billion)	KIBOR + 1 to 3%	12,923	-	515	-	13,439
8	PPTFC (15 Billion)		2,364	-	922	-	3,286
9			-	-	-	-	-
	Current Maturity of Long term Loans		(1,857)				(2,344)
			43,121	711	2,944	8	46,281

ANNEX-

PESHAWAR ELECTRIC SUPPLY COMPANY

Phone No. 091-9210226
Fax No. 091-9223136
Email: sec.pesco@gmail.com

Office of the
Company Secretary PESCO
Room No.158 Wapda House,
Shami Road, Peshawar

BOARD RESOLUTION

Board of Directors Peshawar Electric Supply Company Limited in its **135th** BoD meeting held on 01-08-2019 has authorized Chief Executive Officer of the Company to file the **Tariff Petition for Financial Year 2018-19 and FY 2019-20,** review motion and subsequent adjustments (if required) with National Electric Power Regularity Authority (NEPRA).

He along with other officers of the Company are hereby authorized to sign individually or jointly the necessary documents, appear before the Authority when needed and do all acts necessary for completion and processing of the application.

Certified True Copy

COMPANY SECRETARY
PESCO

Dated 01-08-2019

/D:\Tahir File

154

G725276

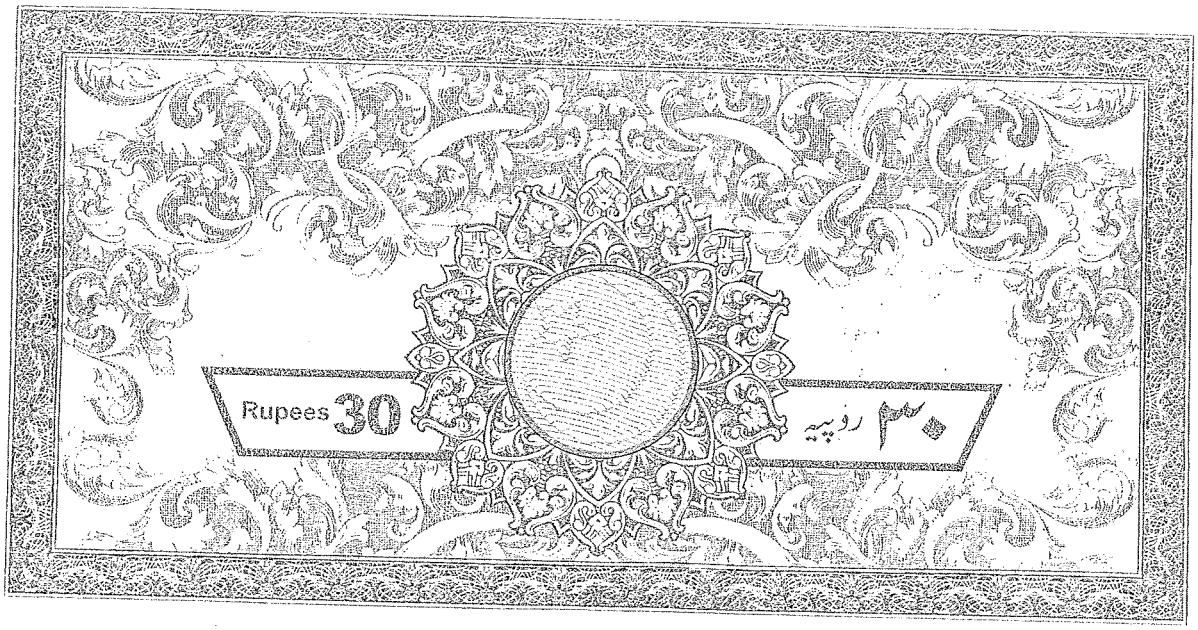

AFFIDAVIT

I Muhammad Amjad Khan S/O Mukaram Khan Chief Executive Officer, Peshawar Electric Supply Company Limited (Distribution License No. 07/DL/2002) holding NIC No. 17301-1389963-5 being duly authorized representative/Attorney of Peshawar Electric Supply Company Limited, hereby solemnly affirm and declare that the contents of this Tariff Petition for FY 2018-19 & FY 2019-20 including all supporting documents are true and correct to the best of my knowledge and belief and that nothing has been concealed.

Deponent

(Muhammad Amjad Khan)
Chief Executive Officer
PESCO

Dated: 30 / 08 /2019

ATTESTED
Muhammad Shafqat Advocate
NOTARY PUBLIC
Distt: Courts Peshawar

ANNEX-C

National Electric Power Regulatory Authority
Islamic Republic of Pakistan

Registrar

NEPRA Tower, Attaturk Avenue (East), G-5/1, Islamabad.
Ph: +92-51-9206500, Fax: +92-51-2600026
Web: www.nepra.org.pk, E-mail: registrar@nepra.org.pk

No. NEPRA/TRF-436/18354-18356
November 22, 2018

Subject: **Decision of the Authority in the matter of Review Motion filed by Peshawar Electric Supply Company Ltd. (PESCO) against its Consumer-end Tariff Determination for the FY 2016-17 & 2017-18** [Case # NEPRA/TRF-436]

Dear Sir,

Please find enclosed herewith the subject Decision of the Authority (03 pages) in the matter of Motion filed by Peshawar Electric Supply Company Ltd. (PESCO) against its Consumer-end Tariff Determination for the FY 2016-17 & 2017-18 in Case # NEPRA/TRF-436, for information.

Enclosure: As above

22/11/18

(Iftikhar Ali Khan)

Secretary
Ministry of Energy (Power Division)
'A' Block, Pak Secretariat
Islamabad

CC:

1. Secretary, Cabinet Division, Cabinet Secretariat, Islamabad.
2. Secretary, Ministry of Finance, 'Q' Block, Pak Secretariat, Islamabad.

Turn over Tax and CPPA-G Overheads

5. Regarding Turn over tax and CPPA-G overheads, the Petitioner has brought credible evidence on record. However, the Petitioner itself agreed during the hearing to allow these costs in in its subsequent revenue requirements considering the fact that consumer-end tariff notification process is in its advanced stages. The Authority accepts the proposal of the Petitioner to consider these costs in the next revenue requirement of the Petitioner i.e. FY 2018-19.

Amortization of Deferred credit

6. Regarding amortization of deferred credit, the Petitioner submitted that the Authority has allowed a gross distribution margin of Rs.21,336 million for the FY 2017-18 and a net distribution margin of Rs.19,177 million, after deduction of other income of Rs.2,160 million. The Petitioner further submitted that the purpose of deduction of other income is to give benefit to the consumers on account of profit on bank deposits, amortization of deferred credits, meter rent, service rent, scrap sales etc. Since the gross distribution margin is the cash flow required by the company, hence deduction of amortization of deferred credits from the gross distribution margin is adversely affecting its cash flows. The Petitioner further stated that amortization of deferred credit is a non-cash adjustment and no cash flows are generated by PESCO under this head; by deducting the same through other income, results in cash shortfall which adversely affects the cash flows.

7. The Authority observed that the Petitioner perhaps does not fully comprehend the issue of deferred credits and its amortization. Deferred credits are consumer financed assets i.e. built through finances provided by the consumers, and does not involve any cash flow out of the Petitioner's pocket. Therefore, the Petitioner shall not be allowed to recover its principal/ capital costs through depreciation. However, the Authority while determining the gross distribution margin includes the entire amount of depreciation charges inclusive of amortization of deferred credits, whereas, the Petitioner's actual cost shall only include the amount of depreciation charges for the assets built by the Petitioner itself. Thus, in a way the Gross Distribution margin results in over recovery by the Petitioner to the extent of amount of amortization of deferred credits included therein. Therefore, in order to offset the impact of this extra amount, the Authority deducts the amount of amortization of deferred credits by making it a part of Other Income. Thus, the plea of the Petitioner that deduction of amortization of deferred credits results in cash shortfall is not correct as no cash outflow has occurred on the Petitioner's part when the aforementioned consumer financed assets were procured. Here it is also

NATIONAL ELECTRIC POWER REGULATORY AUTHORITY NEPRA AUTHORITY

ACKNOWLEDGEMENT SLIP

114(1) (Return of Income filed voluntarily for complete year)

Name: PESHAWAR ELECTRIC SUPPLY COMPANY LIMITED
Address: WAPDA HOUSE SHAMI ROAD .

Contact No: 00923158300481

100000028192570

Registration No 2228080
Tax Year : 2017
Period : 01-Jul-2016 - 30-Jun-2017
Medium : Online
Due Date : 31-Dec-2017
Document Date 31-Dec-2017

Description	Code	Amount
Tax Chargeable	9200	840,003,911.00

This is not a valid evidence of being a "filer" for the purposes of clauses (23A) and (35C) of sections 2 and 181A.

Annex - C

Print Date: Tue, 17 Jul 2018 13:08:11

Copyright © 2011 All rights reserved Federal Board of Revenue - Government of Pakistan.

759

114(1) (Return of Income filed voluntarily for complete year)

Name: PESHAWAR ELECTRIC SUPPLY COMPANY LIMITED
Address: WAPDA HOUSE SHAMI ROAD .

Contact No: 00923158300481

100000028192570

Registration No 2228080
Tax Year : 2017
Period : 01-Jul-2016 - 30-Jun-2017
Medium : Online
Due Date : 31-Dec-2017
Document Date 31-Dec-2017

Manufacturing / Trading Items

Description	Code	Total Amount	Amount Exempt from Tax / Subject to Fixed / Final Tax	Amount Subject to Normal Tax
Income / (Loss) from Business	3000	-15,096,098,714.00	0.00	-15,096,098,714.00
Net Revenue (excluding Sales Tax, Federal Excise, Brokerage, Commission, Discount, Freight Outward)	3029	78,471,841,054.00	0.00	78,471,841,054.00
Gross Revenue (excluding Sales Tax, Federal Excise)	3009	78,471,841,054.00	0.00	78,471,841,054.00
Gross Domestic Sales / Services Fee	3004	78,471,841,054.00	0.00	78,471,841,054.00
Cost of Sales / Services	3030	108,053,030,275.00	0.00	108,053,030,275.00
Direct Expenses	3089	108,053,030,275.00	0.00	108,053,030,275.00
Other Direct Expenses	3083	108,053,030,275.00	0.00	108,053,030,275.00
Gross Profit / (Loss)	3100	-29,581,189,221.00	0.00	-29,581,189,221.00

Other Revenues

Description	Code	Total Amount	Amount Exempt from Tax / Subject to Fixed / Final Tax	Amount Subject to Normal Tax
Other Revenues	3129	37,239,272,534.00	0.00	37,239,272,534.00
Profit on Debt	3106	48,143,199.00	0.00	48,143,199.00
Accounting Gain on Sale of Assets	3116	5,412,000.00	0.00	5,412,000.00
Others	3128	37,185,717,335.00	0.00	37,185,717,335.00

Management, Administrative, Selling & Financial Expenses

Description	Code	Total Amount	Amount Exempt from Tax / Subject to Fixed / Final Tax	Amount Subject to Normal Tax
Management, Administrative, Selling & Financial Expenses	3199	26,202,458,910.00	0.00	26,202,458,910.00
Rates / Taxes / Cess	3152	41,370,186.00	0.00	41,370,186.00

Copyright © 2014 All rights reserved Federal Board of Revenue - Government of Pakistan

160

114(1) (Return of Income filed voluntarily for complete year)

Name: PESHAWAR ELECTRIC SUPPLY COMPANY LIMITED
Address: WAPDA HOUSE SHAMI ROAD .

Contact No: 00923158300481

100000028192570

Registration No 2228080
Tax Year : 2017
Period : 01-Jul-2016 - 30-Jun-2017
Medium : Online
Due Date : 31-Dec-2017
Document Date 31-Dec-2017

Management, Administrative, Selling & Financial Expenses

Description	Code	Total Amount	Amount Exempt from Tax / Subject to Fixed / Final Tax	Amount Subject to Normal Tax
Salaries / Wages / Perquisites / Benefits	3154	13,621,403,837.00	0.00	13,621,403,837.00
Traveling / Conveyance / Vehicles Running / Maintenance	3155	348,410,199.00	0.00	348,410,199.00
Electricity / Water / Gas	3158	32,242,439.00	0.00	32,242,439.00
Communication	3162	36,103,055.00	0.00	36,103,055.00
Repair / Maintenance	3165	735,820,503.00	0.00	735,820,503.00
Stationery / Printing / Photocopies / Office Supplies	3166	163,561,604.00	0.00	163,561,604.00
Advertisement / Publicity / Promotion	3168	2,802,399.00	0.00	2,802,399.00
Insurance	3170	16,184,544.00	0.00	16,184,544.00
Professional Charges	3171	31,765,493.00	0.00	31,765,493.00
Profit on Debt (Financial Charges / Markup / Interest)	3172	2,460,986,621.00	0.00	2,460,986,621.00
Other Indirect Expenses	3180	266,621,869.00	0.00	266,621,869.00
Provision for Doubtful / Bad Debts	3191	6,090,322,933.00	0.00	6,090,322,933.00
Provision for Obsolete Stocks / Stores / Spares / Fixed Assets	3192	62,199,777.00	0.00	62,199,777.00
Irrecoverable Debts Written off	3186	94,963.00	0.00	94,963.00
Accounting Depreciation	3198	2,292,568,488.00	0.00	2,292,568,488.00
Accounting Profit / (Loss)	3200	-18,544,375,597.00	0.00	-18,544,375,597.00

Inadmissible / Admissible Deductions

Description	Code	Total Amount	Amount Exempt from Tax / Subject to Fixed / Final Tax	Amount Subject to Normal Tax
Inadmissible Deductions	3239	8,445,091,198.00	0.00	8,445,091,198.00
Add Backs u/s 29(2) Provision for Doubtful Debts	3201	6,090,322,933.00	0.00	6,090,322,933.00
Add Backs Provision for Obsolete Stocks / Stores /	3202	62,199,777.00	0.00	62,199,777.00

Copyright © 2014 All rights reserved Federal Board of Revenue - Government of Pakistan

161

114(1) (Return of Income filed voluntarily for complete year)

Name: PESHAWAR ELECTRIC SUPPLY COMPANY LIMITED
Address: WAPDA HOUSE SHAMI ROAD .

Contact No: 00923158300481

100000028192570

Registration No 2228080
Tax Year : 2017
Period : 01-Jul-2016 - 30-Jun-2017
Medium : Online
Due Date : 31-Dec-2017
Document Date 31-Dec-2017

Inadmissible / Admissible Deductions

Description	Code	Total Amount	Amount Exempt from Tax / Subject to Fixed / Final Tax	Amount Subject to Normal Tax
Spares / Fixed Assets	3202	62,199,777.00	0.00	62,199,777.00
Add Backs Accounting Depreciation	3238	2,292,568,488.00	0.00	2,292,568,488.00
Admissible Deductions	3259	4,996,814,315.00	0.00	4,996,814,315.00
Accounting Gain on Sale of Assets	3246	5,412,000.00	0.00	5,412,000.00
Tax Amortization for Current Year	3247	0.00	0.00	0.00
Tax Depreciation / Initial Allowance for Current Year	3248	4,991,402,315.00	0.00	4,991,402,315.00

Adjustments

Description	Code	Total Amount	Amount Exempt from Tax / Subject to Fixed / Final Tax	Amount Subject to Normal Tax
Income / (Loss) from Business before adjustment of Admissible Depreciation / Initial Allowance / Amortization for current / previous years	3270	0.00	0.00	-10,104,696,399.00

Business Assets / Equity / Liabilities

Description	Code	Amount		
Total Assets	3349	257,872,573,578.00	0.00	0.00
Land	3301	644,844,340.00	0.00	0.00
Building (all types)	3302	2,000,737,628.00	823,441,052.00	0.00
Plant / Machinery / Equipment / Furniture (including fittings)	3303	40,027,520,626.00	0.00	0.00
Motor Vehicle	3304	197,697,450.00	0.00	0.00
Capital Work in Progress	3308	16,369,719,327.00	0.00	0.00
Long Term Investments	3311	26,296,167.00	0.00	0.00
Advances / Deposits / Prepayments	3312	57,641,970,097.00	0.00	0.00
Trade Debtors / Receivables	3313	52,710,999,79	0.00	0.00

Copyright © 2014 All rights reserved Federal Board of Revenue - Government of Pakistan.

162

114(1) (Return of Income filed voluntarily for complete year)

Name: PESHAWAR ELECTRIC SUPPLY COMPANY LIMITED
Address: WAPDA HOUSE SHAMI ROAD .

Contact No: 00923158300481

100000028192570

Registration No 2228080
Tax Year : 2017
Period : 01-Jul-2016 - 30-Jun-2017
Medium : Online
Due Date : 31-Dec-2017
Document Date 31-Dec-2017

Business Assets / Equity / Liabilities

Description	Code	Amount		
Trade Debtors / Receivables	3313	8.00	0.00	0.00
Stocks / Stores / Spares	3315	3,519,064,368.00	0.00	0.00
Short Term Advances / Deposits / Prepayments	3317	934,844,279.00	0.00	0.00
Cash / Cash Equivalents	3319	3,689,693,912.00	0.00	0.00
Other Assets	3348	80,109,185,586.00	0.00	0.00
Total Equity / Liabilities	3399	257,872,573,578.00	0.00	0.00
Authorized Capital	3351	50,000,000,000.00	0.00	0.00
Issued, Subscribed & Paid up capital	3352	10,000.00	0.00	0.00
Share Deposit Money	3353	18,082,025,791.00	0.00	0.00
Accumulated Profits	3364	-177,101,619,083.00	0.00	0.00
Long Term Borrowings / Debt / Loan	3371	92,144,968,626.00	0.00	0.00
Deferred Liabilities	3373	68,186,898,669.00	0.00	0.00
Provisions / Contingencies	3374	827,561,110.00	0.00	0.00
Current Portion of Long Term Liabilities	3382	34,375,190,205.00	0.00	0.00
Advances / Deposits / Accrued Expenses	3383	10,564,981,549.00	0.00	0.00
Trade Creditors / Payables	3384	210,792,556,711.00	0.00	0.00

Adjustable Tax

Description	Code	Receipts / Value	Tax Collected / Deducted	Tax Chargeable
Adjustable Tax	640000	0.00	101,491,163.00	0.00
Import u/s 148 @5.5%	64010011	0.00	95,628,401.00	0.00
Cash Withdrawal from Bank u/s 231A	64100101	0.00	4,570,058.00	0.00
Cash Withdrawal from Bank u/s 231A - 10000720740019	64100101	0.00	24,601.00	0.00
Cash Withdrawal from Bank u/s 231A - 10023065140010	64100101	0.00	41,252.00	0.00
Cash Withdrawal from Bank u/s 231A - 10006889810016	64100101	0.00	192,309.00	0.00

Print Date: Tue, 17 Jul 2018 13:08:11

Copyright © 2014 All rights reserved Federal Board of Revenue - Government of Pakistan

163

114(1) (Return of Income filed voluntarily for complete year)

Name: PESHAWAR ELECTRIC SUPPLY COMPANY LIMITED
Address: WAPDA HOUSE SHAMI ROAD .

Contact No: 00923158300481

100000028192570

Registration No 2228080
Tax Year : 2017
Period : 01-Jul-2016 - 30-Jun-2017
Medium : Online
Due Date : 31-Dec-2017
Document Date 31-Dec-2017

Adjustable Tax

Description	Code	Receipts / Value	Tax Collected / Deducted	Tax Chargeable
Cash Withdrawal from Bank u/s 231A - 10005295480015	64100101	0.00	42,980.00	0.00
Cash Withdrawal from Bank u/s 231A - 10005035610024	64100101	0.00	186,006.00	0.00
Cash Withdrawal from Bank u/s 231A - 10001691250084	64100101	0.00	628,399.00	0.00
Cash Withdrawal from Bank u/s 231A - 10001691250294	64100101	0.00	121,387.00	0.00
Cash Withdrawal from Bank u/s 231A - 10000016	64100101	0.00	44,487.00	0.00
Cash Withdrawal from Bank u/s 231A - 5070010522803	64100101	0.00	36,939.00	0.00
Cash Withdrawal from Bank u/s 231A - 1111111111111	64100101	0.00	32,335.00	0.00
Cash Withdrawal from Bank u/s 231A - 1111111111111	64100101	0.00	4,259.00	0.00
Cash Withdrawal from Bank u/s 231A - 28118	64100101	0.00	5,817.00	0.00
Cash Withdrawal from Bank u/s 231A - 7900407003	64100101	0.00	402,536.00	0.00
Cash Withdrawal from Bank u/s 231A - 3003896492	64100101	0.00	19,624.00	0.00
Cash Withdrawal from Bank u/s 231A - 7900335703	64100101	0.00	225.00	0.00
Cash Withdrawal from Bank u/s 231A - 901530	64100101	0.00	12,303.00	0.00
Cash Withdrawal from Bank u/s 231A - 10001691250157	64100101	0.00	18,274.00	0.00
Cash Withdrawal from Bank u/s 231A - 64417903	64100101	0.00	660.00	0.00
Cash Withdrawal from Bank u/s 231A - 64425003	64100101	0.00	894.00	0.00
Cash Withdrawal from Bank u/s 231A - 52923003	64100101	0.00	9,611.00	0.00
Cash Withdrawal from Bank u/s 231A - 284030100000345	64100101	0.00	6,579.00	0.00
Cash Withdrawal from Bank u/s 231A - 284030100000345	64100101	0.00	5,723.00	0.00
Cash Withdrawal from Bank u/s 231A - 284030100000353	64100101	0.00	12,932.00	0.00
Cash Withdrawal from Bank u/s 231A - 284030100000361	64100101	0.00	9,098.00	0.00
Cash Withdrawal from Bank u/s 231A - 11111111111111	64100101	0.00	7,260.00	0.00
Cash Withdrawal from Bank u/s 231A - 91250220	64100101	0.00	192,005.00	0.00
Cash Withdrawal from Bank u/s 231A - 250213	64100101	0.00	72,743.00	0.00
Cash Withdrawal from Bank u/s 231A - 250350	64100101	0.00	115,607.00	0.00
Cash Withdrawal from Bank u/s 231A - 02250007174701	64100101	0.00	100,695.00	0.00
Cash Withdrawal from Bank u/s 231A - 02257900033801	64100101	0.00	6,003.00	0.00
Cash Withdrawal from Bank u/s 231A - 02257900033701	64100101	0.00	440,782.00	0.00
Cash Withdrawal from Bank u/s 231A - 02257900046201	64100101	0.00	210,758.00	0.00
Cash Withdrawal from Bank u/s 231A - 02250050001701	64100101	0.00	52,758.00	0.00
Cash Withdrawal from Bank u/s 231A - 0010001691250220	64100101	0.00	192,004.00	0.00
Cash Withdrawal from Bank u/s 231A - 0010001691250213	64100101	0.00	72,743.00	0.00

Print Date: Tue, 17 Jul 2018 13:08:11

Copyright © 2014 All rights reserved Federal Board of Revenue - Government of Pakistan.

164

114(1) (Return of Income filed voluntarily for complete year)

Name: PESHAWAR ELECTRIC SUPPLY COMPANY LIMITED
Address: WAPDA HOUSE SHAMI ROAD .

Contact No: 00923158300481

100000028192570

Registration No 2228080
Tax Year : 2017
Period : 01-Jul-2016 - 30-Jun-2017
Medium : Online
Due Date : 31-Dec-2017
Document Date 31-Dec-2017

Adjustable Tax

Description	Code	Receipts / Value	Tax Collected / Deducted	Tax Chargeable
Cash Withdrawal from Bank u/s 231A - 0010001691250350	64100101	0.00	115,607.00	0.00
Cash Withdrawal from Bank u/s 231A - 0010001691250084	64100101	0.00	628,399.00	0.00
Cash Withdrawal from Bank u/s 231A - 0010001691250259	64100101	0.00	13,558.00	0.00
Cash Withdrawal from Bank u/s 231A - 012001010178	64100101	0.00	11,941.00	0.00
Cash Withdrawal from Bank u/s 231A - 15308	64100101	0.00	23,557.00	0.00
Cash Withdrawal from Bank u/s 231A - 0010024600260012	64100101	0.00	29,491.00	0.00
Cash Withdrawal from Bank u/s 231A - 0010005071620714	64100101	0.00	37,019.00	0.00
Cash Withdrawal from Bank u/s 231A - 0010003899900017	64100101	0.00	3,001.00	0.00
Cash Withdrawal from Bank u/s 231A - 5489370	64100101	0.00	35,225.00	0.00
Cash Withdrawal from Bank u/s 231A - 9015	64100101	0.00	28,729.00	0.00
Cash Withdrawal from Bank u/s 231A - 0010027578520019	64100101	0.00	7,452.00	0.00
Cash Withdrawal from Bank u/s 231A - 0010001691250417	64100101	0.00	16,862.00	0.00
Cash Withdrawal from Bank u/s 231A - 0010001691250128	64100101	0.00	27,208.00	0.00
Cash Withdrawal from Bank u/s 231A - 0010017993920018	64100101	0.00	18,129.00	0.00
Cash Withdrawal from Bank u/s 231A - 0010023065950010	64100101	0.00	13,210.00	0.00
Cash Withdrawal from Bank u/s 231A - 099001026601	64100101	0.00	214,525.00	0.00
Cash Withdrawal from Bank u/s 231A - 15308	64100101	0.00	23,557.00	0.00
Private Vehicle Tax u/s 234	64130003	0.00	699,858.00	0.00
Private Vehicle Tax u/s 234 - M3884	64130003	0.00	565.00	0.00
Private Vehicle Tax u/s 234 - R4531	64130003	0.00	565.00	0.00
Private Vehicle Tax u/s 234 - A2994	64130003	0.00	6,565.00	0.00
Private Vehicle Tax u/s 234 - B5443	64130003	0.00	6,565.00	0.00
Private Vehicle Tax u/s 234 - A2945	64130003	0.00	3,565.00	0.00
Private Vehicle Tax u/s 234 - M4121	64130003	0.00	6,565.00	0.00
Private Vehicle Tax u/s 234 - R2130	64130003	0.00	6,565.00	0.00
Private Vehicle Tax u/s 234 - A2995	64130003	0.00	6,565.00	0.00
Private Vehicle Tax u/s 234 - M4470	64130003	0.00	6,565.00	0.00

Copyright © 2011 All rights reserved Federal Board of Revenue - Government of Pakistan

165

114(1) (Return of Income filed voluntarily for complete year)

Name: PESHAWAR ELECTRIC SUPPLY COMPANY LIMITED
Address: WAPDA HOUSE SHAMI ROAD .

Contact No: 00923158300481

100000028192570

Registration No 2228080
Tax Year : 2017
Period : 01-Jul-2016 - 30-Jun-2017
Medium : Online
Due Date : 31-Dec-2017
Document Date 31-Dec-2017

Adjustable Tax

Description	Code	Receipts / Value	Tax Collected / Deducted	Tax Chargeable
Private Vehicle Tax u/s 234 - LHN6256	64130003	0.00	6,565.00	0.00
Private Vehicle Tax u/s 234 - BA9750	64130003	0.00	6,565.00	0.00
Private Vehicle Tax u/s 234 - MAA160	64130003	0.00	565.00	0.00
Private Vehicle Tax u/s 234 - N3575	64130003	0.00	3,565.00	0.00
Private Vehicle Tax u/s 234 - B1833	64130003	0.00	139,565.00	0.00
Private Vehicle Tax u/s 234 - BUB7780	64130003	0.00	3,565.00	0.00
Private Vehicle Tax u/s 234 - R3898	64130003	0.00	565.00	0.00
Private Vehicle Tax u/s 234 - A4593	64130003	0.00	6,565.00	0.00
Private Vehicle Tax u/s 234 - BA4557	64130003	0.00	6,565.00	0.00
Private Vehicle Tax u/s 234 - BC2285	64130003	0.00	3,565.00	0.00
Private Vehicle Tax u/s 234 - A1195	64130003	0.00	6,565.00	0.00
Private Vehicle Tax u/s 234 - M4204	64130003	0.00	6,565.00	0.00
Private Vehicle Tax u/s 234 - N4175	64130003	0.00	565.00	0.00
Private Vehicle Tax u/s 234 - M4469	64130003	0.00	3,565.00	0.00
Private Vehicle Tax u/s 234 - SB2015	64130003	0.00	6,565.00	0.00
Private Vehicle Tax u/s 234 - KT7949	64130003	0.00	3,565.00	0.00
Private Vehicle Tax u/s 234 - M4492	64130003	0.00	6,565.00	0.00
Private Vehicle Tax u/s 234 - A2504	64130003	0.00	565.00	0.00
Private Vehicle Tax u/s 234 - N5255	64130003	0.00	6,565.00	0.00
Private Vehicle Tax u/s 234 - A2629	64130003	0.00	7,065.00	0.00
Private Vehicle Tax u/s 234 - SWA8564	64130003	0.00	26,500.00	0.00
Private Vehicle Tax u/s 234 - MB3868	64130003	0.00	4,280.00	0.00
Private Vehicle Tax u/s 234 - MRB1281	64130003	0.00	4,280.00	0.00
Private Vehicle Tax u/s 234 - B1948	64130003	0.00	4,280.00	0.00
Private Vehicle Tax u/s 234 - D4275	64130003	0.00	455.00	0.00
Private Vehicle Tax u/s 234 - AD453	64130003	0.00	10,950.00	0.00
Private Vehicle Tax u/s 234 - B4724	64130003	0.00	10,950.00	0.00
Private Vehicle Tax u/s 234 - D1732	64130003	0.00	30,000.00	0.00
Private Vehicle Tax u/s 234 - D1907	64130003	0.00	36,400.00	0.00
Private Vehicle Tax u/s 234 - D1941	64130003	0.00	2,400.00	0.00
Private Vehicle Tax u/s 234 - N6987	64130003	0.00	6,500.00	0.00
Private Vehicle Tax u/s 234 - X111	64130003	0.00	18,270.00	0.00
Private Vehicle Tax u/s 234 - B1765	64130003	0.00	15,000.00	0.00

Copyright © 2014 All rights reserved Federal Board of Revenue - Government of Pakistan

166

114(1) (Return of Income filed voluntarily for complete year)

Name: PESHAWAR ELECTRIC SUPPLY COMPANY LIMITED
Address: WAPDA HOUSE SHAMI ROAD .

Contact No: 00923158300481

100000028192570

Registration No 2228080
Tax Year : 2017
Period : 01-Jul-2016 - 30-Jun-2017
Medium : Online
Due Date : 31-Dec-2017
Document Date 31-Dec-2017

Adjustable Tax

Description	Code	Receipts / Value	Tax Collected / Deducted	Tax Chargeable
Private Vehicle Tax u/s 234 - B1613	64130003	0.00	3,500.00	0.00
Private Vehicle Tax u/s 234 - B1765	64130003	0.00	7,500.00	0.00
Private Vehicle Tax u/s 234 - B1932	64130003	0.00	54,000.00	0.00
Private Vehicle Tax u/s 234 - A5457	64130003	0.00	833.00	0.00
Private Vehicle Tax u/s 234 - A1195	64130003	0.00	3,150.00	0.00
Private Vehicle Tax u/s 234 - B1380	64130003	0.00	15,525.00	0.00
Private Vehicle Tax u/s 234 - B1934	64130003	0.00	24,000.00	0.00
Private Vehicle Tax u/s 234 - 1838	64130003	0.00	102,000.00	0.00
Private Vehicle Tax u/s 234 - b2272	64130003	0.00	24,000.00	0.00
Private Vehicle Tax u/s 234 - a2359	64130003	0.00	24,000.00	0.00
Private Vehicle Tax u/s 234 - M3849	64130003	0.00	1,200.00	0.00
Telephone Bill u/s 236(1)(a)	64150001	0.00	109,602.00	0.00
Telephone Bill u/s 236(1)(a) - 6512042	64150001	0.00	6,873.00	0.00
Telephone Bill u/s 236(1)(a) - 303399	64150001	0.00	2,859.00	0.00
Telephone Bill u/s 236(1)(a) - 381031	64150001	0.00	3,564.00	0.00
Telephone Bill u/s 236(1)(a) - 841406	64150001	0.00	3,564.00	0.00
Telephone Bill u/s 236(1)(a) - 966740225	64150001	0.00	2,164.00	0.00
Telephone Bill u/s 236(1)(a) - 928610395	64150001	0.00	886.00	0.00
Telephone Bill u/s 236(1)(a) - 928610396	64150001	0.00	1,720.00	0.00
Telephone Bill u/s 236(1)(a) - 915890483	64150001	0.00	4,937.00	0.00
Telephone Bill u/s 236(1)(a) - 937880091	64150001	0.00	1,168.00	0.00
Telephone Bill u/s 236(1)(a) - 937840407	64150001	0.00	6,613.00	0.00
Telephone Bill u/s 236(1)(a) - 997302608	64150001	0.00	3,528.00	0.00
Telephone Bill u/s 236(1)(a) - 938210483	64150001	0.00	2,220.00	0.00
Telephone Bill u/s 236(1)(a) - 995610079	64150001	0.00	4,058.00	0.00
Telephone Bill u/s 236(1)(a) - 5836359	64150001	0.00	4,104.00	0.00
Telephone Bill u/s 236(1)(a) - 2325334	64150001	0.00	2,155.00	0.00
Telephone Bill u/s 236(1)(a) - 5862191	64150001	0.00	3,156.00	0.00
Telephone Bill u/s 236(1)(a) - 5611937	64150001	0.00	3,564.00	0.00
Telephone Bill u/s 236(1)(a) - 2587285	64150001	0.00	2,681.00	0.00
Telephone Bill u/s 236(1)(a) - 511331	64150001	0.00	2,664.00	0.00
Telephone Bill u/s 236(1)(a) - 302206	64150001	0.00	3,485.00	0.00
Telephone Bill u/s 236(1)(a) - 302210	64150001	0.00	64.00	0.00

Copyright © 2014 All rights reserved Federal Board of Revenue - Government of Pakistan

187

114(1) (Return of Income filed voluntarily for complete year)

Name: PESHAWAR ELECTRIC SUPPLY COMPANY LIMITED
Address: WAPDA HOUSE SHAMI ROAD .

Contact No: 00923158300481

100000028192570

Registration No 2228080
Tax Year : 2017
Period : 01-Jul-2016 - 30-Jun-2017
Medium : Online
Due Date : 31-Dec-2017
Document Date 31-Dec-2017

Adjustable Tax

Description	Code	Receipts / Value	Tax Collected / Deducted	Tax Chargeable
Telephone Bill u/s 236(1)(a) - 320220	64150001	0.00	678.00	0.00
Telephone Bill u/s 236(1)(a) - 614024	64150001	0.00	4,268.00	0.00
Telephone Bill u/s 236(1)(a) - 614025	64150001	0.00	3,159.00	0.00
Telephone Bill u/s 236(1)(a) - 640121	64150001	0.00	2,969.00	0.00
Telephone Bill u/s 236(1)(a) - 615653	64150001	0.00	3,469.00	0.00
Telephone Bill u/s 236(1)(a) - 614026	64150001	0.00	5,613.00	0.00
Telephone Bill u/s 236(1)(a) - 610138	64150001	0.00	2,686.00	0.00
Telephone Bill u/s 236(1)(a) - 6290209	64150001	0.00	2,175.00	0.00
Telephone Bill u/s 236(1)(a) - 3838685	64150001	0.00	594.00	0.00
Telephone Bill u/s 236(1)(a) - 3322696	64150001	0.00	984.00	0.00
Telephone Bill u/s 236(1)(a) - 3301378	64150001	0.00	1,052.00	0.00
Telephone Bill u/s 236(1)(a) - 3358992	64150001	0.00	1,293.00	0.00
Telephone Bill u/s 236(1)(a) - 3300841	64150001	0.00	444.00	0.00
Telephone Bill u/s 236(1)(a) - 6555646	64150001	0.00	1,052.00	0.00
Telephone Bill u/s 236(1)(a) - 330084	64150001	0.00	666.00	0.00
Telephone Bill u/s 236(1)(a) - 330726	64150001	0.00	1,315.00	0.00
Telephone Bill u/s 236(1)(a) - 9260193	64150001	0.00	2,955.00	0.00
Telephone Bill u/s 236(1)(a) - 0997304480	64150001	0.00	617.00	0.00
Telephone Bill u/s 236(1)(a) - 0997920029	64150001	0.00	2,053.00	0.00
Telephone Bill u/s 236(1)(a) - 0997920130	64150001	0.00	817.00	0.00
Telephone Bill u/s 236(1)(a) - 0997920018	64150001	0.00	844.00	0.00
Telephone Bill u/s 236(1)(a) - 0997920030	64150001	0.00	288.00	0.00
Telephone Bill u/s 236(1)(a) - 0997304007	64150001	0.00	1,410.00	0.00
Telephone Bill u/s 236(1)(a) - 0997308487	64150001	0.00	444.00	0.00
Telephone Bill u/s 236(1)(a) - 0997304487	64150001	0.00	263.00	0.00
Telephone Bill u/s 236(1)(a) - 0997501000	64150001	0.00	222.00	0.00
Telephone Bill u/s 236(1)(a) - 0997920033	64150001	0.00	567.00	0.00
Telephone Bill u/s 236(1)(a) - 0997320220	64150001	0.00	526.00	0.00
Telephone Bill u/s 236(1)(a) - 0997302209	64150001	0.00	152.00	0.00
Cellphone Bill u/s 236(1)(a)	64150002	0.00	483,244.00	0.00
Cellphone Bill u/s 236(1)(a) - 03137477361	64150002	0.00	483,244.00	0.00

Copyright © 2011 All rights reserved Federal Board of Revenue - Government of Pakistan.

168

114(1) (Return of Income filed voluntarily for complete year)

Name: PESHAWAR ELECTRIC SUPPLY COMPANY LIMITED
Address: WAPDA HOUSE SHAMI ROAD .

Registration No 2228080
Tax Year : 2017
Period : 01-Jul-2016 - 30-Jun-2017
Medium : Online
Due Date : 31-Dec-2017
Document Date 31-Dec-2017

Contact No: 00923158300481

100000028192570

Final / Fixed / Minimum / Average / Relevant / Reduced Tax

Description	Code	Receipts / Value	Tax Collected / Deducted	Tax Chargeable
Final / Fixed / Minimum / Average / Relevant / Reduced Tax	640001	165,369.00	16,537.00	16,537.00
Profit on Debt u/s 152(2) / u/c (5A), Part II, 2nd Schedule	64050096	165,369.00	16,537.00	16,537.00
Profit on Debt u/s 152(2) / u/c (5A), Part II, 2nd Schedule - 099012000017	64050096	165,369.00	16,537.00	16,537.00

Computations

Description	Code	Total Amount	Amount Exempt from Tax / Subject to Fixed / Final Tax	Amount Subject to Normal Tax
Income / (Loss) from Business	3000	-15,096,098,714.00	0.00	-15,096,098,714.00
Tax Chargeable	9200	0.00	0.00	840,003,911.00
Final / Fixed / Minimum / Average / Relevant / Reduced Income Tax	920100	0.00	0.00	16,537.00
Turnover / Tax Chargeable u/s 113 @1%	923160	83,998,737,386.00	0.00	839,987,374.00
Accounting Profit / Tax Chargeable u/s 113C @17%	923173	0.00	0.00	0.00
Difference of Minimum Tax Chargeable u/s 113	923194	0.00	0.00	839,987,374.00
Refund Adjustment of Other Year(s) against Demand of this Year	92101	110,772,324.00	0.00	5,571,270.00
Withholding Income Tax	9201	0.00	101,507,700.00	0.00
Admitted Income Tax	9203	0.00	732,924,941.00	0.00

Depreciation

Description	Code	WDV (BF)	Deletion	Addition (Used in Pakistan)	Extent of Use	Addition (New)	Extent of Use	Initial Allowance	Depreciation	WDV (CF)
Building (all types)	3302	823,441,052.00	0.00	0.00	100.00	404,582,834.00	100.00	60,687,425.00	116,733,646.00	1,050,602,815.00
Plant / Machinery (not Otherwise specified)	330301	13,153,156,416.00	0.00	0.00	100.00	7,672,102,739.00	100.00	1,918,025,685.00	2,836,085,021.00	16,071,148,449.00
Computer Hardware / Allied Items / Equipment used in manufacture of IT	330302	35,246,560.00	0.00	0.00	100.00	27,861,174.00	100.00	6,965,294.00	16,842,732.00	39,299,708.00

Copyright © 2014 All rights reserved Federal Board of Revenue - Government of Pakistan

189

114(1) (Return of income filed voluntarily for complete year)

Name: PESHAWAR ELECTRIC SUPPLY COMPANY LIMITED
Address: WAPDA HOUSE SHAMI ROAD .

Contact No: 00923158300481

100000028192570

Registration No 2228080
Tax Year : 2017
Period : 01-Jul-2016 - 30-Jun-2017
Medium : Online
Due Date : 31-Dec-2017
Document Date 31-Dec-2017

Depreciation

Description	Code	WDV (BF)	Deletion	Addition (Used In Pakistan)	Extent of Use	Addition (New)	Extent of Use	Initial Allowance	Depreciation	WDV (CF)
products	330302	35,246,560.00	0.00	0.00	100.00	27,861,174.00	100.00	6,965,294.00	16,842,732.00	39,299,708.00
Furniture (including fittings)	330303	4,723,424.00	0.00	0.00	100.00	3,991,116.00	100.00	0.00	1,307,181.00	7,407,359.00
Motor Vehicle (not plying for hire)	33041	222,617,698.00	0.00	0.00	100.00	9,084,507.00	100.00	0.00	34,755,331.00	196,946,874.00

Copyright © 2011 All rights reserved Federal Board of Revenue - Government of Pakistan

170

INCOME TAX DEPARTMENT

COMPUTERIZED PAYMENT RECEIPT (CPR - IT)

ATIONAL BANK OF PAKISTAN — CANTT BRANCH, PESHAWAR. (0386) : PESHAWAR

:PR No	: IT-20170830-0386-1226021	Payment Date	: 30-Aug-2017
ayment Section	: 137 - Admitted Income Tax - 9203	RTO/LTU	: RTO PESHAWAR
ature of Payment	: Admitted Income Tax	Tax Period	: 2017
ccount Head(NAM)	: B01105		

etails of Tax Payer

NIC	: L0949-7/19980-4	Status	: CO
axpayer/Business ame & Address	: PESHAWAR ELECTRIC SUPPLY COMPANY LTD. , WAPDA HOUSE SHAMI ROAD		
		Tax Amount	: 215,000,000

mount of Tax In Words : Two Hundred Fifteen Million Rupees And No Paisas Only

Payment Mode	Amount	Date	AC / Ref No	Bank & Branch
Pay Order	215,000,000	29-Aug-2017	8103	NATIONAL BANK OF PAKISTAN , KHYBER BAZAR BRANCH, PESHAWAR , PESHAWAR

T-20170830-0386-1226021

Syed Hamid Ali

Signature & Stamp of Manager / Authorized officer

Document ID: 24711954 - Generation Date : 30-Aug-2017 12:13 PM - User: TP

171

FBR

INCOME TAX DEPARTMENT

COMPUTERIZED PAYMENT RECEIPT (CPR - IT)

NATIONAL BANK OF PAKISTAN — CANTT BRANCH, PESHAWAR. (0386) : PESHAWAR

CPR No : IT-20170928-0386-1242166

Payment Section : 137 - Admitted Income Tax - 9203
Nature of Payment : Admitted Income Tax
Account Head(NAM) : B01105

Payment Date : 28-Sep-2017
RTO/LTU : RTO PESHAWAR
Tax Period : 2017

Details of Tax Payer

CNIC : L0949-7/19980-4
Status : CO
Taxpayer/Business Name & Address : PESHAWAR ELECTRIC SUPPLY COMPANY LTD.
PESHAWAR ELECTRIC SUPPLY COMPANY LTD. , WAPDA HOUSE SHAMI ROAD

Tax Amount : 220,000,000

Amount of Tax in Words : Two Hundred Twenty Million Rupees And No Paisas Only

Payment Mode	Amount	Date	AC / Ref No	Bank & Branch
Pay Order	220,000,000	28-Sep-2017	8501	NATIONAL BANK OF PAKISTAN , KHYBER BAZAR BRANCH, PESHAWAR , PESHAWAR

IT-20170928-0386-1242166

Syed Hamid Ali

Signature & Stamp of Manager / Authorized officer

Document ID: 25038296 - Generation Date : 28-Sep-2017 12:41 PM User: TP

172

FBR

INCOME TAX DEPARTMENT

COMPUTERIZED PAYMENT RECEIPT (CPR - IT)

NATIONAL BANK OF PAKISTAN — CANTT BRANCH, PESHAWAR. (0386) : PESHAWAR

CPR No : IT-20170928-0386-1242075

Payment Section : 137 - Admitted Income Tax - 9203
Nature of Payment : Admitted Income Tax
Account Head(NAM) : B01105

Payment Date : 28-Sep-2017
RTO/LTU : RTO PESHAWAR
Tax Period : 2017

Details of Tax Payer

CNIC : L0949-7/19980-4
Status : CO
Taxpayer/Business Name & Address : PESHAWAR ELECTRIC SUPPLY COMPANY LTD.
PESHAWAR ELECTRIC SUPPLY COMPANY LTD. , WAPDA HOUSE SHAMI ROAD

Tax Amount : 250,000,000

Amount of Tax in Words : Two Hundred Fifty Million Rupees And No Paisas Only

Payment Mode	Amount	Date	AC / Ref No	Bank & Branch
Pay Order	250,000,000	28-Sep-2017	8500	NATIONAL BANK OF PAKISTAN , KHYBER BAZAR BRANCH, PESHAWAR , PESHAWAR

IT-20170928-0386-1242075

Syed Hamid Ali

Signature & Stamp of Manager / Authorized officer

177

FBR

INCOME TAX DEPARTMENT

COMPUTERIZED PAYMENT RECEIPT (CPR - IT)

NATIONAL BANK OF PAKISTAN — **CANTT BRANCH, PESHAWAR. (0386) : PESHAWAR**

CPR No : IT-20171030-0386-1291248

Payment Date : 30-Oct-2017

Payment Section : 137 - Admitted Income Tax - 9203

RTO/LTU : RTO PESHAWAR

Nature of Payment : Admitted Income Tax

Tax Period : 2017

Account Head(NAM) : B01105

Details of Tax Payer

CNIC : L0949-7/19980-4

Status : CO

Taxpayer/Business Name & Address : PESHAWAR ELECTRIC SUPPLY COMPANY LTD.
PESHAWAR ELECTRIC SUPPLY COMPANY LTD. , WAPDA HOUSE SHAMI ROAD

Tax Amount : 47,924,941

Amount of Tax in Words : Forty Seven Million Nine Hundred Twenty Four Thousand Nine Hundred Forty One Rupees And No Paisas Only

Payment Mode	Amount	Date	AC / Ref No	Bank & Branch
Pay Order	47,924,941	30-Oct-2017	8603	NATIONAL BANK OF PAKISTAN , KHYBER BAZAR BRANCH, PESHAWAR , PESHAWAR

IT-20171030-0386-1291248

Syed Hamid Ali

Signature & Stamp of Manager / Authorized officer

FBR

INCOME TAX DEPARTMENT

COMPUTERIZED PAYMENT RECEIPT (CPR - IT)

NATIONAL BANK OF PAKISTAN — **CANTT BRANCH, PESHAWAR. (0386) : PESHAWAR**

CPR No : IT-20171030-0386-1291311

Payment Section : 147 - Advance Income Tax - 9202

Nature of Payment : Advance Income Tax

Account Head(NAM) : B01105

Payment Date : 30-Oct-2017

RTO/LTU : RTO PESHAWAR

Tax Period : 2018

Details of Tax Payer

CNIC : L0949-7/19980-4

Status : CO

Taxpayer/Business Name & Address : PESHAWAR ELECTRIC SUPPLY COMPANY LTD. , PESHAWAR ELECTRIC SUPPLY COMPANY LTD. , WAPDA HOUSE SHAMI ROAD

Tax Amount : 180,000,000

Amount of Tax in Words : One Hundred Eighty Million Rupees And No Paisas Only

Payment Mode	Amount	Date	AC / Ref No	Bank & Branch
Pay Order	180,000,000	30-Oct-2017	8604	NATIONAL BANK OF PAKISTAN , KHYBER BAZAR BRANCH, PESHAWAR , PESHAWAR

IT-20171030-0386-1291311

Syed Hamid Ali

Signature & Stamp of Manager / Authorized officer

FBR

INCOME TAX DEPARTMENT

COMPUTERIZED PAYMENT RECEIPT (CPR - IT)

NATIONAL BANK OF PAKISTAN — CANTT BRANCH, PESHAWAR. (0386) : PESHAWAR

CPR No : IT-20171229-0386-1250323

Payment Section : 147 - Advance Income Tax - 9202
Nature of Payment : Advance Income Tax
Account Head(NAM) : B01105

Payment Date : 29-Dec-2017
RTO/LTU : RTO PESHAWAR
Tax Period : 2018

Details of Tax Payer

CNIC : L0949-7/19980-4
Status : CO
Taxpayer/Business Name & Address : PESHAWAR ELECTRIC SUPPLY COMPANY LTD. , WAPDA HOUSE SHAMI ROAD

Tax Amount : 95,000,000

Amount of Tax in Words : Ninety Five Million Rupees And No Paisas Only

Payment Mode	Amount	Date	AC / Ref No	Bank & Branch
Pay Order	95,000,000	29-Dec-2017	9102	NATIONAL BANK OF PAKISTAN , KHYBER BAZAR BRANCH, PESHAWAR , PESHAWAR

IT-20171229-0386-1250323

Syed Hamid Ali

Signature & Stamp of Manager / Authorized officer

Document ID: 26185202 - Generation Date : 29-Dec-2017 10:20 AM - User: TP

176

FBR

INCOME TAX DEPARTMENT

COMPUTERIZED PAYMENT RECEIPT (CPR - IT)

NATIONAL BANK OF PAKISTAN — **CANTT BRANCH, PESHAWAR. (0386) : PESHAWAR**

CPR No : IT-20171226-0386-1216213

Payment Section : 147 - Advance Income Tax - 9202

Nature of Payment : Advance Income Tax

Account Head(NAM) : B01105

Payment Date : 26-Dec-2017

RTO/LTU : RTO PESHAWAR

Tax Period : 2018

Details of Tax Payer

CNIC : L0949-7/19980-4

Status : CO

Taxpayer/Business Name & Address : PESHAWAR ELECTRIC SUPPLY COMPANY LTD. , PESHAWAR ELECTRIC SUPPLY COMPANY LTD. , WAPDA HOUSE SHAMI ROAD

Tax Amount : 49,039,000

Amount of Tax in Words : Forty Nine Million Thirty Nine Thousand Rupees And No Paisas Only

Payment Mode	Amount	Date	AC / Ref No	Bank & Branch
Pay Order	49,039,000	28-Dec-2017	8710	NATIONAL BANK OF PAKISTAN , KHYBER BAZAR BRANCH, PESHAWAR , PESHAWAR

IT-20171226-0386-1216213

Syed Hamid Ali

Signature & Stamp of Manager / Authorized officer

FBR

INCOME TAX DEPARTMENT

COMPUTERIZED PAYMENT RECEIPT (CPR - IT)

NATIONAL BANK OF PAKISTAN — CANTT BRANCH, PESHAWAR. (0386) : PESHAWAR

CPR No : IT-20171229-0386-1254501

Payment Section : 147 - Advance Income Tax - 9202
Nature of Payment : Advance Income Tax
Account Head(NAM) : B01105

Payment Date : 29-Dec-2017
RTO/LTU : RTO PESHAWAR
Tax Period : 2018

Details of Tax Payer

CNIC : L0949-7/19980-4
Status : CO
Taxpayer/Business Name & Address : PESHAWAR ELECTRIC SUPPLY COMPANY LTD.
PESHAWAR ELECTRIC SUPPLY COMPANY LTD. , WAPDA HOUSE SHAMI ROAD

Tax Amount : 121,358,635

Amount of Tax in Words : One Hundred Twenty One Million Three Hundred Fifty Eight Thousand Six Hundred Thirty Five Rupees And No Paisas Only

Payment Mode	Amount	Date	AC / Ref No	Bank & Branch
Pay Order	121,358,635	29-Dec-2017	9300	NATIONAL BANK OF PAKISTAN , KHYBER BAZAR BRANCH, PESHAWAR , PESHAWAR

IT-20171229-0386-1254501

Syed Hamid Ali

Signature & Stamp of Manager / Authorized officer

Document ID: 26204343 - Generation Date : 29-Dec-2017 12:25 PM - User: TP

178

FBR

INCOME TAX DEPARTMENT

COMPUTERIZED PAYMENT RECEIPT (CPR - IT)

NATIONAL BANK OF PAKISTAN — CANTT BRANCH, PESHAWAR. (0386) : PESHAWAR

CPR No : IT-20180131-0386-1284558

Payment Section : 147 - Advance Income Tax - 9202
Nature of Payment : Advance Income Tax
Account Head(NAM) : B01105

Payment Date : 31-Jan-2018
RTO/LTU : RTO PESHAWAR
Tax Period : 2018

Details of Tax Payer

CNIC : L0949-7/19980-4
Status : CO
Taxpayer/Business Name & Address : PESHAWAR ELECTRIC SUPPLY COMPANY LTD.
: PESHAWAR ELECTRIC SUPPLY COMPANY LTD. , WAPDA HOUSE SHAMI ROAD

Tax Amount : 12,548,043

Amount of Tax in Words : Twelve Million Five Hundred Forty Eight Thousand Forty Three Rupees And No Paisas Only

Payment Mode	Amount	Date	AC / Ref No	Bank & Branch
Pay Order	12,548,043	31-Jan-2018	011802	NATIONAL BANK OF PAKISTAN , KHYBER BAZAR BRANCH, PESHAWAR , PESHAWAR

IT-20180131-0386-1284558

Syed Hamid Ali

Signature & Stamp of Manager / Authorized officer

Document ID: 26557576 - Generation Date : 31-Jan-2018 04:27 PM - User: TP

179

FBR

INCOME TAX DEPARTMENT

COMPUTERIZED PAYMENT RECEIPT (CPR - IT)

NATIONAL BANK OF PAKISTAN — **CANTT BRANCH, PESHAWAR. (0386) : PESHAWAR**

CPR No : IT-20180131-0386-1284765

Payment Section : 147 - Advance Income Tax - 9202
Nature of Payment : Advance Income Tax
Account Head(NAM) : B01105

Payment Date : 31-Jan-2018
RTO/LTU : RTO PESHAWAR
Tax Period : 2018

Details of Tax Payer

CNIC, : L0949-7/19980-4
Status : CO
Taxpayer/Business Name & Address : PESHAWAR ELECTRIC SUPPLY COMPANY LTD.
: PESHAWAR ELECTRIC SUPPLY COMPANY LTD. , WAPDA HOUSE SHAMI ROAD

Tax Amount : 61,923,077

Amount of Tax in Words : Sixty One Million Nine Hundred Twenty Three Thousand Seventy Seven Rupees And No Paisas Only

Payment Mode	Amount	Date	AC / Ref No	Bank & Branch
Pay Order	61,923,077	31-Jan-2018	011805	NATIONAL BANK OF PAKISTAN , KHYBER BAZAR BRANCH, PESHAWAR , PESHAWAR

IT-20180131-0386-1284765

Syed Hamid Ali

Signature & Stamp of Manager / Authorized officer

Document ID: 26557744 - Generation Date : 31-Jan-2018 04:35 PM - User: TP

180

FBR

INCOME TAX DEPARTMENT

COMPUTERIZED PAYMENT RECEIPT (CPR - IT)

NATIONAL BANK OF PAKISTAN — CANTT BRANCH, PESHAWAR. (0386) : PESHAWAR

CPR No : IT-20180329-0386-1265606

Payment Section : 147 - Advance Income Tax - 9202
Nature of Payment : Advance Income Tax
Account Head(NAM) : B01105

Payment Date : 29-Mar-2018
RTO/LTU : RTO PESHAWAR
Tax Period : 2018

Details of Tax Payer

CNIC : L0949-7/19980-4
Status : CO
Taxpayer/Business Name & Address : PESHAWAR ELECTRIC SUPPLY COMPANY LTD.
: PESHAWAR ELECTRIC SUPPLY COMPANY LTD. , WAPDA HOUSE SHAMI ROAD

Tax Amount : 167,115,923

Amount of Tax in Words : One Hundred Sixty Seven Million One Hundred Fifteen Thousand Nine Hundred Twenty Three Rupees And No Paisas Only

Payment Mode	Amount	Date	AC / Ref No	Bank & Branch
Pay Order	167,115,923	29-Mar-2018	2903	NATIONAL BANK OF PAKISTAN , KHYBER BAZAR BRANCH, PESHAWAR , PESHAWAR

IT-20180329-0386-1265606

Syed Hamid Ali

Signature & Stamp of Manager / Authorized officer

Document ID: 27220351 - Generation Date : 29-Mar-2018 02:38 PM - User: TP

181

FBR

INCOME TAX DEPARTMENT

COMPUTERIZED PAYMENT RECEIPT (CPR - IT)

NATIONAL BANK OF PAKISTAN — CANTT BRANCH, PESHAWAR. (0386) : PESHAWAR

CPR No : IT-20180627-0386-1237499

Payment Section	: 147 - Advance Income Tax - 9202	Payment Date	: 27-Jun-2018
Nature of Payment	: Advance Income Tax	RTO/LTU	: RTO PESHAWAR
Account Head(NAM)	: B01105	Tax Period	: 2018

Details of Tax Payer

CNIC	: L0949-7/19980-4	Status	: CO
Taxpayer/Business Name & Address	: PESHAWAR ELECTRIC SUPPLY COMPANY LTD.		
	: PESHAWAR ELECTRIC SUPPLY COMPANY LTD. , WAPDA HOUSE SHAMI ROAD		
		Tax Amount	: 200,000,000

Amount of Tax in Words : Two Hundred Million Rupees And No Paisas Only

Payment Mode	Amount	Date	AC / Ref No	Bank & Branch
Pay Order	200,000,000	27-Jun-2018	2761801	NATIONAL BANK OF PAKISTAN , KHYBER BAZAR BRANCH, PESHAWAR , PESHAWAR

IT-20180627-0386-1237499

Syed Hamid Ali

Signature & Stamp of Manager / Authorized officer

FBR

INCOME TAX DEPARTMENT

COMPUTERIZED PAYMENT RECEIPT (CPR - IT)

NATIONAL BANK OF PAKISTAN — CANTT BRANCH, PESHAWAR. (0386) : PESHAWAR

CPR No : IT-20180626-0386-1220264

Payment Section : 147 - Advance Income Tax - 9202
Nature of Payment : Advance Income Tax
Account Head(NAM) : B01105

Payment Date : 26-Jun-2018
RTO/LTU : RTO PESHAWAR
Tax Period : 2018

Details of Tax Payer

CNIC : L0949-7/19980-4
Status : CO
Taxpayer/Business Name & Address : PESHAWAR ELECTRIC SUPPLY COMPANY LTD.
: PESHAWAR ELECTRIC SUPPLY COMPANY LTD. , WAPDA HOUSE SHAMI ROAD

Tax Amount : 100,000,000

Amount of Tax in Words : One Hundred Million Rupees And No Paisas Only

Payment Mode	Amount	Date	AC / Ref No	Bank & Branch
Pay Order	100,000,000	26-Jun-2018	2661801	NATIONAL BANK OF PAKISTAN , KHYBER BAZAR BRANCH, PESHAWAR , PESHAWAR

IT-20180626-0386-1220264

Syed Hamid Ali

Signature & Stamp of Manager / Authorized officer

Document ID: 28247263 - Generation Date : 26-Jun-2018 02:38 PM - User: TP

S.NO.1/2

Central Power Purchasing Agency Guarantee Limited

A Company of Government of Pakistan

CPPA

PHONE 051-9216956

OFFICE OF THE
Manager Corporate Accounts CPPA-G
4th Floor, ENERCON Building, Islamabad

NO.MF/(T)/CPPA/IOT/ 24829-31

DATED:- 2-6-17

FINANCE DIRECTOR
PESCO, PESHAWAR.

SUBJECT: DEBIT MEMO FOR Jun-17

Please find enclosed herewith Debit Memo details as below pertains to your company for necessary cash payment through a Cross cheque in favour of CPPA-G within 7 days i.e not later than June,09 -

SR.NO	DEBIT MEMO NO.	MONTH	AMOUNT	ENCLOSURES
1	PPA-39/PESCO-02	Jun-17	47,745,781.80	5

ASSTT: MANAGER (C.A)
RECEIVEABLE PAYABLES/IOT

C.C TO:-

1 C.F.O CPPA-G for information please.
2 G.M Finance PEPCO, 712-Wapda House, Lahore for information please.

6424
07/06/17

OFFICE THE GENERAL MANAGER FINANCE PESCO HQ PESHAWAR

ADMN	COMP
PAYMENT	IOT
BANKING	RECEIVABLE
PENSION	BUDGET
CPAC	[illegible]

AM CPC please provide copy to Receivable payable
14/06

104

Central Power Purchasing Agency Guarantee Limited

A Company of Government of Pakistan

Manager Corporate Accounts CPPA (G) Ltd
ENERCON BUILDING BLUE AREA, ISLAMABAD.

DEBIT NOTE

REFERNECE: JV Imprest Jun-17

PPA-39/PESCO-02

ISSUING OFFICE Manager Corporate Accounts CPPA (G) Ltd

RECEIVING OFFICE: FINANCE DIRECTOR, PESCO, PESHAWAR.

Dated: Jun-17

We have Debited your account for the amount of Rs. 47,745,781.80

Forty Seven Million Seven Hundred Forty Five Thousand Seven Hundred Eighty One Rupees and Eighty Paisa

Being the Debit raised on account of payment made to PEPCO Allied formation during 2016-17 on your behalf as per ration approved in Budget of each formation. It is hereby advised to please issue a cheque in favour of CPPA-G for the amount mentioned above within 7 days time (Upto 09 June,2017).

ACCOUNT CODE	DESCRIPTION	DEBIT	CREDIT
50112	TRADE DEBTORS	47,745,781.80	
	TOTAL	47,745,781.80	

PREPARED BY

CHECKED BY

APPROVED BY

185

ACKNOWLEDGEMENT SLIP

114(1) (Return of Income filed voluntarily for complete year)

Name: PESHAWAR ELECTRIC SUPPLY COMPANY LIMITED
Address: WAPDA HOUSE SHAMI ROAD .

Contact No: 00923158300481

100000044902558

Registration No 2228080
Tax Year : 2018
Period : 01-Jul-2017 - 30-Jun-2018
Medium : Online
Due Date : 31-Dec-2018
Document Date 31-Dec-2018

Description	Code	Amount
Tax Chargeable	9200	1,170,706,751.00
Refundable Income Tax	9210	7,125,858.00

This is not a valid evidence of being a "filer" for the purposes of clauses (23A) and (35C) of sections 2 and 181A.

Copyright © 2014 All rights reserved Federal Board of Revenue - Government of Pakistan.

114(1) (Return of Income filed voluntarily for complete year)

Name: PESHAWAR ELECTRIC SUPPLY COMPANY LIMITED
Address: WAPDA HOUSE SHAMI ROAD .

Contact No: 00923158300481

100000044902558

Registration No 2228080
Tax Year : 2018
Period : 01-Jul-2017 - 30-Jun-2018
Medium : Online
Due Date : 31-Dec-2018
Document Date 31-Dec-2018

Manufacturing / Trading Items

Description	Code	Total Amount	Amount Exempt from Tax / Subject to Fixed / Final Tax	Amount Subject to Normal Tax
Income / (Loss) from Business	3000	-40,856,427,249.00	0.00	-40,856,427,249.00
Net Revenue (excluding Sales Tax, Federal Excise, Brokerage, Commission, Discount, Freight Outward)	3029	87,312,409,560.00	0.00	87,312,409,560.00
Gross Revenue (excluding Sales Tax, Federal Excise)	3009	87,312,409,560.00	0.00	87,312,409,560.00
Gross Domestic Sales / Services Fee	3004	87,312,409,560.00	0.00	87,312,409,560.00
Cost of Sales / Services	3030	142,941,661,328.00	0.00	142,941,661,328.00
Direct Expenses	3089	142,941,661,328.00	0.00	142,941,661,328.00
Other Direct Expenses	3083	142,941,661,328.00	0.00	142,941,661,328.00
Gross Profit / (Loss)	3100	-55,629,251,768.00	0.00	-55,629,251,768.00

Other Revenues

Description	Code	Total Amount	Amount Exempt from Tax / Subject to Fixed / Final Tax	Amount Subject to Normal Tax
Other Revenues	3129	41,231,427,543.00	0.00	41,231,427,543.00
Profit on Debt	3106	139,991,532.00	0.00	139,991,532.00
Accounting Gain on Sale of Assets	3116	1,740,284.00	0.00	1,740,284.00
Others	3128	41,089,695,727.00	0.00	41,089,695,727.00

Management, Administrative, Selling & Financial Expenses

Description	Code	Total Amount	Amount Exempt from Tax / Subject to Fixed / Final Tax	Amount Subject to Normal Tax
Management, Administrative, Selling & Financial Expenses	3199	27,404,614,789.00	0.00	27,404,614,789.00

Copyright © 2014 All rights reserved Federal Board of Revenue - Government of Pakistan.

114(1) (Return of Income filed voluntarily for complete year)

Name: PESHAWAR ELECTRIC SUPPLY COMPANY LIMITED
Address: WAPDA HOUSE SHAMI ROAD .

Contact No: 00923158300481

100000044902558

Registration No 2228080
Tax Year : 2018
Period : 01-Jul-2017 - 30-Jun-2018
Medium : Online
Due Date : 31-Dec-2018
Document Date 31-Dec-2018

Management, Administrative, Selling & Financial Expenses

Description	Code	Total Amount	Amount Exempt from Tax / Subject to Fixed / Final Tax	Amount Subject to Normal Tax
Rates / Taxes / Cess	3152	45,501,346.00	0.00	45,501,346.00
Salaries / Wages / Perquisites / Benefits	3154	15,252,688,234.00	0.00	15,252,688,234.00
Traveling / Conveyance / Vehicles Running / Maintenance	3155	360,062,360.00	0.00	360,062,360.00
Electricity / Water / Gas	3158	37,018,121.00	0.00	37,018,121.00
Repair / Maintenance	3165	646,871,385.00	0.00	646,871,385.00
Stationery / Printing / Photocopies / Office Supplies	3166	189,381,364.00	0.00	189,381,364.00
Advertisement / Publicity / Promotion	3168	18,501,845.00	0.00	18,501,845.00
Insurance	3170	27,054,793.00	0.00	27,054,793.00
Professional Charges	3171	32,154,144.00	0.00	32,154,144.00
Profit on Debt (Financial Charges / Markup / Interest)	3172	3,399,996,674.00	0.00	3,399,996,674.00
Other Indirect Expenses	3180	234,056,821.00	0.00	234,056,821.00
Directors Fee	3183	4,995,180.00	0.00	4,995,180.00
Provision for Doubtful / Bad Debts	3191	4,511,059,305.00	0.00	4,511,059,305.00
Irrecoverable Debts Written off	3186	1,072,509.00	0.00	1,072,509.00
Accounting Depreciation	3198	2,644,200,708.00	0.00	2,644,200,708.00
Accounting Profit / (Loss)	3200	-41,802,439,014.00	0.00	-41,802,439,014.00

Inadmissible / Admissible Deductions

Description	Code	Total Amount	Amount Exempt from Tax / Subject to Fixed / Final Tax	Amount Subject to Normal Tax
Inadmissible Deductions	3239	7,155,260,013.00	0.00	7,155,260,013.00
Add Backs u/s 29(2) Provision for Doubtful Debts	3201	4,511,059,305.00	0.00	4,511,059,305.00
Add Backs Accounting Depreciation	3238	2,644,200,708.00	0.00	2,644,200,708.00

Copyright © 2014 All rights reserved Federal Board of Revenue - Government of Pakistan.

114(1) (Return of Income filed voluntarily for complete year)

Name: PESHAWAR ELECTRIC SUPPLY COMPANY LIMITED
Address: WAPDA HOUSE SHAMI ROAD .

Contact No: 00923158300481

100000044902558

Registration No 2228080
Tax Year : 2018
Period : 01-Jul-2017 - 30-Jun-2018
Medium : Online
Due Date : 31-Dec-2018
Document Date 31-Dec-2018

Inadmissible / Admissible Deductions

Description	Code	Total Amount	Amount Exempt from Tax / Subject to Fixed / Final Tax	Amount Subject to Normal Tax
Admissible Deductions	3259	6,209,248,248.00	0.00	6,209,248,248.00
Accounting Gain on Sale of Assets	3246	1,740,284.00	0.00	1,740,284.00
Tax Amortization for Current Year	3247	0.00	0.00	0.00
Tax Depreciation / Initial Allowance for Current Year	3248	6,207,507,964.00	0.00	6,207,507,964.00

Adjustments

Description	Code	Total Amount	Amount Exempt from Tax / Subject to Fixed / Final Tax	Amount Subject to Normal Tax
Income / (Loss) from Business before adjustment of Admissible Depreciation / Initial Allowance / Amortization for current / previous years	3270	0.00	0.00	-34,648,919,285.00

Business Assets / Equity / Liabilities

Description	Code	Amount		
Total Assets	3349	253,104,089,569.00	0.00	0.00
Land	3301	677,819,919.00	0.00	0.00
Building (all types)	3302	2,357,544,798.00	1,050,602,815.00	0.00
Plant / Machinery / Equipment / Furniture (including fittings)	3303	47,180,492,454.00	0.00	0.00
Motor Vehicle	3304	160,780,680.00	0.00	0.00
Capital Work in Progress	3308	17,572,780,202.00	0.00	0.00
Long Term Investments	3311	18,551,072.00	0.00	0.00
Advances / Deposits / Prepayments	3312	27,134,989,013.00	0.00	0.00
Trade Debtors / Receivables	3313	60,999,543,643.00	0.00	0.00
Stocks / Stores / Spares	3315	3,186,327,786.00	0.00	0.00

Copyright © 2014 All rights reserved Federal Board of Revenue - Government of Pakistan.

114(1) (Return of Income filed voluntarily for complete year)

Name: PESHAWAR ELECTRIC SUPPLY COMPANY LIMITED
Address: WAPDA HOUSE SHAMI ROAD .

Contact No: 00923158300481

100000044902558

Registration No 2228080
Tax Year : 2018
Period : 01-Jul-2017 - 30-Jun-2018
Medium : Online
Due Date : 31-Dec-2018
Document Date 31-Dec-2018

Business Assets / Equity / Liabilities

Description	Code	Amount		
Short Term Advances / Deposits / Prepayments	3317	1,099,123,764.00	0.00	0.00
Cash / Cash Equivalents	3319	5,156,486,666.00	0.00	0.00
Other Assets	3348	87,559,649,572.00	0.00	0.00
Total Equity / Liabilities	3399	253,104,089,569.00	0.00	0.00
Authorized Capital	3351	50,000,000,000.00	0.00	0.00
Issued, Subscribed & Paid up capital	3352	10,000.00	0.00	0.00
Share Deposit Money	3353	18,082,025,791.00	0.00	0.00
Accumulated Profits	3364	-245,747,672,415.00	0.00	0.00
Long Term Borrowings / Debt / Loan	3371	71,235,710,841.00	0.00	0.00
Deferred Liabilities	3373	98,826,661,525.00	0.00	0.00
Provisions / Contingencies	3374	1,170,738,686.00	0.00	0.00
Current Portion of Long Term Liabilities	3382	37,991,269,969.00	0.00	0.00
Advances / Deposits / Accrued Expenses	3383	14,355,739,553.00	0.00	0.00
Trade Creditors / Payables	3384	257,189,605,619.00	0.00	0.00

Adjustable Tax

Description	Code	Receipts / Value	Tax Collected / Deducted	Tax Chargeable
Adjustable Tax	640000	0.00	74,059,559.00	0.00
Import u/s 148 @5.5%	64010011	0.00	46,442,324.00	0.00
Profit on Debt u/s 151 from Others	64040004	0.00	25,007,190.00	0.00
Profit on Debt u/s 151 from Others - pkmucb0027702010106301 - pkmucb0027702010106301	64040004	0.00	40,043.00	0.00
Profit on Debt u/s 151 from Others - pkmucb0562365121002092 - pkmucb0562365121002092	64040004	0.00	5,062,700.00	0.00
Profit on Debt u/s 151 from Others - pkmucb0027703010000661 - pkmucb0027703010000661	64040004	0.00	108,335.00	0.00
Profit on Debt u/s 151 from Others - pkmucb0027703010000689 - pkmucb0027703010000689	64040004	0.00	439,384.00	0.00

Copyright © 2014 All rights reserved Federal Board of Revenue - Government of Pakistan.

114(1) (Return of Income filed voluntarily for complete year)

Name: PESHAWAR ELECTRIC SUPPLY COMPANY LIMITED
Address: WAPDA HOUSE SHAMI ROAD .

Contact No: 00923158300481

10000004490258

Registration No 2228080
Tax Year : 2018
Period : 01-Jul-2017 - 30-Jun-2018
Medium : Online
Due Date : 31-Dec-2018
Document Date 31-Dec-2018

Adjustable Tax

Description	Code	Receipts / Value	Tax Collected / Deducted	Tax Chargeable
Profit on Debt u/s 151 from Others - pkmucb0027703010000652 - pkmucb0027703010000652	64040004	0.00	341,756.00	0.00
Profit on Debt u/s 151 from Others - pkmucb0027707010000048 - pkmucb0027707010000048	64040004	0.00	174,179.00	0.00
Profit on Debt u/s 151 from Others - pkmucb0027707010000022 - pkmucb0027707010000022	64040004	0.00	1,759,195.00	0.00
Profit on Debt u/s 151 from Others - HBL MEWA MANDI 2257900033701 - HBL MEWA MANDI 2257900033701	64040004	0.00	2,204,376.00	0.00
Profit on Debt u/s 151 from Others - HBL MEWA MANDI 2250001701 - HBL MEWA MANDI 2250001701	64040004	0.00	249,672.00	0.00
Profit on Debt u/s 151 from Others - HBL MEWA MANDI 2257900046201 - HBL MEWA MANDI 2257900046201	64040004	0.00	1,005,491.00	0.00
Profit on Debt u/s 151 from Others - HBL MEWA MANDI 2247900033801 - HBL MEWA MANDI 2247900033801	64040004	0.00	2,715,857.00	0.00
Profit on Debt u/s 151 from Others - PK87UNL0112126210017055 - PK87UNL0112126210017055	64040004	0.00	39,210.00	0.00
Profit on Debt u/s 151 from Others - PK35UNIL0112126200300046 - PK35UNIL0112126200300046	64040004	0.00	665,949.00	0.00
Profit on Debt u/s 151 from Others - PK3OUNIL0112126200300300039 - PK3OUNIL0112126200300300039	64040004	0.00	685,664.00	0.00
Profit on Debt u/s 151 from Others - 0090003010000077 - 0090003010000077	64040004	0.00	23,264.00	0.00
Profit on Debt u/s 151 from Others - 0090003010000016 - 0090003010000016	64040004	0.00	13,212.00	0.00
Profit on Debt u/s 151 from Others - 0090003010000051 - 0090003010000051	64040004	0.00	1,188.00	0.00
Profit on Debt u/s 151 from Others - 0090003010000069 - 0090003010000069	64040004	0.00	7,728.00	0.00
Profit on Debt u/s 151 from Others - 3003896492 - 3003896492	64040004	0.00	6,598.00	0.00

Copyright © 2014 All rights reserved Federal Board of Revenue - Government of Pakistan.

114(1) (Return of Income filed voluntarily for complete year)

Name: PESHAWAR ELECTRIC SUPPLY COMPANY LIMITED
Address: WAPDA HOUSE SHAMI ROAD .

Contact No: 00923158300481

100000044902558

Registration No 2228080
Tax Year : 2018
Period : 01-Jul-2017 - 30-Jun-2018
Medium : Online
Due Date : 31-Dec-2018
Document Date 31-Dec-2018

Adjustable Tax

Description	Code	Receipts / Value	Tax Collected / Deducted	Tax Chargeable
Profit on Debt u/s 151 from Others - 083609900012 - 083609900012	64040004	0.00	4,186.00	0.00
Profit on Debt u/s 151 from Others - 083609900034 - 083609900034	64040004	0.00	4,517.00	0.00
Profit on Debt u/s 151 from Others - NBP- 0598 Khyber Bazar - NBP- 0598 Khyber Bazar	64040004	0.00	3,669,697.00	0.00
Profit on Debt u/s 151 from Others - ABL 0701 Peshawar - ABL 0701 Peshawar	64040004	0.00	2,013,337.00	0.00
Profit on Debt u/s 151 from Others - 3013603760003 First Women Bank - 3013603760003 First Women Bank	64040004	0.00	53,820.00	0.00
Profit on Debt u/s 151 from Others - 3013603760004 First Women Bank - v3013603760004 First Women Bank	64040004	0.00	7,965.00	0.00
Profit on Debt u/s 151 from Others - 3013603760002 First Women Bank - 3013603760002 First Women Bank	64040004	0.00	127.00	0.00
Profit on Debt u/s 151 from Others - 03182012161318 - 03182012161318	64040004	0.00	3,669,697.00	0.00
Profit on Debt u/s 151 from Others - 35200-1551665-7 - 35200-1551665-7	64040004	0.00	40,043.00	0.00
Cash Withdrawal from Bank u/s 231A	64100101	0.00	1,478,916.00	0.00
Cash Withdrawal from Bank u/s 231A - HBL(0507-00105228-03) - HBL(0507-00105228-03)	64100101	0.00	34,372.00	0.00
Cash Withdrawal from Bank u/s 231A - MCB(1000580) - MCB(1000580)	64100101	0.00	3,165.00	0.00
Cash Withdrawal from Bank u/s 231A - HBL(0216-00529159-03) - HBL(0216-00529159-03)	64100101	0.00	3,688.00	0.00
Cash Withdrawal from Bank u/s 231A - HBL(0201-00000110-01) - HBL(0201-00000110-01)	64100101	0.00	626.00	0.00
Cash Withdrawal from Bank u/s 231A - HBL(0201-00241433-03) - HBL(0201-00241433-03)	64100101	0.00	19,183.00	0.00
Cash Withdrawal from Bank u/s 231A - HBL(0201-79002841-03) - HBL(0201-79002841-03)	64100101	0.00	13,380.00	0.00
Cash Withdrawal from Bank u/s 231A - HBL (028800134617-03) - HBL(028800134617-03)	64100101	0.00	6,718.00	0.00
Cash Withdrawal from Bank u/s 231A - HBL(1440-00094594-03) - HBL(1440-00094594-03)	64100101	0.00	4,130.00	0.00
Cash Withdrawal from Bank u/s 231A - HBL(0219-00200097-01) - HBL(0219-00200097-01)	64100101	0.00	6,389.00	0.00
Cash Withdrawal from Bank u/s 231A - HBL(0219-79004932-03) - HBL(0219-79004932-03)	64100101	0.00	2,541.00	0.00

Copyright © 2014 All rights reserved Federal Board of Revenue - Government of Pakistan

114(1) (Return of Income filed voluntarily for complete year)

Name: PESHAWAR ELECTRIC SUPPLY COMPANY LIMITED
Address: WAPDA HOUSE SHAMI ROAD .

Contact No: 00923158300481

100000044902558

Registration No 2228080
Tax Year : 2018
Period : 01-Jul-2017 - 30-Jun-2018
Medium : Online
Due Date : 31-Dec-2018
Document Date 31-Dec-2018

Adjustable Tax

Description	Code	Receipts / Value	Tax Collected / Deducted	Tax Chargeable
Cash Withdrawal from Bank u/s 231A - HBL(0219-79005235-03) - HBL(0219-79005235-03)	64100101	0.00	7,704.00	0.00
Cash Withdrawal from Bank u/s 231A - UBL (006701006808) - UBL(006701006808)	64100101	0.00	12,483.00	0.00
Cash Withdrawal from Bank u/s 231A - HBL(1782-00170068-0) - HBL(1782-00170068-0)	64100101	0.00	54,103.00	0.00
Cash Withdrawal from Bank u/s 231A - HBL(2460-70001155-0) - HBL(2460-70001155-0)	64100101	0.00	9,337.00	0.00
Cash Withdrawal from Bank u/s 231A - ABL LTD (0010001691250417) - ABL LTD(0010001691250417)	64100101	0.00	11,810.00	0.00
Cash Withdrawal from Bank u/s 231A - ABL (0010003899900017) - ABL(0010003899900017)	64100101	0.00	4,501.00	0.00
Cash Withdrawal from Bank u/s 231A - ABL (0010024600260012) - ABL(0010024600260012)	64100101	0.00	28,500.00	0.00
Cash Withdrawal from Bank u/s 231A - ABL (0010027578520019) - ABL(0010027578520019)	64100101	0.00	11,858.00	0.00
Cash Withdrawal from Bank u/s 231A - ABL (0010024733930012) - ABL(0010024733930012)	64100101	0.00	31,626.00	0.00
Cash Withdrawal from Bank u/s 231A - ABL (00100010005071620194) - ABL (00100010005071620194)	64100101	0.00	31,445.00	0.00
Cash Withdrawal from Bank u/s 231A - ABL (0010017993920018) - ABL(0010017993920018)	64100101	0.00	25,232.00	0.00
Cash Withdrawal from Bank u/s 231A - ABL (0010005071620714) - ABL(0010005071620714)	64100101	0.00	46,907.00	0.00
Cash Withdrawal from Bank u/s 231A - ABL (0010001691250309) - ABL(0010001691250309)	64100101	0.00	21,741.00	0.00
Cash Withdrawal from Bank u/s 231A - ABL (0010019868750015) - ABL(0010019868750015)	64100101	0.00	18,282.00	0.00
Cash Withdrawal from Bank u/s 231A - ABL (0010005071620714) - ABL(0010005071620714)	64100101	0.00	38,335.00	0.00
Cash Withdrawal from Bank u/s 231A - ABL (0010020407220013) - ABL(0010020407220013)	64100101	0.00	27,689.00	0.00
Cash Withdrawal from Bank u/s 231A - MCB (0058503010000443) - MCB(0058503010000443)	64100101	0.00	1,601.00	0.00
Cash Withdrawal from Bank u/s 231A - ABL(2811-8) - ABL (2811-8)	64100101	0.00	7,889.00	0.00
Cash Withdrawal from Bank u/s 231A - 3003896492 - 3003896492	64100101	0.00	10,106.00	0.00
Cash Withdrawal from Bank u/s 231A - 0010023065950010 - 0010023065950010	64100101	0.00	12,307.00	0.00

Copyright © 2014 All rights reserved Federal Board of Revenue - Government of Pakistan.

114(1) (Return of Income filed voluntarily for complete year)

Name: PESHAWAR ELECTRIC SUPPLY COMPANY LIMITED
Address: WAPDA HOUSE SHAMI ROAD .

Contact No: 00923158300481

100000044902558

Registration No 2228080
Tax Year : 2018
Period : 01-Jul-2017 - 30-Jun-2018
Medium : Online
Due Date : 31-Dec-2018
Document Date 31-Dec-2018

Adjustable Tax

Description	Code	Receipts / Value	Tax Collected / Deducted	Tax Chargeable
	64100101	0.00	12,307.00	0.00
Cash Withdrawal from Bank u/s 231A - 0010001691250157 - 0010001691250157	64100101	0.00	125.00	0.00
Cash Withdrawal from Bank u/s 231A - 0085010041056 - 0085010041056	64100101	0.00	44,092.00	0.00
Cash Withdrawal from Bank u/s 231A - 0010000559030147 - 0010000559030147	64100101	0.00	4,755.00	0.00
Cash Withdrawal from Bank u/s 231A - 0010000559030097 - 0010000559030097	64100101	0.00	20,038.00	0.00
Cash Withdrawal from Bank u/s 231A - 083609900012 - 083609900012	64100101	0.00	198,949.00	0.00
Cash Withdrawal from Bank u/s 231A - 083609900034 - 083609900034	64100101	0.00	1,479.00	0.00
Cash Withdrawal from Bank u/s 231A - 083609900034 - 083609900034	64100101	0.00	131,971.00	0.00
Cash Withdrawal from Bank u/s 231A - 0010623065140010 - 0010623065140010	64100101	0.00	38,797.00	0.00
Cash Withdrawal from Bank u/s 231A - 0010005035610024 - 0010005035610024	64100101	0.00	182,460.00	0.00
Cash Withdrawal from Bank u/s 231A - 0010005295480015 - 0010005295480015	64100101	0.00	24,668.00	0.00
Cash Withdrawal from Bank u/s 231A - 0010006889810016 - 0010006889810016	64100101	0.00	203,874.00	0.00
Cash Withdrawal from Bank u/s 231A - 111111111111 - 111111111111	64100101	0.00	52,286.00	0.00
Cash Withdrawal from Bank u/s 231A - 000235832959 - 000235832959	64100101	0.00	58,514.00	0.00
Cash Withdrawal from Bank u/s 231A - RO CITY D I KHAN - RO CITY D I KHAN	64100101	0.00	9,260.00	0.00

Copyright © 2014 All rights reserved Federal Board of Revenue - Government of Pakistan.

114(1) (Return of Income filed voluntarily for complete year)

Name: PESHAWAR ELECTRIC SUPPLY COMPANY LIMITED
Address: WAPDA HOUSE SHAMI ROAD .

Contact No: 00923158300481

100000044902558

Registration No 2228080
Tax Year : 2018
Period : 01-Jul-2017 - 30-Jun-2018
Medium : Online
Due Date : 31-Dec-2018
Document Date 31-Dec-2018

Adjustable Tax

Description	Code	Receipts / Value	Tax Collected / Deducted	Tax Chargeable
Private Vehicle Tax u/s 234	64130003	0.00	502,234.00	0.00
Private Vehicle Tax u/s 234 - MAB1940 - MAB1940	64130003	0.00	6,500.00	0.00
Private Vehicle Tax u/s 234 - A1268 - A1268	64130003	0.00	5,882.00	0.00
Private Vehicle Tax u/s 234 - A2359 - A2359	64130003	0.00	7,621.00	0.00
Private Vehicle Tax u/s 234 - B1450 - B1450	64130003	0.00	2,635.00	0.00
Private Vehicle Tax u/s 234 - BD4965 - BD4965	64130003	0.00	4,263.00	0.00
Private Vehicle Tax u/s 234 - MAB1940 - MAB1940	64130003	0.00	11,095.00	0.00
Private Vehicle Tax u/s 234 - BD4965 - BD4965	64130003	0.00	27,000.00	0.00
Private Vehicle Tax u/s 234 - A3284 - A3284	64130003	0.00	1,202.00	0.00
Private Vehicle Tax u/s 234 - B2506 - B2506	64130003	0.00	82,500.00	0.00
Private Vehicle Tax u/s 234 - 2533 - 2533	64130003	0.00	20,000.00	0.00
Private Vehicle Tax u/s 234 - B 8232 - B 8232	64130003	0.00	30,000.00	0.00
Private Vehicle Tax u/s 234 - D 2950 - D 2950	64130003	0.00	1,200.00	0.00
Private Vehicle Tax u/s 234 - FR 6909 - FR 6909	64130003	0.00	3,963.00	0.00
Private Vehicle Tax u/s 234 - D 2056 - D 2056	64130003	0.00	30,000.00	0.00
Private Vehicle Tax u/s 234 - D 2993 - D 2993	64130003	0.00	30,000.00	0.00
Private Vehicle Tax u/s 234 - FR 6926 - FR 6926	64130003	0.00	4,350.00	0.00
Private Vehicle Tax u/s 234 - B-2487 - B-2487	64130003	0.00	10,000.00	0.00
Private Vehicle Tax u/s 234 - N-4890 - N-4890	64130003	0.00	625.00	0.00
Private Vehicle Tax u/s 234 - A-2994 - A-2994	64130003	0.00	6,565.00	0.00
Private Vehicle Tax u/s 234 - A-2945 - A-2945	64130003	0.00	3,565.00	0.00

Copyright © 2014 All rights reserved Federal Board of Revenue - Government of Pakistan.

114(1) (Return of Income filed voluntarily for complete year)

Name: PESHAWAR ELECTRIC SUPPLY COMPANY LIMITED
Address: WAPDA HOUSE SHAMI ROAD .

Contact No: 00923158300481

100000044902558

Registration No 2228080
Tax Year : 2018
Period : 01-Jul-2017 - 30-Jun-2018
Medium : Online
Due Date : 31-Dec-2018
Document Date 31-Dec-2018

Adjustable Tax

Description	Code	Receipts / Value	Tax Collected / Deducted	Tax Chargeable
Private Vehicle Tax u/s 234 - A-2130 - A-2130	64130003	0.00	6,565.00	0.00
Private Vehicle Tax u/s 234 - B-5443 - B-5443	64130003	0.00	6,565.00	0.00
Private Vehicle Tax u/s 234 - BD-1935 - BD-1935	64130003	0.00	3,985.00	0.00
Private Vehicle Tax u/s 234 - B-1281 - B-1281	64130003	0.00	5,650.00	0.00
Private Vehicle Tax u/s 234 - B-3868 - B-3868	64130003	0.00	4,250.00	0.00
Private Vehicle Tax u/s 234 - D-1948 - D-1948	64130003	0.00	6,500.00	0.00
Private Vehicle Tax u/s 234 - D-4275 - D-4275	64130003	0.00	425.00	0.00
Private Vehicle Tax u/s 234 - M-4492 - M-4492	64130003	0.00	6,500.00	0.00
Private Vehicle Tax u/s 234 - A-2629 - A-2629	64130003	0.00	7,000.00	0.00
Private Vehicle Tax u/s 234 - A-1195 - A-1195	64130003	0.00	6,500.00	0.00
Private Vehicle Tax u/s 234 - N-4715 - N-4715	64130003	0.00	500.00	0.00
Private Vehicle Tax u/s 234 - KT-7949 - KT-7949	64130003	0.00	3,500.00	0.00
Private Vehicle Tax u/s 234 - N-5255 - N-5255	64130003	0.00	6,500.00	0.00
Private Vehicle Tax u/s 234 - SB-2015 - SB-2015	64130003	0.00	6,500.00	0.00
Private Vehicle Tax u/s 234 - A-3426 - A-3426	64130003	0.00	17,065.00	0.00
Private Vehicle Tax u/s 234 - ARB-8938 - ARB-8938	64130003	0.00	12,065.00	0.00
Private Vehicle Tax u/s 234 - M-3884 - M-3884	64130003	0.00	565.00	0.00
Private Vehicle Tax u/s 234 - R-4531 - R-4531	64130003	0.00	565.00	0.00
Private Vehicle Tax u/s 234 - A-4121 - A-4121	64130003	0.00	6,565.00	0.00
Private Vehicle Tax u/s 234 - B-1833 - B-1833	64130003	0.00	16,500.00	0.00
Private Vehicle Tax u/s 234 - B-4470 - B-4470	64130003	0.00	565.00	0.00

Copyright © 2014 All rights reserved Federal Board of Revenue - Government of Pakistan.

114(1) (Return of Income filed voluntarily for complete year)

Name: PESHAWAR ELECTRIC SUPPLY COMPANY LIMITED
Address: WAPDA HOUSE SHAMI ROAD .

Contact No: 00923158300481

100000044902558

Registration No 2228080
Tax Year : 2018
Period : 01-Jul-2017 - 30-Jun-2018
Medium : Online
Due Date : 31-Dec-2018
Document Date 31-Dec-2018

Adjustable Tax

Description	Code	Receipts / Value	Tax Collected / Deducted	Tax Chargeable
Private Vehicle Tax u/s 234 - A-4593 - A-4593	64130003	0.00	6,565.00	0.00
Private Vehicle Tax u/s 234 - N-3575 - N-3575	64130003	0.00	6,565.00	0.00
Private Vehicle Tax u/s 234 - BUB-7780 - BUB-7780	64130003	0.00	3,565.00	0.00
Private Vehicle Tax u/s 234 - BC-2285 - BC-2285	64130003	0.00	3,565.00	0.00
Private Vehicle Tax u/s 234 - NA-160 - NA-160	64130003	0.00	6,565.00	0.00
Private Vehicle Tax u/s 234 - MRC-2612 - MRC-2612	64130003	0.00	1,565.00	0.00
Private Vehicle Tax u/s 234 - R-3898 - R-3898	64130003	0.00	565.00	0.00
Private Vehicle Tax u/s 234 - LHN-6256 - LHN-6256	64130003	0.00	3,565.00	0.00
Private Vehicle Tax u/s 234 - BB-7207 - BB-7207	64130003	0.00	3,059.00	0.00
Private Vehicle Tax u/s 234 - PRK-2728 - PRK-2728	64130003	0.00	609.00	0.00
Private Vehicle Tax u/s 234 - BD1952 - BD1952	64130003	0.00	800.00	0.00
Private Vehicle Tax u/s 234 - BA9567 - BA9567	64130003	0.00	2,500.00	0.00
Private Vehicle Tax u/s 234 - BD1922 - BD1922	64130003	0.00	800.00	0.00
Private Vehicle Tax u/s 234 - BD1951 - BD1951	64130003	0.00	800.00	0.00
Private Vehicle Tax u/s 234 - BD1944 - BD1944	64130003	0.00	800.00	0.00
Private Vehicle Tax u/s 234 - BC9961 - BC9961	64130003	0.00	800.00	0.00
Private Vehicle Tax u/s 234 - BA9858 - BA9858	64130003	0.00	1,750.00	0.00
Private Vehicle Tax u/s 234 - BB9632 - BB9632	64130003	0.00	1,750.00	0.00
Private Vehicle Tax u/s 234 - BC2052 - BC2052	64130003	0.00	800.00	0.00
Private Vehicle Tax u/s 234 - BD1917 - BD1917	64130003	0.00	800.00	0.00
Private Vehicle Tax u/s 234 - BD1938 - BD1938	64130003	0.00	800.00	0.00
Private Vehicle Tax u/s 234 - BD1923 - BD1923	64130003	0.00	800.00	0.00
Private Vehicle Tax u/s 234 - BD1924 - BD1924	64130003	0.00	800.00	0.00
Private Vehicle Tax u/s 234 - BD1942 - BD1942	64130003	0.00	800.00	0.00
Private Vehicle Tax u/s 234 - BB7206 - BB7206	64130003	0.00	10,000.00	0.00
Private Vehicle Tax u/s 234 - BD1921 - BD1921	64130003	0.00	800.00	0.00
Private Vehicle Tax u/s 234 - BD1939 - BD1939	64130003	0.00	800.00	0.00

Copyright © 2014 All rights reserved Federal Board of Revenue - Government of Pakistan.

114(1) (Return of income filed voluntarily for complete year)

Name: PESHAWAR ELECTRIC SUPPLY COMPANY LIMITED
Address: WAPDA HOUSE SHAMI ROAD .

Contact No: 00923158300481

100000044902558

Registration No 2228080
Tax Year : 2018
Period : 01-Jul-2017 - 30-Jun-2018
Medium : Online
Due Date : 31-Dec-2018
Document Date 31-Dec-2018

Adjustable Tax

Description	Code	Receipts / Value	Tax Collected / Deducted	Tax Chargeable
Private Vehicle Tax u/s 234 - BA9397 - BA9397	64130003	0.00	10,000.00	0.00
Private Vehicle Tax u/s 234 - BB9633 - BB9633	64130003	0.00	1,750.00	0.00
Private Vehicle Tax u/s 234 - BD2538 - BD2538	64130003	0.00	10,000.00	0.00
Private Vehicle Tax u/s 234 - BD1950 - BD1950	64130003	0.00	800.00	0.00
Private Vehicle Tax u/s 234 - BA9568 - BA9568	64130003	0.00	2,500.00	0.00
Private Vehicle Tax u/s 234 - BD1933 - BD1933	64130003	0.00	800.00	0.00
Telephone Bill u/s 236(1)(a)	64150001	0.00	628,895.00	0.00
Telephone Bill u/s 236(1)(a) - ZONG - ZONG	64150001	0.00	524,932.00	0.00
Telephone Bill u/s 236(1)(a) - 0938-490060 - 0938-490060	64150001	0.00	2,481.00	0.00
Telephone Bill u/s 236(1)(a) - 261616 - 261616	64150001	0.00	372.00	0.00
Telephone Bill u/s 236(1)(a) - 302206 - 302206	64150001	0.00	2,707.00	0.00
Telephone Bill u/s 236(1)(a) - 302207 - 302207	64150001	0.00	270.00	0.00
Telephone Bill u/s 236(1)(a) - 302510 - 302510	64150001	0.00	90.00	0.00
Telephone Bill u/s 236(1)(a) - 303399 - 303399	64150001	0.00	2,380.00	0.00
Telephone Bill u/s 236(1)(a) - 330084 - 330084	64150001	0.00	1,947.00	0.00
Telephone Bill u/s 236(1)(a) - 330137 - 330137	64150001	0.00	1,685.00	0.00
Telephone Bill u/s 236(1)(a) - 330726 - 330726	64150001	0.00	2,159.00	0.00
Telephone Bill u/s 236(1)(a) - 332269 - 332269	64150001	0.00	608.00	0.00
Telephone Bill u/s 236(1)(a) - 335899 - 335899	64150001	0.00	1,911.00	0.00
Telephone Bill u/s 236(1)(a) - 381031 - 381031	64150001	0.00	2,532.00	0.00
Telephone Bill u/s 236(1)(a) - 403387 - 403387	64150001	0.00	1,073.00	0.00
Telephone Bill u/s 236(1)(a) - 511331 - 511331	64150001	0.00	1,599.00	0.00
Telephone Bill u/s 236(1)(a) - 610033 - 610033	64150001	0.00	1,047.00	0.00
Telephone Bill u/s 236(1)(a) - 614024 - 614024	64150001	0.00	4,383.00	0.00

Copyright © 2014 All rights reserved Federal Board of Revenue - Government of Pakistan

114(1) (Return of Income filed voluntarily for complete year)

Name: PESHAWAR ELECTRIC SUPPLY COMPANY LIMITED
Address: WAPDA HOUSE SHAMI ROAD .

Contact No: 00923158300481

100000044902558

Registration No 2228080
Tax Year : 2018
Period : 01-Jul-2017 - 30-Jun-2018
Medium : Online
Due Date : 31-Dec-2018
Document Date 31-Dec-2018

Adjustable Tax

Description	Code	Receipts / Value	Tax Collected / Deducted	Tax Chargeable
Telephone Bill u/s 236(1)(a) - 614025 - 614025	64150001	0.00	3,093.00	0.00
Telephone Bill u/s 236(1)(a) - 640121 - 640121	64150001	0.00	3,244.00	0.00
Telephone Bill u/s 236(1)(a) - 655564 - 655564	64150001	0.00	1,521.00	0.00
Telephone Bill u/s 236(1)(a) - 720385 - 720385	64150001	0.00	991.00	0.00
Telephone Bill u/s 236(1)(a) - 841406 - 841406	64150001	0.00	2,675.00	0.00
Telephone Bill u/s 236(1)(a) - 854543 - 854543	64150001	0.00	2,547.00	0.00
Telephone Bill u/s 236(1)(a) - 9280015 - 9280015	64150001	0.00	526.00	0.00
Telephone Bill u/s 236(1)(a) - 9280069 - 9280069	64150001	0.00	510.00	0.00
Telephone Bill u/s 236(1)(a) - 9280072 - 9280072	64150001	0.00	1,688.00	0.00
Telephone Bill u/s 236(1)(a) - 9280255 - 9280255	64150001	0.00	4,522.00	0.00
Telephone Bill u/s 236(1)(a) - 9280261 - 9280261	64150001	0.00	921.00	0.00
Telephone Bill u/s 236(1)(a) - 9280320 - 9280320	64150001	0.00	586.00	0.00
Telephone Bill u/s 236(1)(a) - 9280416 - 9280416	64150001	0.00	4,947.00	0.00
Telephone Bill u/s 236(1)(a) - 335330 - 335330	64150001	0.00	1,896.00	0.00
Telephone Bill u/s 236(1)(a) - 8775184 - 8775184	64150001	0.00	1,614.00	0.00
Telephone Bill u/s 236(1)(a) - 0095-610079 - 0095-610079	64150001	0.00	4,365.00	0.00
Telephone Bill u/s 236(1)(a) - 091-6290209 - 091-6290209	64150001	0.00	2,844.00	0.00
Telephone Bill u/s 236(1)(a) - 0923 630034 - 0923 630034	64150001	0.00	1,183.00	0.00
Telephone Bill u/s 236(1)(a) - 091-5243028, 5244511, 5244512 - 091-5243028, 5244511, 5244512	64150001	0.00	3,220.00	0.00
Telephone Bill u/s 236(1)(a) - 0928-610138 - 0928-610138	64150001	0.00	1,179.00	0.00

Copyright © 2014 All rights reserved Federal Board of Revenue - Government of Pakistan.

114(1) (Return of Income filed voluntarily for complete year)

Name: PESHAWAR ELECTRIC SUPPLY COMPANY LIMITED
Address: WAPDA HOUSE SHAMI ROAD .

Contact No: 00923158300481

100000044902558

Registration No 2228080
Tax Year : 2018
Period : 01-Jul-2017 - 30-Jun-2018
Medium : Online
Due Date : 31-Dec-2018
Document Date 31-Dec-2018

Adjustable Tax

Description	Code	Receipts / Value	Tax Collected / Deducted	Tax Chargeable
Telephone Bill u/s 236(1)(a) - 0928-610395 - 0928-610395	64150001	0.00	1,042.00	0.00
Telephone Bill u/s 236(1)(a) - 0928-610396 - 0928-610396	64150001	0.00	3,244.00	0.00
Telephone Bill u/s 236(1)(a) - 0937-880091, 0937-840407, 091-5890483 - 0937-880091, 0937-840407, 091-5890483	64150001	0.00	9,416.00	0.00
Telephone Bill u/s 236(1)(a) - 0966-740225 - 0966-740225	64150001	0.00	2,852.00	0.00
Telephone Bill u/s 236(1)(a) - 0997-302209 - 0997-302209	64150001	0.00	2,302.00	0.00
Telephone Bill u/s 236(1)(a) - 0997-303020 - 0997-303020	64150001	0.00	235.00	0.00
Telephone Bill u/s 236(1)(a) - 0997-320220 - 0997-320220	64150001	0.00	1,665.00	0.00
Telephone Bill u/s 236(1)(a) - 0997-320023 - 0997-320023	64150001	0.00	1,503.00	0.00
Telephone Bill u/s 236(1)(a) - 223013 - 223013	64150001	0.00	1,551.00	0.00
Telephone Bill u/s 236(1)(a) - 302608 - 302608	64150001	0.00	1,235.00	0.00
Telephone Bill u/s 236(1)(a) - 304487 - 304487	64150001	0.00	265.00	0.00
Telephone Bill u/s 236(1)(a) - 310030 - 310030	64150001	0.00	1,101.00	0.00
Telephone Bill u/s 236(1)(a) - 460224 - 460224	64150001	0.00	1,113.00	0.00
Telephone Bill u/s 236(1)(a) - 460232 - 460232	64150001	0.00	1,554.00	0.00
Telephone Bill u/s 236(1)(a) - 501000 - 501000	64150001	0.00	198.00	0.00
Telephone Bill u/s 236(1)(a) - 610294 - 610294	64150001	0.00	239.00	0.00
Telephone Bill u/s 236(1)(a) - 614023 - 614023	64150001	0.00	300.00	0.00
Telephone Bill u/s 236(1)(a) - 615653 - 615653	64150001	0.00	274.00	0.00
Telephone Bill u/s 236(1)(a) - 841406 - 841406	64150001	0.00	261.00	0.00
Telephone Bill u/s 236(1)(a) - 2325334 - 2325334	64150001	0.00	486.00	0.00

Copyright © 2014 All rights reserved Federal Board of Revenue - Government of Pakistan.

114(1) (Return of Income filed voluntarily for complete year)

Name: PESHAWAR ELECTRIC SUPPLY COMPANY LIMITED
Address: WAPDA HOUSE SHAMI ROAD .

Contact No: 00923158300481

100000044902558

Registration No 2228080
Tax Year : 2018
Period : 01-Jul-2017 - 30-Jun-2018
Medium : Online
Due Date : 31-Dec-2018
Document Date 31-Dec-2018

Adjustable Tax

Description	Code	Receipts / Value	Tax Collected / Deducted	Tax Chargeable
Telephone Bill u/s 236(1)(a) - 2587285 - 2587285	64150001	0.00	474.00	0.00
Telephone Bill u/s 236(1)(a) - 5836359 - 5836359	64150001	0.00	530.00	0.00
Telephone Bill u/s 236(1)(a) - 5862191 - 5862191	64150001	0.00	534.00	0.00
Telephone Bill u/s 236(1)(a) - 8751184 - 8751184	64150001	0.00	273.00	0.00

Computations

Description	Code	Total Amount	Amount Exempt from Tax / Subject to Fixed / Final Tax	Amount Subject to Normal Tax
Income / (Loss) from Business	3000	-40,856,427,249.00	0.00	-40,856,427,249.00
Tax Chargeable	9200	0.00	0.00	1,170,706,751.00
Turnover / Tax Chargeable u/s 113 @1.25%	923160	93,656,540,112.00	0.00	1,170,706,751.00
Accounting Profit / Tax Chargeable u/s 113C @17%	923173	0.00	0.00	0.00
Difference of Minimum Tax Chargeable u/s 113	923194	0.00	0.00	1,170,706,751.00
Withholding Income Tax	9201	0.00	74,059,559.00	0.00
Advance Income Tax	9202	0.00	986,984,678.00	0.00
Admitted Income Tax	9203	0.00	116,788,372.00	0.00
Refundable Income Tax	9210	0.00	0.00	7,125,858.00

Depreciation

Description	Code	WDV (BF)	Deletion	Addition (Used in Pakistan)	Extent of Use	Addition (New)	Extent of Use	Initial Allowance	Depreciation	WDV (CF)
Building (all types)	3302	1,050,602,815.00	0.00	0.00	100.00	416,907,199.00	100.00	62,536,080.00	140,497,393.00	1,264,476,541.00
Plant / Machinery (not Otherwise specified)	330301	16,071,148,450.00	0.00	0.00	100.00	9,375,252,023.00	100.00	2,343,813,006.00	3,465,388,120.00	19,637,199,347.00
Computer Hardware / Allied	330302	39,299,708.00	0.00	0.00	100.00	320,224,772.00	100.00	80,056,193.00	83,840,486.00	195,627,801.00

Copyright © 2014 All rights reserved Federal Board of Revenue - Government of Pakistan

114(1) (Return of Income filed voluntarily for complete year)

Name: PESHAWAR ELECTRIC SUPPLY COMPANY LIMITED
Address: WAPDA HOUSE SHAMI ROAD .

Contact No: 00923158300481

100000044902558

Registration No 2228080
Tax Year : 2018
Period : 01-Jul-2017 - 30-Jun-2018
Medium : Online
Due Date : 31-Dec-2018
Document Date 31-Dec-2018

Depreciation

Description	Code	WDV (BF)	Deletion	Addition (Used in Pakistan)	Extent of Use	Addition (New)	Extent of Use	Initial Allowance	Depreciation	WDV (CF)
Items / Equipment used in manufacture of IT products	330302	39,299,708.00	0.00	0.00	100.00	320,224,772.00	100.00	80,056,193.00	83,840,486.00	195,627,801.00
Furniture (including fittings)	330303	7,407,359.00	0.00	0.00	100.00	4,823,675.00	100.00	0.00	1,834,655.00	10,396,379.00
Motor Vehicle (not plying for hire)	33041	196,946,874.00	0.00	0.00	100.00	0.00	100.00	0.00	29,542,031.00	167,404,843.00

Copyright © 2014 All rights reserved Federal Board of Revenue - Government of Pakistan.

Annex - C

INCOME TAX DEPARTMENT

COMPUTERIZED PAYMENT RECEIPT (CPR - IT)

NATIONAL BANK OF PAKISTAN — **CANTT BRANCH, PESHAWAR. (0386) : PESHAWAR**

CPR No : **IT-20180928-0386-1292935**

Payment Date : 28-Sep-2018

Payment Section : 147 - Advance Income Tax - 9202

RTO/LTU : RTO PESHAWAR

Nature of Payment : Advance Income Tax

Tax Period : 2019

Account Head(NAM) : B01105

Details of Tax Payer

CNIC : L0949-7/19980-4

Status : CO

Taxpayer/Business Name & Address : PESHAWAR ELECTRIC SUPPLY COMPANY LTD.
PESHAWAR ELECTRIC SUPPLY COMPANY LTD. , WAPDA HOUSE SHAMI ROAD

Tax Amount : 80,000,000

Amount of Tax in Words : Eighty Million Rupees And No Paisas Only

Payment Mode	Amount	Date	AC / Ref No	Bank & Branch
Pay Order	80,000,000	28-Sep-2018	290918	NATIONAL BANK OF PAKISTAN , KHYBER BAZAR BRANCH, PESHAWAR , PESHAWAR

IT-20180928-0386-1292935

Syed Hamid Ali

Signature & Stamp of Manager / Authorized officer

2018-19 = Rs. 1,349 (CPRs).

INCOME TAX DEPARTMENT

COMPUTERIZED PAYMENT RECEIPT (CPR - IT)

NATIONAL BANK OF PAKISTAN — **CANTT BRANCH, PESHAWAR. (0386) : PESHAWAR**

CPR No : **IT-20180928-0386-1292982**

Payment Section : 147 - Advance Income Tax - 9202
Nature of Payment : Advance Income Tax
Account Head(NAM) : B01105

Payment Date : 28-Sep-2018
RTO/LTU : RTO PESHAWAR
Tax Period : 2019 2/12

Details of Tax Payer

CNIC : L0949-7/19980-4
Status : CO
Taxpayer/Business Name & Address : PESHAWAR ELECTRIC SUPPLY COMPANY LTD. PESHAWAR ELECTRIC SUPPLY COMPANY LTD. , WAPDA HOUSE SHAMI ROAD

Tax Amount : 100,000,000

Amount of Tax in Words : One Hundred Million Rupees And No Paisas Only

Payment Mode	Amount	Date	AC / Ref No	Bank & Branch
Pay Order	100,000,000	28-Sep-2018	290618	NATIONAL BANK OF PAKISTAN , KHYBER BAZAR BRANCH, PESHAWAR , PESHAWAR

IT-20180928-0386-1292982

Syed Hamid Ali

Signature & Stamp of Manager / Authorized officer

204

INCOME TAX DEPARTMENT

COMPUTERIZED PAYMENT RECEIPT (CPR - IT)

NATIONAL BANK OF PAKISTAN — **CANTT BRANCH, PESHAWAR. (0386) : PESHAWAR**

CPR No : **IT-20181031-0386-1298397**

Payment Section : 147 - Advance Income Tax - 9202
Nature of Payment : Advance Income Tax
Account Head(NAM) : B01105

Payment Date : 31-Oct-2018
RTO/LTU : RTO PESHAWAR
Tax Period : 2019 3/12

Details of Tax Payer

CNIC : L0949-7/19980-4
Status : CO
Taxpayer/Business Name & Address : PESHAWAR ELECTRIC SUPPLY COMPANY LTD. , PESHAWAR ELECTRIC SUPPLY COMPANY LTD. , WAPDA HOUSE SHAMI ROAD

Tax Amount : 175,000,000

Amount of Tax in Words : One Hundred Seventy Five Million Rupees And No Paisas Only

Payment Mode	Amount	Date	AC / Ref No	Bank & Branch
Pay Order	175,000,000	30-Oct-2018	301018	NATIONAL BANK OF PAKISTAN , KHYBER BAZAR BRANCH, PESHAWAR , PESHAWAR

IT-20181031-0386-1298397

ASIF SHEHZAD

Signature & Stamp of Manager / Authorized officer

INCOME TAX DEPARTMENT

COMPUTERIZED PAYMENT RECEIPT (CPR - IT)

NATIONAL BANK OF PAKISTAN — **CUSTOM HEADQUARTER BRANCH, PESHAWAR (1556) : PESHAWAR**

CPR No : **IT-20181228-1556-1292738**

Payment Date : 28-Dec-2018

Payment Section : 147 - Advance Income Tax - 9202

RTO/LTU : RTO PESHAWAR

Nature of Payment : Advance Income Tax

Tax Period : 2019 4/12

Account Head(NAM) : B01105

Details of Tax Payer

CNIC : L0949-7/19980-4

Status : CO

Taxpayer/Business Name & Address : PESHAWAR ELECTRIC SUPPLY COMPANY LTD. PESHAWAR ELECTRIC SUPPLY COMPANY LTD. , WAPDA HOUSE SHAMI ROAD

Tax Amount : 50,000,000

Amount of Tax in Words : Fifty Million Rupees And No Paisas Only

Payment Mode	Amount	Date	AC / Ref No	Bank & Branch
Pay Order	50,000,000	28-Dec-2018	281228	NATIONAL BANK OF PAKISTAN , KHYBER BAZAR BRANCH, PESHAWAR , PESHAWAR

IT-20181228-1556-1292738

MUHAMMAD SHOAIB KHALIL

Signature & Stamp of Manager / Authorized officer

INCOME TAX DEPARTMENT

COMPUTERIZED PAYMENT RECEIPT (CPR - IT)

NATIONAL BANK OF PAKISTAN — **CANTT BRANCH, PESHAWAR. (0386) : PESHAWAR**

CPR No : **IT-20181231-0386-1312802**

Payment Section : 147 - Advance Income Tax - 9202
Nature of Payment : Advance Income Tax
Account Head(NAM) : B01105

Payment Date : 31-Dec-2018
RTO/LTU : RTO PESHAWAR
Tax Period : 2019 5/12

Details of Tax Payer

CNIC : L0949-7/19980-4
Status : CO
Taxpayer/Business Name & Address : PESHAWAR ELECTRIC SUPPLY COMPANY LTD. , WAPDA HOUSE SHAMI ROAD

Tax Amount : 100,000,000

Amount of Tax in Words : One Hundred Million Rupees And No Paisas Only

Payment Mode	Amount	Date	AC / Ref No	Bank & Branch
Pay Order	100,000,000	31-Dec-2018	311218	NATIONAL BANK OF PAKISTAN , KHYBER BAZAR BRANCH, PESHAWAR , PESHAWAR

IT-20181231-0386-1312802

ASIF SHEHZAD

Signature & Stamp of Manager / Authorized officer

INCOME TAX DEPARTMENT

COMPUTERIZED PAYMENT RECEIPT (CPR - IT)

NATIONAL BANK OF PAKISTAN — **CANTT BRANCH, PESHAWAR. (0386) : PESHAWAR**

CPR No : **IT-20181231-0386-1312867**

Payment Date : 31-Dec-2018

Payment Section : 147 - Advance Income Tax - 9202

RTO/LTU : RTO PESHAWAR

Nature of Payment : Advance Income Tax

Tax Period : 2019 6/12

Account Head(NAM) : B01105

Details of Tax Payer

CNIC : L0949-7/19980-4

Status : CO

Taxpayer/Business Name & Address : PESHAWAR ELECTRIC SUPPLY COMPANY LTD.
PESHAWAR ELECTRIC SUPPLY COMPANY LTD. , WAPDA HOUSE SHAMI ROAD

Tax Amount : 100,000,000

Amount of Tax in Words : One Hundred Million Rupees And No Paisas Only

Payment Mode	Amount	Date	AC / Ref No	Bank & Branch
Pay Order	100,000,000	31-Dec-2018	311228	NATIONAL BANK OF PAKISTAN , KHYBER BAZAR BRANCH, PESHAWAR , PESHAWAR

IT-20181231-0386-1312867

ASIF SHEHZAD

Signature & Stamp of Manager / Authorized officer

INCOME TAX DEPARTMENT

COMPUTERIZED PAYMENT RECEIPT (CPR - IT)

NATIONAL BANK OF PAKISTAN — **CANTT BRANCH, PESHAWAR. (0386) : PESHAWAR**

CPR No : **IT-20181231-0386-1312939**

Payment Section : 147 - Advance Income Tax - 9202
Nature of Payment : Advance Income Tax
Account Head(NAM) : B01105

Payment Date : 31-Dec-2018
RTO/LTU : RTO PESHAWAR
Tax Period : 2019 1/12

Details of Tax Payer

CNIC : L0949-7/19980-4
Status : CO
Taxpayer/Business Name & Address : PESHAWAR ELECTRIC SUPPLY COMPANY LTD.
PESHAWAR ELECTRIC SUPPLY COMPANY LTD. , WAPDA HOUSE SHAMI ROAD

Tax Amount : 55,000,000

Amount of Tax in Words : Fifty Five Million Rupees And No Paisas Only

Payment Mode	Amount	Date	AC / Ref No	Bank & Branch
Pay Order	55,000,000	31-Dec-2018	311238	NATIONAL BANK OF PAKISTAN , KHYBER BAZAR BRANCH, PESHAWAR , PESHAWAR

IT-20181231-0386-1312939

ASIF SHEHZAD

Signature & Stamp of Manager / Authorized officer

INCOME TAX DEPARTMENT

COMPUTERIZED PAYMENT RECEIPT (CPR - IT)

NATIONAL BANK OF PAKISTAN — **CANTT BRANCH, PESHAWAR. (0386) : PESHAWAR**

CPR No : **IT-20190131-0386-1299664**

Payment Date : 31-Jan-2019

Payment Section : 147 - Advance Income Tax - 9202

RTO/LTU : RTO PESHAWAR

Nature of Payment : Advance Income Tax

Tax Period : 2019 B/12

Account Head(NAM) : B01105

Details of Tax Payer

CNIC : L0949-7/19980-4

Status : CO

Taxpayer/Business Name & Address : PESHAWAR ELECTRIC SUPPLY COMPANY LTD.
PESHAWAR ELECTRIC SUPPLY COMPANY LTD. , WAPDA HOUSE SHAMI ROAD

Tax Amount : 65,000,000

Amount of Tax in Words : Sixty Five Million Rupees And No Paisas Only

Payment Mode	Amount	Date	AC / Ref No	Bank & Branch
Pay Order	65,000,000	30-Jan-2019	8500	NATIONAL BANK OF PAKISTAN , KHYBER BAZAR BRANCH, PESHAWAR , PESHAWAR

IT-20190131-0386-1299664

ASIF SHEHZAD

Signature & Stamp of Manager / Authorized officer

INCOME TAX DEPARTMENT

COMPUTERIZED PAYMENT RECEIPT (CPR - IT)

NATIONAL BANK OF PAKISTAN — **CANTT BRANCH, PESHAWAR. (0386) : PESHAWAR**

CPR No : **IT-20190329-0386-1287966**

Payment Section : 147 - Advance Income Tax - 9202
Nature of Payment : Advance Income Tax
Account Head(NAM) : B01105

Payment Date : 29-Mar-2019
RTO/LTU : RTO PESHAWAR
Tax Period : 2019 9/12

Details of Tax Payer

CNIC : L0949-7/19980-4
Status : CO
Taxpayer/Business Name & Address : PESHAWAR ELECTRIC SUPPLY COMPANY LTD.
PESHAWAR ELECTRIC SUPPLY COMPANY LTD. , WAPDA HOUSE SHAMI ROAD

Tax Amount : 303,000,000

Amount of Tax in Words : Three Hundred Three Million Rupees And No Paisas Only

Payment Mode	Amount	Date	AC / Ref No	Bank & Branch
Pay Order	303,000,000	29-Mar-2019	290319	NATIONAL BANK OF PAKISTAN , KHYBER BAZAR BRANCH, PESHAWAR , PESHAWAR

IT-20190329-0386-1287966

ASIF SHEHZAD

Signature & Stamp of Manager / Authorized officer

INCOME TAX DEPARTMENT

COMPUTERIZED PAYMENT RECEIPT (CPR - IT)

NATIONAL BANK OF PAKISTAN — **CANTT BRANCH, PESHAWAR. (0386) : PESHAWAR**

CPR No : **IT-20190329-0386-1288013**

Payment Section : 147 - Advance Income Tax - 9202
Nature of Payment : Advance Income Tax
Account Head(NAM) : B01105

Payment Date : 29-Mar-2019
RTO/LTU : RTO PESHAWAR
Tax Period : 2019 10/12

Details of Tax Payer

CNIC : L0949-7/19980-4
Status : CO
Taxpayer/Business Name & Address : PESHAWAR ELECTRIC SUPPLY COMPANY LTD. , WAPDA HOUSE SHAMI ROAD

Tax Amount : 20,000,000

Amount of Tax in Words : Twenty Million Rupees And No Paisas Only

Payment Mode	Amount	Date	AC / Ref No	Bank & Branch
Pay Order	20,000,000	29-Mar-2019	300319	NATIONAL BANK OF PAKISTAN , KHYBER BAZAR BRANCH, PESHAWAR , PESHAWAR

IT-20190329-0386-1288013

ASIF SHEHZAD

Signature & Stamp of Manager / Authorized officer

INCOME TAX DEPARTMENT

COMPUTERIZED PAYMENT RECEIPT (CPR - IT)

NATIONAL BANK OF PAKISTAN — **CANTT BRANCH, PESHAWAR. (0386) : PESHAWAR**

CPR No : **IT-20190531-0386-1284470**

Payment Section : 147 - Advance Income Tax - 9202
Nature of Payment : Advance Income Tax
Account Head(NAM) : B01105

Payment Date : 31-May-2019
RTO/LTU : RTO PESHAWAR
Tax Period : 2019 11/19

Details of Tax Payer

CNIC : L0949-7/19980-4
Status : CO
Taxpayer/Business Name & Address : PESHAWAR ELECTRIC SUPPLY COMPANY LTD. , WAPDA HOUSE SHAMI ROAD

Tax Amount : 38,000,000

Amount of Tax in Words : Thirty Eight Million Rupees And No Paisas Only

Payment Mode	Amount	Date	AC / Ref No	Bank & Branch
Pay Order	38,000,000	31-Mar-2019	1234	NATIONAL BANK OF PAKISTAN , KHYBER BAZAR BRANCH, PESHAWAR , PESHAWAR

IT-20190531-0386-1284470

ASIF SHEHZAD

Signature & Stamp of Manager / Authorized officer

INCOME TAX DEPARTMENT

COMPUTERIZED PAYMENT RECEIPT (CPR - IT)

NATIONAL BANK OF PAKISTAN — CANTT BRANCH, PESHAWAR. (0386) : PESHAWAR

CPR No : **IT-20190628-0386-1354827**

Payment Section : 147 - Advance Income Tax - 9202
Nature of Payment : Advance Income Tax
Account Head(NAM) : B01105

Payment Date : 28-Jun-2019
RTO/LTU : RTO PESHAWAR
Tax Period : 2019 12/13

Details of Tax Payer

CNIC : L0949-7/19980-4
Status : CO
Taxpayer/Business Name & Address : PESHAWAR ELECTRIC SUPPLY COMPANY LTD. PESHAWAR ELECTRIC SUPPLY COMPANY LTD. , WAPDA HOUSE SHAMI ROAD

Tax Amount : 263,000,000

Amount of Tax in Words : Two Hundred Sixty Three Million Rupees And No Paisas Only

Payment Mode	Amount	Date	AC / Ref No	Bank & Branch
Pay Order	263,000,000	28-Jun-2019	6698	NATIONAL BANK OF PAKISTAN , KHYBER BAZAR BRANCH, PESHAWAR , PESHAWAR

IT-20190628-0386-1354827

ASIF SHEHZAD

Signature & Stamp of Manager / Authorized officer

Document ID: 33103515 - Generation Date : 28-Jun-2019 04:36 PM - User: TP

214

Annex- Cs.NO.1/2

Central Power Purchasing Agency Guarantee Limited

A Company of Government of Pakistan

CPPA

PHONE 051-9216956

OFFICE OF THE
Manager Corporate Accounts CPPA-G
4th Floor, ENERCON Building, Islamabad

NO.MF/(T)/CPPA/IOT/ 24829-31

DATED:- 2-6-17

FINANCE DIRECTOR
PESCO, PESHAWAR.

SUBJECT: DEBIT MEMO FOR Jun-17

Please find enclosed herewith Debit Memo details as below pertains to your company for necessary cash payment through a Cross cheque in favour of CPPA-G within 7 days i.e not later than June,09 -

SR.NO	DEBIT MEMO NO.	MONTH	AMOUNT	ENCLOSURES
1	PPA-39/PESCO-02	Jun-17	47,745,781.80	5

ASSTT: MANAGER (C.A)
RECEIVEABLE PAYABLES/IOT

C.C TO:-

1 C.F.O CPPA-G for information please.
2 G.M Finance PEPCO, 712-Wapda House, Lahore for information please.

6424
07/06/17

OFFICE THE GENERAL MANAGER FINANCE PESCO HQ PESHAWAR

ADMN	COMP
PAYMENT	IOT
BANKING	RPAYABLE
PENSION	BUDGET
CP NO	

DM (CA)
DM

AM CPC please provide copy to Receivable payables
14/06

215

Central Power Purchasing Agency Guarantee Limited

A Company of Government of Pakistan

Manager Corporate Accounts CPPA (G) Ltd

ENERCON BUILDING BLUE AREA, ISLAMABAD.

DEBIT NOTE

REFERNECE: JV Imprest Jun-17

ISSUING OFFICE: Manager Corporate Accounts CPPA (G) Ltd PPA-39/PESCO-02

RECEIVING OFFICE: FINANCE DIRECTOR, PESCO, PESHAWAR. Dated: Jun-17

We have Debited your account for the amount of Rs. 47,745,781.80

Forty Seven Million Seven Hundred Forty Five Thousand Seven Hundred Eighty One Rupees and Eighty Paisa

Being the Debit raised on account of payment made to PEPCO Allied formation during 2016-17 on your behalf as per ration approved in Budget of each formation. It is hereby advised to please issue a cheque in favour of CPPA-G for the amount mentioned above within 7 days time (Upto 09 June,2017).

ACCOUNT CODE	DESCRIPTION	DEBIT	CREDIT
.50112	TRADE DEBTORS	47,745,781.80	
	TOTAL	47,745,781.80	

PREPARED BY

CHECKED BY

APPROVED BY

216

CPPA

CENTRAL POWER PURCHASING AGENNCY GURANTEE LTD

			J.V NO:	MONTH:
DISCOs	A/C HEAD	RATIO	DR	CR
LESCO	150106	24	114,589,876.32	
FESCO	150107	14	66,844,094.52	
MEPCO	150108	15	71,618,672.70	
QESCO	150109	6	28,647,469.08	
GEPCO	150110	11	52,520,359.98	
IESCO	150111	10	47,745,781.80	
PESCO	150112	10	47,745,781.80	
HESCO	150113	5	23,872,890.90	
TESCO	150118	1	4,774,578.18	
SEPCO	150137	4	19,098,312.72	
TOTAL (DISCOs)		100	**477,457,818.00**	
GENCO-I	150102	30	32,824,200.00	
GENCO-II	150103	30	32,824,200.00	
GENCO-III	1050104	30	32,824,200.00	
GENCO-IV	150117	10	10,941,400.00	
TOTAL (GENCOs)		100	**109,414,000.00**	
TOTAL(DIS+GEN)			**586,871,818.00**	
PMU	150119001			95,878,389
M&S	150119002			18,068,000
M.D POWER	150119003			205,225,000
C.A PEPCO	150119004			9,400,000
SR B&O(TH)	150119005			109,414,000
REO	15011907			8,820,000
M.D PEPCO	150119008			140,066,429
G.TOTAL			**586,871,818.00**	**586,871,818**

S.NO-2/2

Central Power Purchasing Agency Guarantee Limited

A Company of Government of Pakistan

PHONE 051-9216956

OFFICE OF THE
Manager Corporate Accounts CPPA-G
4th Floor, ENERCON Building, Islamabad

NO.MF/(T)/CPPA/IOT/ 34629

DATED:- 28/9/17

FINANCE DIRECTOR
PESCO, PESHAWAR.

SUBJECT: DEBIT MEMO FOR Jun-17

Please find enclosed herewith Debit Memo details as below pertains to your company for necessary and early adjustment at your end.

SR.NO	DEBIT MEMO NO.	MONTH	AMOUNT	ENCLOSURES
1	PPA-55/PESCO-03	Jun-17	3,650,000.00	

7981
03/10/17

ASSTT: MANAGER (C.A)
RECEIVEABLE PAYABLE/IOT

218

Central Power Purchasing Agency Guarantee Limited

A Company of Government of Pakistan

Manager Corporate Accounts CPPA (G) Ltd
ENERCON BUILDING BLUE AREA, ISLAMABAD.

DEBIT NOTE

EFERNECE: JV IMPREST Jun-17

SUING OFFICE Manager Corporate Accounts CPPA (G) Ltd PPA-55/PESCO-03

ECEIVING OFFICE: FINANCE DIRECTOR, PESCO, PESHAWAR. Dated: Jun-17

'e have Debited your account for the amount of Rs. 3,650,000.00

hree Million Six Hundred Fifty Thousand Rupees and Zero Paisa

ing the Debit raised on account of payment of PEPCO MANAGEMENT Fee made to PEPCO Allied formation for

e period 28.05.2017 to 30.06.2017 on your behalf as per ration approved in Budget of each formation

ACCOUNT CODE	DESCRIPTION	DEBIT	CREDIT
150112	TRADE DEBTORS	3,650,000.00	
	TOTAL	3,650,000.00	

EPARED BY CHECKED BY APPROVED BY

KPMG Taseer Hadi & Co.
Chartered Accountants
2nd Floor,
Servis House
2-Main Gulberg Jail Road,
Lahore Pakistan

Telephone + 92 (42) 3579 0901-6
Fax + 92 (42) 3579 0907
Internet www.kpmg.com.pk

Central Power Purchasing Agency (Guarantee) Limited

Bill N°. 009593

Secretariat Avenue
Islamabad

Date 2 March 2017

NTN/PNTN 4401241-1

Attention : Chief Executive Officer

	PKR
Being our 50% professional fee for services agreed vide our engagement letter no. LT-6187-17 dated 28 February 2017	
Total Value exclusive of Punjab Sales Tax	3,500,000
Punjab Sales Tax on Services @ 5%	175,000
Value inclusive of Punjab Sales Tax	3,675,000

(RUPEES THREE MILLION SIX HUNDRED SEVENTY FIVE THOUSAND ONLY) Total 3,675,000

NTN/PNTN: P0999931-7

KPMG Taseer Hadi & Co., a Partnership firm registered in Pakistan and a member firm of the KPMG network of independent member firms affiliated with KPMG International Cooperative ("KPMG International"), a Swiss entity.

Immediate

No.PF-5(22)/2013
Government of Pakistan
Ministry of Water & Power
Power Coordination, Policy and Finance Wing
__**_**

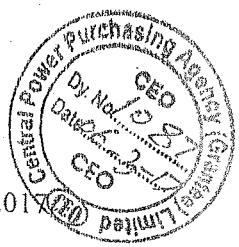

Islamabad, the March 2, 2017

Subject: **ENGAGEMENT OF CONSULTANCY SERVICES FOR TAX MATTERS OF POWER DISTRIBUTION COMPANIES (DISCOS).**

I am directed to inform that proposal by CPPA-G has been approved for the Stage-i Consultancy Services for Sale Tax issues. Further the DISCOs will share the burden equally and Finance Directors of LESCO and IESCO will act a Focal Persons. Furthermore, the CPPA-G will act as Coordinator for the subject case.

2. In view of the aforesaid, it is requested to inform all DISCOs to proceed further in the matter under intimation to this Ministry at the earliest.

CFC
To inform the letter
will arise.
06/03/2017

(Muhammad Saulat Ali)
Section Officer (PF)
Tel: 9209213

The Chief Executive Officer,
CPPA-G, Shaheed-e-Millat Secretariat,
Islamabad.

221

Subject: **ENGAGEMENT OF CONSULTANCY SERVICES FOR TAX MATTERS OF POWER DISTRIBUTION COMAPNIES (DISCOs)**

1. A meeting of representatives from DISCOs and CPPA-G was held in Ministry of Water and Power (MoW&P) on February 14, 2017, and subsequently a meeting was conducted with Secretary Finance and Chairman FBR on February 18, 2017 where in MoW&P inter alia with other matters of DISCOs, intends to have a way through which a mechanism should be developed for the filing of a monthly consolidated sales tax return of all DISCOs at centralized level with an entity to be nominated by MoW&P in order to adjust the continuous excessive input tax claims of certain DISCOs against sales tax liability of other DISCOs.

2. In pursuance of the above meeting and keeping in view the urgency of the matter, CPPA-G was directed to coordinate and initiate discussions with tax consultants having repute and having prior understanding of various taxation matters of DISCOs currently under discussion at various forums and the may be taken on board at MoW&P level.

3. In view of the above, detailed discussion was held with Kamran Iqbal Butt partner of *KPMG Taseer Hadi & Co* (KPMG) and Munwar Ul Islam partner of *Cornelius Lane Mufti* (CLM), both the experts have vast experience of dealing with tax matters and corporate affairs of DISCOs namely LESCO & IESCO. As outcome of the meeting they have shared their engagement terms for performance of tax advisory services as mentioned in detail at *(F/A)*. The cost of which will be Rs 3 million for stage-I and Rs 4 million for stage-II at *(F/B)*. The stage wise cost of tax advisory services will be borne by all DISCOs in equal portion.

4. Further, in order to have proper coordination among the DISCOs for the data and information required by the consultants, the Finance Director of LESCO, IESCO and Taxation Advisor of CPPA-G may be nominated as focal person for the assignment.

5. *Submitted for approval and issuance of letter to all DISCOs with regard to apportionment of the cost of the consultants initially for stage-I and on completion of stage-I later on the letter regarding the apportionment of the cost for stage-II will be issued.*

(Chief Executive Officer) 20/02/2017
CPPA-G

6. ***Joint Secretary (P&F):***

6. Submitted for approval 20.2.17.

7. ***Secretary of Water & Power:***

As proposed

JS (PF) / CEO CPPAG

Joint Secretary (Policy & Finance)
Ministry of Water and Power
Islamabad

Our ref LT-MINISTRY-16

20 February 2017

Dear Sir

Engagement Contract - Sales Tax Compliance and consultancy services

In pursuance to the meeting in Ministry of Water & Power (Ministry), you on behalf of the ministry have requested us and Mr. Munwar ul Islam, Partner Cornelius Lane Mufti (CLM) to provide our combined proposal regarding Sales Tax compliance and consultancy services.

We are pleased to submit our proposal letter for the subject assignment. This proposal will confirm our understanding of our engagement to provide professional services to the MINISTRY and the respective areas of responsibility of the MINISTRY and of KPMG Taseer Hadi & Co (KPMG TH).

1. **Scope of Services**

The Ministry desires a way through which a mechanism can be developed for the filing of a monthly consolidated sales tax return of all electricity distribution companies (DISCOs) in order to adjust the continuous excessive input tax claims of certain DISCOs against sales tax liability of other DISCOs. Further, there are number of issues of DISCOs some of which are pending before ECC committees. Ministry intends to resolve all such issues on consolidated basis with FBR for which it intends to hire consultants for proper presentations before all forums including FBR.

The details of services to be delivered by KPMG and Mr. Munawar ul Islam (herein after referred to as "consultants") under this contract are set out below under two stages:

<u>Stage - 1</u>

a) Consultants will attend initial meetings with the representative of DISCOs and the relevant officials of the Ministry in order to apprise the legal position with respect to the introduction and changes in the relevant legislation necessary for the filing of a monthly consolidated sales tax return.

b) Consultants will examine the existing position of the continuous excessive input tax claims of certain DISCOs and the sales tax liability of other DISCOs in order to devise an internal mechanism for filing of a single consolidated sales tax return.

c) Consultants shall prepare a consolidated summary of all the issues of DISCOs to be settled with FBR and shall convene initial meetings at all forums to apprise the issues and their solutions by suggesting appropriate changes in the relevant laws.

d) The tax issues inter-alia include sales tax issues of FATA and PATA, minimum tax issues of GENCOs and list of issues of all the DISCOs.

e) Consultants shall proceed to review the current laws and regulations in order to assess the relevant changes and the necessary additions required in the existing laws and

regulations in order to support the filing of a single consolidated sales tax return and the resolution of consolidated tax issues of DISCOs.

Stage - 2

f) After initial meetings and assessments, Consultants shall draft the relevant amendments and additions to the existing statutes and the rules made thereunder.

g) Consultants will present the drafted amendments and additions to the existing statutes and the rules made thereunder before the Ministry and appraise the likelihood of successful implementation of the drafted amendments and additions.

h) Consultants will make representations before the Federal Board of Revenue (FBR) and the associated fora, on behalf of MINISTRY if such a need arises.

i) Finalization of the amendments and additions to the existing statutes and the rules made thereunder after consideration of the input of the FBR and the associated fora.

j) Attending all the final meetings where needed to make representations at all fora for making these amendments ready to be implemented after approvals of the competent authorities following the appropriate legal process.

2. **Description of Deliverables**

We will indicate within our deliverables the sources of information presented. We will not seek to establish the reliability of those sources by reference to evidence indepdent of MINISTRY. We will, however, satisfy ourselves, so far as possible, that the information presented is consistent with other information that is made available to us in the course of our work in accordance with the terms of this engagement.

3. **Timetable**

The assignment would be valid till 30th June 2017 and by that time all the required actions on both sides shall be completed. A timetable for deliverables shall be agreed through mutual consnet. Where required, Minsitry shall be responsible for arranging the meetings with all the concerned fora and any delay on their part shall bring no extra resposibilty on the consultants inclcuing the extension in closure date of the assignment mentioned in first line of this para.

To enable us to perfom the services, you shall supply promptly all information and assistance and all access to documentation in your possession, custody or under your control or with personnel under your control where required by us. You shall use your best endeavors to procure the information and documentation when not in your possession or custody or under your control. You shall inform us of any information or developments which may come to your notice and which might have a bearing on the services covered under this engagement. Where a delay in provisions of information causes additional time or expenses to be spent by us in delivering the services, we reserve the right to increase our charges to cover that additional time and expenses.

4. **Description of Fee Arrangements**

224

4.1 **Our fee**

Our professional charges for the services mentioned under point 1 above shall be as follows:

Sr. No	Description	KPMG FEE in Rupees
1	Fee for stage 1	3,000,000/-
2	Fee for stage 2	4,000,000/-
	Total	7,000,000

Please note that 50%f of the total fee amount shall be payable at the time of signing of this contract.

Please note that the above mentioned fees include travelling, accommodation, TA/DA and all types of out of pocket expenses excluding sales tax on services which shall be charged over and above the stated fees.

If there is any change in scope of work, it will be communicated to and agreed with MINISTRY and will be billed in addition to the above quoted figure on actual time spent basis on the firm's standard scale of charges or mutually agreed.

Our invoices should be subject to present terms and conditions contained in clause 9 of Standard Terms & Conditions attached.

5. **Engagement team**

The engagement team from KPMG will be led by Kamran Iqbal Butt as Engagement Partner and will include Muhammad Atiq ur Rehman as Engagement Director and other professionals of appropriate levels whose services will be considered necessary to carry out the scope of work under this engagement.

We shall use reasonable endeavour to ensure that individuals identified in this engagement are being involved in the services are so involved. However, we may substitute / involve other staff of equal or similar skills and experience.

6. **Standard terms and conditions**

We will accept this engagement [and will commence work] on the basis that our Standard Terms and Conditions as set out in Annexure "B", will apply to this work and govern our relationship with you. This letter is the 'engagement letter' mentioned in our Standard Terms and Conditions. Please read these Standard Terms and Conditions carefully in conjunction with the contents of this engagement.

If you are in agreement with the terms of this engagement (and all appendixes and/or attachments), please sign and return one copy to us. If you require further information or clarification, please contact Mr. Kamran Iqbal Butt.

Yours faithfully,

I have read and understood the terms and conditions of this engagement letter (including any appendixes and attachments) and I agree to and accept them.

Signature _____
Name _____
Designation _____
Date _____

(for and on behalf of Ministry of Water and Power)

M. Zargham Eshaq Khan
Joint Secretary (Power)
Ministry of Water & Power
Government of Pakistan
Islamabad.

cc.

Chief Executive Officer - Central Power Purchasing Agency (Guarentee) Limited

S.No-11

Central Power Purchasing Agency Guarantee Limited

A Company of Government of Pakistan

CPPA

PHONE 051-9216956

OFFICE OF THE
Manager Corporate Accounts CPPA-G
4th Floor, ENERCON Building, Islamabad

NO.MF/(T)/CPPA/IOT/ 23596

DATED:- 24-05-2017

FINANCE DIRECTOR
PESCO, PESHAWAR.

SUBJECT: DEBIT MEMO FOR Jun-16

Please find enclosed herewith Debit Memo details as below pertains to your company for necessary and early adjustment at your end.

SR.NO	DEBIT MEMO NO.	MONTH	AMOUNT	ENCLOSURES
1	PPA-232/PESCO-20	Jun-16	46,719,524.70	

OFFICE THE GENERAL MANAGER FINANCE PESCO HQ PESHAWAR

ASSTT: MANAGER (C.A)
RECEIVEABLE PAYABLE/IOT

6269
26/5/17.

AM CPC pls prepare copy to Pesco's payable

227

CPPA

CENTRAL POWER PURCHASING AGENNCY GURANTEE LTD

			J.V NO:	MONTH:
DISCOs	A/C HEAD	RATIO	DR	CR
LESCO	150106	24	112,126,859.28	
FESCO	150107	14	65,407,334.58	
MEPCO	150108	15	70,079,287.05	
QESCO	150109	6	28,031,714.82	
GEPCO	150110	11	51,391,477.17	
IESCO	150111	10	46,719,524.70	
PESCO	150112	10	46,719,524.70	
HESCO	150113	5	23,359,762.35	
TESCO	150118	1	4,671,952.47	
SEPCO	150137	4	18,687,809.88	
TOTAL (DISCOs)		100	**467,195,247.00**	
GENCO-I	150102	30	34,596,133.20	
GENCO-II	150103	30	34,596,133.20	
GENCO-III	1060104	30	34,596,133.20	
GENCO-IV	150117	10	11,532,044.40	
TOTAL (GENCOs)		100	**115,320,444.00**	
TOTAL(DIS+GEN)			**582,515,691.00**	
PEPCO	290119000		1,128,556	
PEPCO (CEP)	190119006		4,903,049	
				20,066
PMU	150119001			12,280,000
M&S	150119002			40,200,000
M.D POWER	150119003			241,228,256
C.A PEPCO	150119004			42,594,000
SR B&O(TH)	150119005			116,449,000
C.E (P&D)	150119006			22,524,000
REO	15011907			18,745,000
M.D PEPCO	150119008			94,506,974
G.TOTAL			**588,547,296.00**	**588,547,296**

S.No. iii

Central Power Purchasing Agency Guarantee Limited

A Company of Government of Pakistan

PHONE 051-9216956

OFFICE OF THE
Manager Corporate Accounts CPPA-G
4th Floor, ENERCON Building, Islamabad

NO.T F/(T)/CPPA/IOT/ 3251

DATED:- 21/4/17

FINANCE DIRECTOR
PESCO, PESHAWAR.

SUBJECT: DEBIT MEMO FOR Mar-17

Please find enclosed herewith Debit Memo details as below pertains to your company for necessary and early adjustment at your end.

SR.NO	DEBIT MEMO NO.	MONTH	AMOUNT	ENCLOSURES
1	PPA-25/PESCO-01	Mar-17	300,000.00	5

5723
26/04/17

OFFICE THE GENERAL MANAGER FINANCE PESCO HQ PESHAWAR
ADMN | COMP
PAYMENT | IOT
BANKING | RECEIVABLE
PENSION | BUDGET
CPLC

ASSTT: MANAGER (C.A)
RECEIVEABLE PAYABLE/IOT

229

Central Power Purchasing Agency Guarantee Limited

A Company of Government of Pakistan

CPPA

Manager Corporate Accounts CPPA (G) Ltd
ENERCON BUILDING BLUE AREA, ISLAMABAD.

DEBIT NOTE

:FERNECE: JV IMPREST Mar-17

PPA-25/PESCO-01

SUING OFFICE Manager Corporate Accounts CPPA (G) Ltd

:CEIVING OFFICE: FINANCE DIRECTOR, PESCO, PESHAWAR.

Dated: Mar-17

have Debited your account for the amount of Rs. 300,000.00

ree Hundred Thousand Rupees and Zero Paisa

ing the Debit raised on account of payment made to M/s KPMG Taseer Hadi & Co Lahore against Tax Advisory vices provided on the instructions of Ministry of Water & Power on your behalf during March, 2017 as per cu ts attached

CCOUNT CODE	DESCRIPTION	DEBIT	CREDIT
150112	TRADE DEBTORS	300,000.00	
	TOTAL	300,000.00	

EPARED BY

CHECKED BY

APPROVED BY

230

Central Power Purchasing Agency Guarantee Limited
A Company of Government of Pakistan

Payment Voucher

(21)

Division CPPA-G Ltd.

PAYEE M/S KPMG
Taseer Hadi & Co.
LHR.

P.V. No.	
Date.	08-3-2017
Cheque #.	22262728

Particulars	Details	Code	Amount	
Debitable to discose			Rs. 3000000/-	
			(-) 300000	10% 1.5 Tax
PPA-25/PRC-1				
Total: -			Rs. 2700000/-	

Rupees twenty Seven Lac Only-

Prepared by

Checked by

Approved by

Received by

231

Payment of the Tax Advisory on behalf of DISCOs

PUC is the invoice received from the KPMG against tax advisory services provided on the instructions of the Ministry Water and Power. As per letter received from the Ministry the total cost will be shared equally by all DISCOs. The Consultants had already working therefore to avoid upfront collection of funds from all DISCOs it is suggested that this office may pay Rs. 3 million and debit the DISCOs equally.

Submitted for approval of stage I payment of Rs. 3 Million to KPMG.

CFO CPPA. 7/3/17

CEO CPPA.

07/03/2017

CFO

7/3/17

D.D.O

CHARGEABLE TO 3000000/-
PASSED FOR RS. 3000000/-
DEDUCTION RS. 300000/-
NET PEYABLE RS. 2700000/-
RUPEES Twenty Seven Lac Only

ASSISTANT MANAGER-CA (ESTAB.)
CPPA-G G-5/2 ISLAMABAD

ANNEX-V

F.D PESCO

No.PF-05(02)/2012.
Government of Pakistan
Ministry of Energy (Power Wing)
Power Coordination, Policy and Finance Wing
__**_**_**

Islamabad, July 04, 2019.

Subject: **CASH AND NON-CASH SETTLEMENT FOR POWER SECTOR RS.3/KWH SUBSIDY ANNOUNCED BY THE PRIME MINISTER FOR THE INDUSTRIAL SECTOR AND AJ&K DUES.**

I am directed to state that the ECC of the Cabinet in its meeting held on June 10, 2019 considered the subject Summary and approved proposals at para-8 (a) and 8(b) of the summary with modification, vide decision **No. ECC 243/20/2019 dated June 19, 2019** as follows:

"..... And approved the proposals contained in Para 8 (a) and (b) of the summary with the following modification:

Para 8 (a) of the Summary

.....

ii) Adjustment of Payable ISP and AJK subsidy will be made through Memorandum authorization by Finance Division.

.....

2. Relevant portion of Para 8 i.e. Sub-para (b), of the summary dated June 10, 2019 is reproduced:

" (b) On account of AJ&K receivables of three DISCOs i.e. Rs. 119.05 billion (IESCO Rs. 80.58 billion + GEPCO Rs. 15.08 billion + PESCO 23.39 billion), Rs 18.6 billion are on account of taxes. From the balance Rs. 100.5 billion (119.05-18.6), Rs 27 billion will be adjusted as cash @ Rs 9 billion per year, Rs 16 billion as non-cash against the re-lent loans for the aforementioned DISCOs and the balance Rs 57.5 billion as equity in the DISCOs in ratio equivalent to the percentage share of their outstanding liabilities against CPPA. Claims of AJK subsidy beyond June 30, 2019 will be dealt with in accordance with agreement of GoAJK.."

3208 30/7/19

3. The decision of the ECC of the Cabinet is hereby communicated for information and further necessary action for implementation of the decision. Further it is therefore requested that submit the implementation report to this Division on priority basis.

3 Secs ② copies pl

ADG Coml,

(Rao M. Rizwan Ahsan)
Section Officer (PF)
Tele: 9206213

Distribution:

i. Secretary, Finance Division, Islamabad.
ii. Chief Secretary, Government of AJ&K, Muzafarabad.
iii. Managing Director, PEPCO, WAPDA House Lahore.
iv. Chief Executive Officer, CPPA, Islamabad.
v. CEO GEPCO
vi. CEO IESCO
vii. CEO PESCO

For Information:

1. SO to Secretary (Power Division), Islamabad.
2. PS to Joint Secretary (PF), Islamabad.

Dm(Fin) 3339 7/10/19 Discuss with o/s requirement 9-7-19

Fin Dte... Payable Pl...

Alocpc / Am compiled please dlf 01/08/19

3792 15-7-19

5092 Dated 20-7-19

PESHAWAR ELECTRIC SUPPLY COMPANY LIMITED

Tel: 9212025
Fax: 9211987

OFFICE OF THE
CHIEF EXECUTIVE OFFICER
PESCO, PESHAWAR

No:3439-384 /FD/PESCO/CP&C

Dated:22/02/2016

Registrar
National Electric Power Regulatory Authority,
NEPRA Tower, Attaturk Avenue,
G-5/1, Islamabad.

Subject: **Minutes of meeting of the Sub-Committee formed on the new Electricity Tariff for AJ&K beyond 30.09.2003**

Enclosed find herewith the minutes of the subject meeting held in Ministry of Water & Power, Islamabad on 08.12.2015 under the chairmanship of Secretary Ministry of Water and Power communicated vide section officer letter No. PF-05(19)/2013 dated 11-02-2016 where in it was decided that, in the light of clause 5.2 b of the Mangla Dam Raising Agreement, executed between Ministry of Water & Power, Wapda & Government of AJ&K, tariff beyond September 2003, for AJ&K is to be fixed by GoP on the recommendation of a sub-committee notified by Ministry of Kashmir Affairs & Norther Areas and Frontier Regions.(Now Ministry of Kashmir affairs and Gilgit Baltistan).

Accordingly the Sub-Committee constituted recommended that the Tariff of AJK may be linked with the domestic tariff as applicable for 1-100 units category because of the fact that 80% of the AJK consumers are domestic. It is therefore requested that the recommendation of the sub-committee maybe considered while determining PESCO tariff for FY-2015-16.

CHIEF EXECUTIVE OFFICER
PESCO PESHAWAR

CC.

1. Secretary Ministry of Water and Power, Islamabad.
2. Chief Financial Officer, PEPCO Room No. 728 Wapda House, Lahore

Ministry of Water and Power
Power Coordination, Policy and Finance Wing
****

Islamabad the 11th February 2016

Subject: **MINUTES OF MEETING OF THE SUB-COMMITTEE FORMED ON THE NEW ELECTRICITY TARIFF FOR AJ&K BEYOND 30.09.2003.**

I am directed to refer to the subject noted above and to enclose Minutes of the subject meeting held in Ministry of Water & Power on **08.12.2015** for information and further necessary action.

11/2/2016

(Muhammad Farhan)
Section Officer PF
Tel: 9209213

1. **The Secretary** Ministry of Kashmir Affairs & Gilgit Baltistan Islamabad
2. **The Chief Secretary** AJ&K, Government of AJ&K , Muzaffarabad.
3. **The Chairman** WAPDA , WAPDA House Lahore
4. **The Joint Secretary (PF)** Finance Division, Islamabad

FD
pl discuss
17/2/16

For information:

1. **The Secretary**, Law and Justice Division , Islamabad
2. **The Chairman NEPRA**, Islamabad
3. **The Secretary**, Secretariat Electricity/Power Development Organization ,Azad Government of the State of Jammu and Kashmir, Muzaffarabad
4. **THE Chief Executive Officer**, GEPCO, Gujranwala
5. **THE Chief Executive Officer** IESCO, Islamabad
6. **THE Chief Executive Officer**, PESCO, Islamabad
7. **The General Manager (R & CO)**, PEPCO, WAPDA House, Lahore.

PESHAWAR OFFICE THE GENERAL MANAGER FINANCE PESCO HQ
ADMIN | COMP
PAYMENT | IOUT
PLANNING | S.PAYABLE
PENSION | BUDGET
CP & C | TAXATION

3-2-16

CC

i. SPS to Minister, for Water and Power.
ii. PS to State Minister for Water and Power Islamabad
iii. PSO to Secretary, Ministry of Water and Power.
iv. SPS to Additional Secretary (P), Ministry of Water and Power.
v. SPS to Additional Secretary (A&W), Ministry of Water and Power
vi. APS to Joint Secretary (Power), Ministry of Water and Power.
vii. APS to Joint Secretary (E&D), Ministry of Water and Power
viii. PA to Deputy Secretary (Power) , Ministry of Water & Power

2174
15/2/2016

17/2

235

Government of Pakistan
Ministry of Water & Power
Power Coordination, Policy and Finance Wing

MINUTES OF MEETING OF THE SUB-COMMITTEE FORMED ON THE NEW ELECTRICITY TARIFF FOR AJ&K BEYOND 30.09.2003.

According to the clause 5.2 b of the Mangla Dam Raising Agreement executed between Ministry of Water & Power, WAPDA and Government of AJ&K, power tariff beyond September, 2003 for AJK is to be fixed by GoP on the recommendation of a Sub-Committee notified by Ministry of Kashmir Affairs & Northern Areas, States and Frontier Regions (Now Ministry of Kashmir Affairs & Gilgit Baltistan).

2. Former Ministry of KANA & SAFRON vide Notification No. 3/10/92 dated 21.05.2003 constituted following Sub-Committee to firm up its recommendations regarding rate of new electricity tariff for AJ&K beyond 30.09.2003;

i.	The Secretary Water and Power	Chairman
ii.	The Chairman WAPDA	Member
iii.	The Chief Secretary AJ&K	Member
iv.	The Joint Secretary (PF).Finance Division	Member
v.	The Joint Secretary KANA and Saffron	Member

3. The second meeting of the Sub-Committee was held under the chairmanship of Secretary, Water and Power on 08.12.2015 in Ministry of Water & Power, Islamabad. List of the participants is attached as **Annex-I.**

4 The meeting started with recitation of holy Quran. The Secretary welcomed the participants and briefly highlighted the history of the subject issues. The Secretary Water and Power informed the participants that Government of AJ&K is paying @ Rs. 2.59 against the NEPRA determine tariff of Rs. 18.00 peak and Rs. 12.20/ kWh off peak (Rs. 12.77/kwh average). Finance Division provided subsidy till 2011 and withdrew it afterwards unilaterally. AJ&K is currently receiving electricity of Rs. 17 billion / year @ NEPRA's determined tariff. However, AJ&K is paying at flat rate of 2.59/kwh which is not viable for DISCOs providing electricity to AJ&K i.e. PESCO, GEPCO and IESCO. The General Manager R&CO apprised the participants that total receivables created due to this difference from AJK towards all three DISCO's stands at Rs. 59.47billion (GEPCO = Rs. 7.04 billion, PESCO = Rs. 12.46 billion, IESCO = Rs. 39.69 billion). At that point Secretary Water and Power apprised that the AJ&K has become the biggest defaulter of the power sector. However, the Government of AJ&K neither pursued the case in NEPRA for correction of tariff category nor asked Finance Division to restore the subsidy or allocate appropriate amount as per their billing in its annual budget. It is also a matter of fact that more than 80% consumers of AJ&K are Domestic but NEPRA is giving commercial tariff. Resultantly the receivables have soared to Rs. 60 billion approximately. The General Manager R&CO added that current rate of losses in AJ&K is 37 %.

5. The Chief Secretary AJ&K apprised that they had held a high level meeting with Finance Minister wherein it was interalia decided to frame recommendations for resolution of issues being faced by the AJ&K. Subsequently, issues being faced by the AJ&K regarding the Ministry of Water and Power are as under:

a. *Tariff rationalization for AJ&K*

b. *Exploitation of hydropower development by Power Development Organization*

c. *Tripartite agreement on Neelum Jhelum Hydropower Project*

TARIFF RATIONALIZATION FOR AJ&K:

i. The Chief Secretary AJ&K apprised that they are taking electricity from national grid on concessional tariff in pursuance of Mangla raising project. The Secretary Water and Power informed that currently 380 MW @ Rs. 2.59/kwh is being supplied to AJ&K. However, the actual rate which is determined by NEPRA is Rs. 18/ kwh for peak hours and Rs. 12.20 / kwh for off peak. Until 2011 there was no issue of receivables of the DISCOs on AJ&K account. In 2011, Finance Division unilaterally withdrew the subsidy being provided to the AJ&K. The issue was amplified by NEPRA's determination where AJ&K was determined to charge commercial despite the fact that more than 80% consumers are domestic. The issue was neither highlighted by the DISCOs nor objected by the Government of AJ&K. This reinforced the receivables which have now surged to Rs. 60 billion which are destabilizing the power sector.

ii. The Chief Secretary AJ&K proposed to resolve the issue in light of Terms of References framed for the sub-committee constituted under Mangla raising dam in 2003 as it encircled the all issues being faced by the AJ&K power sector .

iii. During the meeting it was informed that according to the clause 5.2 b of the Mangla raising project agreement, power tariff beyond September, 2003 for AJK was to be fixed by GoP on the recommendation of a Standing Sub-Committee notified by Ministry of KANA & SAFRON. The General Manager R&CO further apprised that power tariff for AJ&K was decided on the basis of following guidelines issued in the meeting held on 11.09.2003:

a. *"The power tariff for AJK from 1st October, 2003 shall be Rs. 2.59 per unit. The basis of this decision was that WAPDA charges Rs. 2.58 per unit from domestic consumers upto 100 units. The AJK Government agreed to reduce losses from 37.5% to 27%. Accordingly, the rate per unit should be Rs. 2.60. The Committee agreed to take the average of these tow rates at Rs. 2.59 per unit.*
b. *Since the AJK Government do not have provision in their current year's budget to pick up additional liability of Rs. 0.27 per unit, the Sub-Committee recommended that the finances required in this regard would be provided by the Federal Government.*
c. *The reduction in line losses will be reviewed on monthly basis and any financial gains from reduced losses would be adjusted to reduce the Government subsidy".*

iv. The Joint Secretary (Power Resources) Water and Power informed the participants that currently 1.4 billion units are being supplied to AJ&K with average billing of around Rs.18 billion. However, the DISCOs were receiving only Rs. 3.578 billion only and the rest of the amount was going into circular debt, It is a matter of fact that the AJ&K has only Rs. 4 billion budgetary provision on account of electricity charges against the Rs. 18 billion billing.

v. The Secretary, Water and Power agreed with the proposal of the Chief Secretary AJ&K and decided to frame recommendations on same analogy as agreed by the Sub Committee on "Power supply tariff for AJ&K" in its meeting held on 11.09.2003 and subsequently signed by the all stakeholders, keeping in view of new tariff determinations.

vi. The following proposals were presented to the participants by the Secretary Water and Power.

a. *There is a need to rationalize the tariff structure in AJ&K as more than 80% consumers are domestic and NEPRA is giving commercial tariff to them. These domestic consumers fall in 1-100 units category.*

b. *NEPRA be asked to give domestic tariff applicable for 1-100 units category to the consumers of AJ&K in pursuance of the agreement* signed by the Sub Committee on "Power supply tariff for AJ&K" in its meeting held on 11.09.2003. *The Current tariff for domestic consumers applicable for 1-100 units i.e. Rs. 5.79/kwh should be proposed for determination by NEPRA.*

c. *AJ&K will reduce the line losses from 37 % to 27% as per the agreement signed* by the Sub Committee on "Power supply tariff for AJ&K" in its meeting held on 11.09.2003.

d. *Finance Division will allocate the tariff difference of total receivables and total billing in Budget.*

e. *The agreed minutes of the meeting will be signed by both parties which will be binding for both the parties.*

EXPLOITATION OF HYDROPOWER DEVELOPMENT BY POWER DEVELOPMENT ORGANIZATION

It was decided that CPPA should proceed for finalization of PPA regarding 30.4 MW Jagran-I Hydropower Project, AJK between CPPA and AJ&K PDO and submit the same to NEPRA for tariff approval.

TRIPARTITE AGREEMENT ON NEELUM JHELUM HYDROPOWER PROJECT

The Chief Secretary informed that there is a tripartite agreement on Neelum Jhelum hydropower project pending with Water and Power on issue of Net Hydel Profit / Water Usage Charges. The Secretary Water and Power apprised that the issue will be resolved in the light of the provisions of the Constitution of Islamic Republic of Pakistan. Further, Joint Secretary (Water) Ministry of Water & Power will meet with representatives of AJ&K and finalize recommenadtions.

6. After due deliberations the following decisions were taken:

i. *The tariff for AJK was earlier fixed by standing subcommittee in 2003 in accordance with procedure laid down in Mangla Dam Raising Agreement and subsequent agreement signed by the Secretary Water and Power, SAFRON and Chief Secretary AJ&K on 11.09.2003. Following the same analogy, the tariff for AJK should be fixed at Rs 5.79 /KWH which is the rate of 1-100 unit slab of domestic category, as majority of electricity consumption in AJK falls in lower tariff bracket of domestic category in the schedule of electricity tariff. This tariff to remain applicable from 01-07-2015 till next tariff determination. Such policy decision may be taken to NEPRA, jointly by both the parties for determination.*

ii. *GoAJ&K will move the Finance Division GoP to clear the stock of dues which have piled from 2011 onwards, amounting to around Rs. 60 billion.*

iii. *The signing of tripartite agreement regarding NJHP among WAPDA, GoP and GoAJK should be expedited. Joint Secretary (Water) will meet with representatives of AJ&K and putup recommenadtions in accordance with the Constitution of Islamic Republic of Pakistan*

iv. *It was decided that CPPA should proceed for finalization of PPA regarding 30.4 MW Jagran-I Hydropower project, AJK between CPPA and AJK-PDO and submit the same to NEPRA for tariff approval.*

7. The meeting ended with vote of thanks to and from the Chair.

ADDENDUM:

The draft "Minutes" of the meeting were forwarded to the Government of AJ&K for vetting before formal issuance to all stakeholders in pursuance of decision taken during the said meeting. Government of AJ&K vide letter No. SE/PS/70-82/ 2016 dated 27.01.2016 conveyed that the Prime Minister Government of AJ&K has accorded approval **(attached as Annex-II).** The matter was again deliberated be Ministry of Water & Power. Subsequently following recommendations are being presented to the Competent forum for consideration/ approval as:

a. *NEPRA's determined tariff for 1-100 unit slab of domestic category will be applicable for AJ&K* from 01-07-2015, *currently* which is Rs. 5.79/kwh. Current billing will be made at that tariff till next tariff determination of 2015-16.

b. Finance Division may provide sufficient budget for AJ&K electricity bill which for the year 2015-16 is expected to be around Rs.8.0 billion. Currently the budgetary amount is around Rs. 4 billion, which is insufficient. Appropriate provisioning in AJ&K budget will eliminate any financial built up or need for electricity subsidy for AJ&K .

c. *Finance Division will clear the stock of dues which have been piled from 2011 onwards, amounting to around Rs. 60 billion till December 2015. Finance Division may provide that amount partly from the current budget and the remaining may be provisioned in 2016-2017 budget.*

d. *WAPDA or the Project Companies will pay Water Usage Charges on various projects (including Neelum Jhelum Hydropower Project) to the GoAJ&K as mutually agreed. Further, WAPDA/Project Companies will also be liable to pay any upward enhancement as mutually agreed between the parties (WAPDA/Project Companies & the GoAJK) in future.*

e. *Power Purchase Agreement for Jagran-I HPP will be signed with the CPPA and tariff approval from NEPRA will be obtained*

ANNEX-I

LIST OF PARTICIPANTS

Subject: SETTLEMENT OF OUTSTANDING LIABILITIES AND FUTURE TARIFF FOR AJ&K-SECOND MEETING OF THE SUB-COMITTEE

08-12-2015

MINISTRY OF WATER & POWER

01.	Mr. Mohammad Younus Dagha	Secretary
02.	Mr. M. Zargham Eshaq Khan	Joint Secretary (Power)
03.	Sayed Muhammad Mehar Ali Shah	Joint Secretary (Water)
04.	Mr. Muhammad Farhan	Section Officer (PF)

Finance Division

05.	Mr. Abdul Malik Balghri	Deputy Secretary(PF)

Ministry of Kashmir Affairs & Gilgit Baltistan

06.	Qazi Zaheer Ahmed	Joint Secretary

Law & Justice Division

07.	Mr. Khuram Shahzad	Assistant Consultant

PEPCO

08.	Mr. Muhammad Saleem	General Manager(R&Co)
09.	Mr. Muhammad Ansar	Director General (Com)

PESCO

10.	Mr. Anwar-ul-Haq Yousaf zai	GM (Finance)

GEPCO

11.	Mr. Zahoor Ahmed Chohan	Chief Executive Officer
12.	Mr. Manzoor Hussain	CSD

IESCO

13.	Mr. M. Yousaf Awan	Chief Executive Officer
14.	Mr. Khalid Nazir	DG(CS)
15.	Mr. Waheed Akram	Manager (CS)

Government of AJ&K

16.	Dr. Tashfeen Khan	Chief Secretary
17.	Mr. Farhat Ali Mir	Secretary Forest
18.	Mirza Wajahat Rashid	Secretary Electricity & PDO
19.	Mr. Mushtaq Ahmed	MD Power Development Org.
20.	Mr. Abid Hussain Awan	DG (Com) Electricity & PDO
21.	Mr. Zafer Iqbal	Director Power Development Org.

240

(Annex-II)

No.SE/PS/70-82 /2016
AZAD GOVERNMENT OF THE STATE OF JAMMU & KASHMIR
ELECTRICITY/PDO DEPARTMENT

Secretary

Muzaffarabad
27th January,2016

→ The Joint Secretary (Power & Finance),
Ministry of Water & Power,
Government of Pakistan,
Islamabad

SUB: **MINUTES OF MEETING OF THE SUB-COMMITTEE FORMED ON THE NEW ELECTRICITY TARIFF FOR AJ&K BEYOND 30.09.2003**

Please refer to the draft "Minutes" forwarded to GoAJK vide No. PF-05(19)/2013, dated 23.12.2015, and subsequent communication on the subject.

2. The draft "Minutes" were shared with the Prime Minister of the Government of Azad Jammu & Kashmir, who has accorded following approval:

i. The power tariff for AJ&K will be Rupees 5.79/kwh from 1-7-2015 till next tariff determination.

ii. The issue of arrears will be taken up with the Ministry of Water and Power and Finance Division separately.

iii. Sections 2.3 & 2.3.1 of the draft Tri-partite Agreement of Neelum-Jhelum Hydro Power Project will be replaced as under:

"2.3 *The WAPDA shall pay to the GoAJ&K, Net Hydel Proceeds/Water Use Charges/Royalty from Neelum Jhelum Hydro Power Project with effect from the Commercial Operation Date of the project @ Rupees 0.425/kwh. Provided that, WAPDA shall also be liable to pay any upward enhancement approved in case of KPK or other provinces of Pakistan in future."*

iv. Power Purchase Agreement for Jagran-I HPP will be signed with the CPPA and tariff approval from NEPRA will be obtained.

27/1/16
FAYYAZ ALI ABBASI
Secretary
Electricity/PDO

C.C.

1. Secretary to the Prime Minister, GoAJ&K.
2. The Chief Secretary, GoAJ&K.
3. The Additional Chief Secretary P&D, GoAJ&K

241

ANNEX-

Central Power Purchasing Agency Guarantee Limited

A Company of Government of Pakistan

CPPA

PHONE 051-9216956

OFFICE OF THE
Manager Finance (B&R) CPPA-G
Shaheen Plaza, G-06, Blue Area, Islamabad

NO.M(B&R)/CPPA-G/Rec 16737

DATED: 29-07-19

FINANCE DIRECTOR
PESCO, PESHAWAR.

SUBJECT: CREDIT MEMO FOR Jun-19

Please find enclosed herewith Credit Memo details as below pertains to your company for necessary and early adjustment at your end.

SR.NO	CREDIT MEMO NO.	MONTH	AMOUNT	ENCLOSURES
1	PPA-301/PESCO-31	Jun-19	7,642,000,000.00	1

29/7/19

DY: MANAGER (RECOVERY)
CPPA-G

OFFICE OF FINANCE DIRECTOR PESCO HQ PESHAWAR

ADMIN	SGMP
PAYMENT	IOT
BANKING	R PAYABLE
PENSION	BUDGET
CP&C	TAXATION

3268
02/08/19

DM(CRC)
Discuss
07/08

DM(R&P)

Am computation please discuss
02/08/19

ABO(R/P)
for n.a
Ali/07/08

Central Power Purchasing Agency Guarantee Limited
A Company of Government of Pakistan

SETTLEMENT OF NON CASH ADJUSTMENT

PPA-301/PESCO-31

ISSUING OFFICE: Central Power Purchasing Agency (Gurantee(Limited
Effective Date: 30.06.2019

RECEIVING OFFICE: Chief Financial Officer, PESCO, PESHAWAR.
Issue Date: 24.07.2019

Your account has been credited for the amount Rs 7,642,000,000.00

Seven Billion Six Hundred Forty Two Million Rupees and Zero Paisa

Being the Credit of Non Cash Settlement for ISPA as per decesion of ECC of the Cabinet communicated vide MoE (Power Wing) No,PF-05(02)/2012 dated.03.07.2019 (copy attached).The ISPA verified by your company as per engineering advisor (MoE) comes to Rs. 9.65 Bln for which the following is being adjusted.

DESCRIPTION	DEBIT	CREDIT
Due from Principal		4,573,000,000.00
Against UoSC Payable to NTDC(01 Jun-2015 to 30 Jun-2019)		3,069,000,000.00
TOTAL		7,642,000,000.00

PREPARED BY

CHECKED BY

APPROVED BY

Central Power Purchasing Agency (Grantee) Limited
CEO
Dy. No. 3330
Date 8-7-19
CEO

No.PF-05(02)/2012.
Government of Pakistan
Ministry of Energy **(Power Wing)**
Power Coordination, Policy and Finance Wing
--**-**-**

Islamabad, July 3, 2019.

Subject: **CASH AND NON-CASH SETTLEMENT FOR POWER SECTOR RS.3/KWH SUBSIDY ANNOUNCED BY THE PRIME MINISTER FOR THE INDUSTRIAL SECTOR AND AJ&K DUES..**

I am directed to state that the ECC of the Cabinet in its meeting held on 25th June, 2019 considered the subject Summary and approved para-5 of the summary vide decision **No. ECC 270/21/2019 dated 25th June, 2019.**

2. Para-5 of the summary dated 25th June, 2019 is reproduced:

> *"ISP claims of XWDISCOs payable by MOF as on May 2019 be allowed as non-cash adjustment against Federal Government outstanding re-lent loan receivable as on 30-06-2018 from Chashma Nuclear Power Plants (Pakistan Atomic Energy Commission, PAEC) Rs. 23 billion, WAPDA Rs.16.24 billion and NTDC Rs. 37.77 billion against the payable of power sector to same entities through book adjustment at the level of CPPA."*

3. *The ECC further decided that:*

> *"the subsidy of Rs.3/Kwh/unit for ISP will continue to be provided to the industrial consumers on usage of electricity only during peak hours, whereas subsidy for off peak hours usage will be discontinued with effect from July, 01, 2019."*

4. The decision of the ECC of the Cabinet is hereby communicated for information and further necessary action for implementation of the decision. Further it is therefore requested that submit the implementation report to this Division on priority basis.

CFO (CPPA-G)
Dy. No. | Dt:
Dy. GMF-I | Dy. GMF-II
Dy. GMF (CA&T)

(Rao M. Rizwan Ahsan)
Section Officer (PF)
Tele: 9209213

Distribution:

i. Secretary, Finance Division, Islamabad.
ii. Chief Secretary, Government of AJ&K, Muzafarabad.
iii. Chairman WAPDA, WAPDA House, Lahore.
iv. Managing Director, PEPCO, WAPDA House Lahore.
v. Chief Executive Officer, CPPA, Islamabad.
vi. Managing Director, NTDCL, WAPDA House, Lahore.
vii. CEO, PITC, WAPDA House, Lahore
viii. Chairman, PAEC, Islamabad.

For Information:

1. SO to Secretary (Power Division), Islamabad.
2. PS to Joint Secretary (PF), Islamabad.

CFO (CPPA-G)
Dy. No. 7131 | Dt: 9/7/19
Dy. GMF-I | Dy. GMF-II

CTO	
CFO	
CLO	
Company Secretary	
DG HR/Admin	
Chief Information Officer	
DGM SMD	
DGM CA&T	
Manager ERP	
SO Finance	
SO Technical	

DM Rao
8/7

For n/a in 30th June, financial
8/7/2019

DY. GMF (CA&T) 9/7

Government of Pakistan
FINANCE DIVISION
(Regulations Wing)
>>><<<

No.F.3 (9) R-4/2004-MG

Islamabad August 07, 2019

OFFICE MEMORANDUM

Subject: **GRANT OF ADHOC RELIEF ALLOWANCE-2018 @10% & ARA -2019 @ 5% OF BASIC PAY TO MANAGEMENT GRADES OFFICERS (M-I, M-II, M-III).**

The undersigned is directed to refer to the subject noted above and to say that the Federal Government has granted ARA-2018 @10%of basic pay to the Management Grades (M-I, II & III) w.e.f. 01-07-2018 and ARA-2019 @ 5% of basic pay w.e.f. 01-07-2019 to Management Grade-III, till further orders.

2. The amount of Adhoc Relief Allowance-2018 and 2019:

i) will be subject to income tax.

ii) will be admissible during leave and entire period of LPR except during extra ordinary leave.

iii) will not be treated as part of emoluments for the purpose of calculation of pension/gratuity and recovery of House Rent

iv) will not be admissible to the employees during the tenure of their posting/deputation abroad.

v) will be admissible to the employees on their repatriation from posting/deputation abroad at the rate and amount which would have been admissible to them, had they not been posted abroad.

3. The terms "Basic Pay" for the purpose of Adhoc Relief Allowance-2018 and 2019 will also include the amount of personal pay granted on account of annual increment (s) beyond the maximum of the existing pay scales.

4. The above Adhoc Relief Allowance-2018 and 2019 shall be accommodated from within the budgetary allocation for the respective Ministries/Divisions/Departments and no supplementary grants would be given on this account.

(Muhammad Anwar Javaid)
Section Officer (R-4)

ALL MINISTRIES/DIVISIONS/ DEPARTMENTS.

Copy to: Web-Master Finance Division with the request to upload the same.

245

GOVERNMENT OF PAKISTAN
FINANCE DIVISION
(Regulations Wing)
FBC Building, Near State Bank of Pakistan
***

F.No.1(2)Imp/2018-370 Islamabad, the 2nd July, 2018

OFFICE MEMORANDUM

Subject:- GRANT OF ADHOC RELIEF ALLOWANCE-2018 @ 10% OF BASIC PAY OF THE CIVIL EMPLOYEES OF THE FEDERAL GOVERNMENT

The President has been pleased to sanction with effect from 1st July, 2018 and till further orders, an Adhoc Relief Allowance-2018 @ 10% of basic pay to all the civil employees of the Federal Government as well as the civilians paid from Defence Estimates including contingent paid staff and contract employees employed against civil posts in Basic Pay Scales on standard terms and conditions of contract appointment.

2. The amount of Adhoc Relief Allowance-2018:

i) will be subject to Income Tax.

ii) will be admissible during leave and entire period of LPR except during extra ordinary leave.

iii) will not be treated as part of emoluments for the purpose of calculation of Pension/gratuity and recovery of House Rent.

iv) will not be admissible to the employees during the tenure of their posting/deputation abroad.

v) will be admissible to the employees on their repatriation from posting/deputation abroad at the rate and amount which would have been admissible to them had they not been posted abroad.

3. The term "Basic Pay" for the purpose of Adhoc Relief Allowance-2018 will also include the amount of the personal pay granted on account of annual increment (s) beyond the maximum of the existing pay scales.

4. The above Adhoc Relief Allowance-2018 shall be accommodated from within the budgetary allocation for the year 2018-19 by the respective Ministries/Divisions/Departments and no supplementary grants would be given on this account.

(Faisal Nadeem)
Accounts Officer (Imp)

ALL MINISTRIES/DIVISIONS/DEPARTMENTS
c.c web master

246

No. F. 4(1)-Reg.6/2018-

OFFICE MEMORANDUM

Subject: - GRANT OF INCREASE IN PENSION TO PENSIONERS OF THE FEDERAL GOVERNMENT.

The President has been pleased to sanction an increase @ 10% of net pension with effect from 1st July, 2018 until further order to all civil pensioners of the Federal Government including civilians paid from Defence Estimates as well as retired Armed Forces personnel and Civil Armed Forces Personnel.

2. The 15% increase in pension as allowed vide paras-12(i) of Finance Division's O.M. NO. F. 1(5)-Imp/2011-419, dated 04.07.2011, 7.5% increase in pension as allowed vide para -1 of Finance Division's OM. No 4(1)-Reg.6/2015-697, dated 07.07.2015 and 10% increase in pension as allowed vide para 1 of Finance Division's O.M. No. 4(1)-Reg.6/2016-870 dated 1st July,2016 shall be admissible to the new pensioners who would retire on or after 01.07.2018.

3. The 10% increase in pension as mentioned at para 1 above will also be admissible to the pensioners who would retire on or after 01.07.2018.

4. For the purpose of admissibility of increase in pension sanctioned in this O.M. the term "Net Pension" means "Pension being drawn" minus "Medical Allowance".

5. The increase will also be admissible on family pension granted under the Pension-cum-Gratuity Scheme, 1954, Liberalized Pension Rules, 1977, on pension sanctioned under the Central Civil Services (Extra Ordinary Pension) Rules as well as on the Compassionate Allowance under CSR-353.

6. If the gross pension sanctioned by the Federal Government is shared with any Government in accordance with the rules laid down in part-IV of Appendix III to the Accounts Code, Volume-I, the amount of the increase in pension will be apportioned between the Federal Government and the other Government concerned on proportionate basis.

7. The increase in pension sanctioned in this O.M. will not be admissible on Special Additional Pension allowed in lieu of pre-retirement orderly allowance and monetized value of a driver or an orderly.

8. The benefit of increase in pension sanctioned in this O.M. will also be admissible to those Civil Pensioners of the Federal Government who are residing abroad (other than those residing in India and Bangladesh) who retired on or after 15.08.1947 and are not entitled to, or are not in receipt of pension increase under the British Government's Pension (increase) Acts. The payment will be made at the applicable rate of exchange.

(Muhammad Shahid Ahmed Ch.)
Deputy Secretary (R-III)

ALL MINISTRIES/DIVISIONS/DEPARTMENTS

Cont.....P/2.

Director(Pension), NAF LA

247

No. F. 4(1)-Reg.6/2018-727

Islamabad, the 16th July, 2018.

OFFICE MEMORANDUM

Subject:- GRANT OF INCREASE IN PENSION TO PENSIONERS OF THE FEDERAL GOVERNMENT.

The undersigned is directed to state that in continuation of Finance Division's O.M. No. 4(1)-Reg.6/2018-663 dated 3rd July, 2018 on the above subject it is clarified that since increase in pension @ 10% as allowed w.e.f. 01.7.2017 vide para No. 4 of Finance Division's O.M. No. F. 4(1)-Reg.6/2017-831 dated 3rd July, 2017, has not been discontinued by the Government, therefore, the said increase in pension @ 10% will continue to be admissible to those pensioners who would retire on or after 01.07.2018.

(Muhammad Shahid Ahmed Ch.)
Deputy Secretary (R-III)

ALL MINISTRIES/DIVISIONS/DEPARTMENTS

Cont.....P/2.

Director(Pension)MAPDA

248

F.2(2)R.5/2010

OFFICE MEMORANDUM

SUBJECT: **INCREASE IN RATE OF HOUSE RENT ALLOWANCE**

The undersigned is directed to refer to the para 7 of the Finance Division O.M No. F.1/7/Imp-II/87 dated 1st July 1987 and to state that the President has been pleased to allow the increase in the House Rent Allowance by 50% of the existing amounts of House Rent Allowance admissible to the Federal Government employees, w.e.f 1-7-2018, as under:-

Location	Existing	Revised
In declared Big Cities:	45% of the minimum of Basic Pay Scale 2008	Increase in the amount of House Rent Allowance @ 50% of the existing amounts being drawn.
Other Cities	30 % of the minimum of Basic Pay Scale 2008	Increase in the amount of House Rent Allowance @ 50% of the existing amounts being drawn.

2. All other existing terms and conditions regulating the House Rent Allowance will continue to apply.

(Muhammad Shahid Ahmed Ch.)
Deputy Secretary (R-III)

All Ministries/ Divisions

P.T.O

Director(Pension)WAPDA

249

Government of Pakistan
Finance Division
(Regulations Wing)
****

No. F. 4(1)-Reg.6/2019-838. Islamabad, the 15th July, 2019.

OFFICE MEMORANDUM

Subject: - GRANT OF INCREASE IN PENSION TO PENSIONERS OF THE FEDERAL GOVERNMENT.

The President has been pleased to sanction an increase @ 10% of net pension with effect from 1st July, 2019 until further order to all civil pensioners of the Federal Government including civilians paid from Defence Estimates as well as retired Armed Forces personnel and Civil Armed Forces Personnel.

2. The 15% increase in pension as allowed vide para-12(i) of Finance Division's O.M. NO. F. 1(5)-Imp/2011-419, dated 04.07.2011, 7.5% increase in pension as allowed vide para-1 of Finance Division's OM. No 4(1)-Reg.6/2015-697, dated 07.07.2015, 10% increase in pension as allowed vide para-1 of Finance Division's O.M. No. 4(1)-Reg.6/2016-870, dated 1st July,2016, 10% increase in pension as allowed vide para-1 of Finance Division's O.M. No. 4(1)-Reg.6/2017-831, dated 3rd July, 2017 and 10% increase in pension as allowed vide para-1 of Finance Division's O.M. No. 4(1)-Reg.6/2018-663, dated 3rd July,2018 shall be admissible to the new pensioners who would retire on or after 01.07.2019.

3. The 10% increase in pension as mentioned at para-1 above will also be admissible to the pensioners who would retire on or after 01.07.2019.

4. For the purpose of admissibility of increase in pension sanctioned in this O.M. the term "Net Pension" means "Pension being drawn" minus "Medical Allowance".

5. The increase will also be admissible on family pension granted under the Pension-cum-Gratuity Scheme, 1954, Liberalized Pension Rules, 1977, on pension sanctioned under the Central Civil Services (Extra Ordinary Pension) Rules as well as on the Compassionate Allowance under CSR-353.

6. If the gross pension sanctioned by the Federal Government is shared with any Government in accordance with the rules laid down in part-IV of Appendix III to the Accounts Code, Volume-I, the amount of the increase in pension will be apportioned between the Federal Government and the other Government concerned on proportionate basis.

7. The increase in pension sanctioned in this O.M. will not be admissible on Special Additional Pension allowed in lieu of pre-retirement orderly allowance and monetized value of a driver or an orderly.

8. The benefit of increase in pension sanctioned in this O.M. will also be admissible to those Civil Pensioners of the Federal Government who are residing abroad (other than those residing in India and Bangladesh) who retired on or after 15.08.1947 and are not entitled to, or are not in receipt of pension increase under the British Government's Pension (increase) Acts. The payment will be made at the applicable rate of exchange.

(Muhammad Khalil)
Section Officer (R.6)

ALL MINISTRIES/DIVISIONS/DEPARTMENTS

Cont.....P/2.

250

From pre-page: (2)

Copy also forwarded for information to:

1. President's Secretariat (Public), Islamabad.
2. President's Secretariat (Personal), Islamabad.
3. Prime Minister's Office (Internal), Islamabad.
4. Prime Minister's Office (Public), Islamabad.
5. National Assembly Secretariat, Islamabad.
6. Senate Secretariat, Islamabad.
7. Election Commission of Pakistan, Islamabad.
8. Supreme Court of Pakistan, Islamabad.
9. Federal Shariat Court, Islamabad.
10. AGPR, Islamabad/Lahore/Peshawar/Karachi/Quetta.
11. Pakistan Mint, Lahore.
12. Auditor General of Pakistan, Islamabad.
13. Federal Public Service Commission, F-5/1, Agha Khan Road, Islamabad.
14. Capital Development Authority, Islamabad.
15. Cost Accounts Organization, Islamabad.
16. Military Accountant General, Rawalpindi.
17. Central Directorate of National Savings, Islamabad.
18. Chief Accounts Officer, M/O Foreign Affairs, Islamabad.
19. Financial Adviser and Chief Accounts Officer, Pakistan Railways, Lahore.
20. All Financial Advisers/Deputy Financial Advisors attached to Ministries/Divisions etc.
21. Secretariat Training Institute, Islamabad.
22. Federal Tax Ombudsman's Secretariat, Islamabad.
23. DG, Post Offices, Islamabad.
24. Office of the Chief Commissioner, Islamabad.
25. Secretary, Wafaqi Mohtasib (Ombudsman)'s Secretariat, Islamabad.
26. Pakistan Atomic Energy Commission, Islamabad.
27. All Chief Secretaries/Finance Secretaries of the Government of Punjab/ Sindh/ Khyber Pakhtun Khwa/Baluchistan/Azad Government of Jammu & Kashmir & Gilgit Baltistan.
28. Directorate General of Inspection & Training, Customs & Central Excise, 8th Floor, New Custom House, Karachi.
29. Earthquake Re-construction and Rehabilitation Authority (ERRA), Islamabad.
30. National Accountability Bureau, Islamabad.
31. Intelligence Bureau, Islamabad.
32. Member (Finance), KRL, P.O.Box.No.1384, Islamabad.
33. Controller General of Accounts, Islamabad.
34. Governor, State Bank of Pakistan, Karachi.
35. President, National Bank of Pakistan, Karachi
36. PP&A Dte, GHQ and Joint Staff, Headquarter, Rawalpindi.
37. Web Administrator, Finance Division, Islamabad (for uploading at Finance Division's Website i.e. www.finance.gov.pk).

(Muhammad Khalil)
Section Officer (Reg.6)

S.Akhtar Imam.

PESHAWAR ELECTRIC SUPPLY COMPANY

Wapda House, Shami Road Peshawar - Pakistan
Phone No: +92.91.921997Fax No: +92.91.9212335
Website: www.pesco.gov.pk Email: dghrpesco@gmail.com

(35)

No. 27129-49 HR/PESCO

Dated: 10/10/2018

OFFICE ORDER

In pursuance of the Board of Directors PESCO decision made in its 127th Board Meeting held on 25.09.2018, duly communicated by Company Secretary BoD PESCO vide letter No.979-81/127th BoD dated 05.10.2018, approval of CEO PESCO is hereby conveyed to adopt PEPCO Office Memorandum No.GM(HR)/HRD/A-548/1804-29 dated 30.08.2018 regarding Enhancement in the Upper Limit / Ceiling of Head Office Allowance:

- Board of Directors PEPCO has been pleased to approve enhancement of Upper Limit / Ceiling of Head Office Allowance from Rs.6,000/- to Rs.12,000/- per month with effect from 1st July, 2018.

Director General (HR)
PESCO Peshawar

Copy to:

1. All GMs PESCO HQ.
2. All Chief Engineers PESCO HQ.
3. Company Secretary BoD PESCO.
4. Director General (A&S) PESCO HQ.
5. All Managers PESCO HQ.
6. Finance Director PESCO HQ.
7. Circulation file.

PESHAWAR ELECTRIC SUPPLY COMPANY
Wapda House, Shami Road Peshawar - Pakistan
Phone No: +92.91.921997Fax No. +92.91.9212335
Website: www.pesco.gov.pk Email: dghrpesco@gmail.com

(10)

No. 27228-58 HR/PESCO Dated: ___/10/2018

OFFICE ORDER

In pursuance of the Board of Directors PESCO decision made in its 127th Board Meeting held on 25.09.2018, duly communicated by Company Secretary BoD PESCO vide letter No.979-81/127th BoD dated 05.10.2018, approval of CEO PESCO is hereby conveyed to adopt PEPCO Office Memorandum No. GM(HR)/HRD/A-548/1751-77 dated 28.08.2018:

- Board of Directors PEPCO has been pleased to enhance the Job Crew Allowance for maintenance staff of Grid Stations from Rs. 800/- to Rs. 1200/- per month with immediate effect.

Director General (HR)
PESCO Peshawar

Copy to:

1. All GMs PESCO HQ.
2. All Chief Engineers PESCO HQ.
3. Company Secretary BoD PESCO HQ.
4. Director General (A&S) PESCO HQ.
5. All Managers PESCO HQ.
6. Finance Director PESCO HQ.
7. SE (GSO) PESCO.
8. Circulation file.

PESHAWAR ELECTRIC SUPPLY COMPANY
Wapda House, Shami Road Peshawar - Pakistan
Phone No: +92.91.9211997Fax No. +92.91.9212333
Website: www.pesco.gov.pk Email: dghrpesco@gmail.com

(4c)

No. 26491-27/HR/PESCO Dated: 10/10/2018

OFFICE ORDER

In pursuance of the Board of Directors PESCO decision made in its 127th Board Meeting held on 25.09.2018, duly communicated by Company Secretary BoD PESCO vide letter No.979-81/127th BoD dated 05.10.2018, approval of CEO PESCO is hereby conveyed to adopt PEPCO Office Memorandum No.GM(HR)/HRD/A-548/1631-1656 dated 28.08.2018 regarding Increase in Washing Allowance and Liveries Allowance:

- Board of Directors PEPCO has been pleased to approve increases in Washing Allowance and Liveries Allowance at a uniform rate of Rs.1000/- (Rupees one thousand) per month for entitled staff.

Director General (HR)
PESCO Peshawar

Copy to:

1. All GMs PESCO HQ.
2. All Chief Engineers PESCO HQ.
3. Company Secretary BoD PESCO HQ.
4. Director General (A&S) PESCO HQ.
5. All Managers PESCO HQ.
6. Finance Director PESCO HQ.
7. All SEs (Operation) / (GSO) PESCO.
8. PDs (Construction) / (GSC) PESCO.
9. RM (M&T) PESCO.
10. XEN (Civil) / (RTC) PESCO.
11. Circulation file.

PESHAWAR ELECTRIC SUPPLY COMPANY

Wapda House, Shami Road Peshawar - Pakistan
Phone No: +92.91.921997Fax No: +92.91.9212335
Website: www.pesco.gov.pk Email: dghrpesco@gmail.com

(35)

No. 27219-37 HR/PESCO

Dated: 10/10/2018

OFFICE ORDER

In pursuance of the Board of Directors PESCO decision made in its 127th Board Meeting held on 25.09.2018, duly communicated by Company Secretary BoD PESCO vide letter No.979-81/127th BoD dated 05.10.2018, approval of CEO PESCO is hereby conveyed to adopt PEPCO Office Memorandum No. GM(HR)/HRD/A-548/1657-1682 dated 28.08.2018:

- Board of Directors PEPCO has been pleased to approve enhancement of Danger Allowance to the tune of Rs. 3000/- p.m for those ALMs who are in receipt of Rs. 400/- p.m.
- The above allowance will be admissible to the incumbents, who actually and physically work in field subject to certificate from concerned SDO / XEN every month in this respect.

Director General (HR)
PESCO Peshawar

Copy to:

1. All GMs PESCO HQ.
2. All Chief Engineers PESCO HQ.
3. Company Secretary BoD PESCO HQ.
4. Director General (A&S) PESCO HQ.
6. Finance Director PESCO HQ.
7. All SEs (Operation) / (GSO) PESCO.
8. Circulation file.

PESHAWAR ELECTRIC SUPPLY COMPANY

CAREER OPPORTUNITIES

PESCO is Public Limited Company mandated under its licenseto provide electricity to its valuable customers. Applications are invited for recruitment of suitable candidates to fill the following positions of BPS-17 on one year contract basis. All quotas such as provincial, FATA/GB, AJK, Women & Minority etc. will be observed as per Government Policy / where applicable.

S. No	Designation	BPS	Required Qualification and Experience	Total No. of posts	Quota's		Age limit
1	SDO (Operation) / Jr. Engineers	17	BSc. Electrical Engineering (Preferably in Power Engineering) in 1st Division (at least 60% Marks / 2.5 CGPA) or equivalent degree from HEC recognized university with Pakistan Engineering Council (PEC) Registration Certificate	70	Open Merit Punjab Open Punjab (Women) Punjab Minority Sindh Rural Open Sindh Rural Women Sindh Urban Open Sindh Urban Women KPK Open KPK Women Baluchistan Open NA/FATA AJK	5 30 4 2 7 1 5 1 7 1 4 2 1	21 to 33 years
3	Revenue Officer	17	MBA, M.Sc in Mathematics / Statistics / Computer Science, M.Com, B.Sc Engineering, MA Economics from any HEC recognized university and with Pakistan Engineering Council (PEC) Registration Certificate in case of B.Sc Engineers	15	Open Merit Punjab Open Punjab Women Sindh Rural Open Sindh Urban Open KPK Open Baluchistan Open NA/FATA	1 6 1 2 1 2 1 1	21 to 33 years

Terms and Conditions

1. General age relaxation has already been included in the age mentioned against each category. No further age relaxation is allowed in the prescribed age limit except for candidates belonging to scheduled castes, Buddhists, FATA, GB and AJK are allowed 3 years relaxation in upper age limit.
2. Only qualified and eligible candidates will be allowed to appear in Written Test / Interview.Graduate Engineers who are serving in PESCO as Upper Technical Subordinates (UTS) are also eligible to apply for the post of SDO against their prescribed quota i.e. 5%.
3. The selected candidates will be required to perform duty anywhere in KPK under the jurisdiction of PESCO as per requirement of the Company.
4. Applications submitted by hand or through post to PESCO will not be entertained / processed. All applicants must apply on the STEPNEX Online Application Portal www.stepnex.org.pk or through paper-based application available on STEPNEX website www.stepnex.org.pk on the address P.O. Box 263, G.P.O Peshawar Cantt, Peshawar.
5. Original documents along with one set of attested photocopies must be presented by the candidate at the time of interview.
6. Candidate may contact STEPNEX for any query regarding written test, display of provisional and final list of candidates, Roll number slips, test centers, results etc. on the email info@stepnexs.com.
7. Candidates awaiting their result are not eligible to apply. Only those candidates who have completed their requisite Degree are eligible to apply. Candidates to whom final transcript has not been issued shall not be considered.Pakistan Engineering Council (PEC) Registration Certificate is essential for Graduate Engineers.
8. Candidate applying only on the STEPNEX Online Application Portal www.stepnex.org.pk or through paper-based application available on STEPNEX website www.stepnex.org.pk on the address P.O. Box 263, G.P.O Peshawar Cantt, Peshawar will be considered for short listing.
9. Serving candidates who are Government Servants or have completed 2 years continuous Government service on the closing date of applications are advised to apply through proper channel. 10 years age relaxation up to the age of 55 is allowed in this case. Candidates will have to provide departmental No Objection Certificate clearly mentioning date of appointment and nature of employment i.e. Regular, Contract etc. at the time of interview.
10. PESCO reserves the right to cancel the recruitment process at any stage.
11. No TA/DA will be paid for test / interview.
12. Dismissed / screened out employees of any organization or having criminal record are not eligible for employment in PESCO.
13. Concealment or mis-representation of facts at any stage will lead to disqualification of a candidate.
14. Any litigation pertaining to recruitment process will be dealt by the STEPNEX at its own without any liability whatsoever for PESCO.

How to Apply

i. STEPNEX Online Application Portal is available on the address www.stepnex.org.pk. Paper-based application is available on STEPNEX website www.stepnex.org.pk for download.

ii. **50% of the test fee i.e. Rs.145/- will be borne by PESCO. Hence the candidates are required to deposit only 50% of the test fee i.e. Rs.145/-.**Candidate shall submit applications on the STEPNEX Online Application Portal or through Paper-based application available on STEPNEX website www.stepnex.org.pk on the addressP.O. Box 263, G.P.O Peshawar Cantt, Peshawar,duly filled in along with test fee of **Rs.145/-** in favor of STEPNEX,**within 15 days of publication of this advertisement.**

iii. **Separate Fee will be charged in case of applying for more than one post. Separate application on the STEPNEX Online Application Portal** or through paper-based application available on STEPNEX website www.stepnex.org.pk **is required to be submitted for each post.**

iv. No application shall be entertained at PESCO HQ, therefore, applicants are advised to apply directly to STEPNEX on the STEPNEX **Online Application Portal** or through paper-based application available on STEPNEX website www.stepnex.org.pkon the address P.O. Box 263, G.P.O Peshawar Cantt, Peshawar.

v. Test fee shall be paid on prescribed bank challan placed on the STEPNEX Online Application Portal for download from the address www.stepnex.org.pk. Deposit Fee is not refundable and non-transferable.

vi. Applications submitted by hand or through post to PESCO will not be entertained / processed. All applicants must apply on the STEPNEX Online Application Portal www.stepnex.org.pk or through paper-based application available on STEPNEX website www.stepnex.org.pk on the address P.O. Box 263, G.P.O Peshawar Cantt, Peshawar.

vii. Roll No. Slip containing the information regarding test center, timings and test date shall be separately sent directly to candidates by STEPNEXat least 1 week before the test on the emails provided by the candidates on the STEPNEX Online Application Portal or through post for paper-based applications on the address provided by the candidate on his / her paper-based application.

viii. Candidates can also download their Roll No. Slip from the STEPNEX Online Application Portal.

ix. Only those candidates who have completed their requisite degree / certificates are eligible to apply.

x. Candidates to whom final transcript has not been issued or result awaited shall not be considered.

xi. For further information please contact STEPNEX on the email info@stepnexs.com.

Ansar Hussain
Addl: DIRECTOR GENERAL(HR)
PESCO PESHAWAR
091-9213121

PESHAWAR ELECTRIC SUPPLY COMPANY

CAREER OPPORTUNITIES

PESCO is a Public Limited Company mandated under its License to provide electricity to its valuable customers. Applications are invited for recruitment of suitable candidates having domicile / residing in Districts under the jurisdiction of PESCO to fill the following positions on one year contract basis. All the quotas such as Women, Disabledand Minority etc. will be observed as per Govt. policy.

S. No	Position	BPS	Required Qualification and Experience	No. of positions	Allocation of posts (Direct Quota)	20% Employees Children Quota	Age limit
1	Line Superintendent Grade-II	14	Matric with 3 years Diploma (DAE) in Electrical / Electronics Technology from any GovernmentRecognized Polytechnic Institute in 1st Division	156	Open Merit 98 Women 16 Disabled 03 Minority 08	31	18 to 30 years
2	Meter Reader	9	FA / FSc with minimum 2nd Division	220	Open Merit 161 Disabled 04 Minority 11	44	18 to 30 years
3	Bill Distributor	7	Matriculation	530	Open Merit 387 Disabled 11 Minority 26	106	18 to 30 years
4	ALM	5/7	Matriculation (minimum) **PHYSICAL PARAMETERS** **Age**18-30 Years (including General Age Relaxation) **Medical Category**"A" **Height**Minimum 5 Ft. 4 Inches **Chest**Minimum 32 Inches **Weight**As per Body Mass Index Chart (BMI) + 5% relaxation on upper side	2605	Open Merit 1954 Minority 130	521	18 to 30 years
Total				3511	2809	702	

Applicants are advised to read the following instructions carefully before applying on the STEPNEX Online Application Portal www.stepnex.org.pk or through paper-based application available on STEPNEX website www.stepnex.org.pk on the address P.O. Box 263, G.P.O Peshawar Cantt, Peshawar:

Terms and Conditions

1. General age relaxation has already been included in the age mentioned against each category. No further age relaxation is allowed in the prescribed age limit except for candidates belonging to scheduled castes and Buddhists are allowed 3 years relaxation and for Disabled person 10 years relaxation in upper age limit.
2. Only qualified and eligible candidate will be allowed to appear in Written Test / Skill Test / Physical Test / Interview. Only shortlisted candidates falling within merit as per the provisions of applicable Recruitment Policy will be called for Written Test / Skill Test / Physical Test / Interview.
3. Selected candidate can be posted anywhere under the jurisdiction of PESCO as per requirement of the Company.
4. The recruitment of ALM (as defined in the PEPCO Office Order No.3569-91/GM (HR)/PEPCO/D(A) dated 05.04.2019) will initially involve screening of Physical Parameters, those fulfilling Physical Parameters will undergo Skill Test, those who qualify Skill Test by securing minimum 50% marks will be called for Physical Test and finally those who qualify the Physical Test by securing minimum 50% marks will be called for Interview.
5. The ALMs at Serial No.4 will be initially recruited / appointed in BPS-05 on contract and will be considered for BPS-07 after 2 years satisfactory performance.
6. Applications submitted by hand or through post to PESCO will not be entertained / processed. All applicants must apply directly to STEPNEX on the STEPNEX Online Application Portal www.stepnex.org.pk or through paper-based application available on STEPNEX website www.stepnex.org.pk on the address P.O. Box 263, G.P.O Peshawar Cantt, Peshawar.
7. Original documents along with one set of attested photocopies must be presented by the candidate at the time of interview.
8. Candidate may contact STEPNEX for any query regarding written test, display of provisional and final list of candidates, Roll number slips, test centers, results etc. on the email info@stepnexs.com.

9. Candidate applying only on the STEPNEX Online Application Portal www.stepnex.org.pk or through paper-based application available on STEPNEX website www.stepnex.org.pk on the address P.O. Box 263, G.P.O Peshawar Cantt, Peshawar will be considered for short listing.
10. Serving candidates who are Government Servants or have completed 2 years continuous Government service on the closing date of applications are advised to apply through proper channel.10 years age relaxation up to the age of 55 is allowed in this case. Candidates will have to provide departmental No Objection Certificate clearly mentioning date of appointment and nature of employment i.e. Regular, Contract etc. at the time of interview.
11. PESCO reserves the right to cancel the recruitment process at any stage.
12. No TA/DA will be paid for Written Test / Skill Test / Physical Test / Interview.
13. Dismissed / screened out employees of any organization or having criminal record are not eligible for employment in PESCO.
14. Concealment or mis-representation of facts at any stage will lead to disqualification of a candidate.
15. Candidates applying against Disabled Quota must provide Disability Certificate from Assessment Board declaring him / her fit for the job applied for from City / District / Provincial Council for Rehabilitation of Disabled Person.
16. Children of those PESCO employees who have been declared incapacitated for further service by WAPDA medical board, died after retirement, retired and serving are eligible to apply.
17. Any litigation pertaining to recruitment process will be dealt by STEPNEX at its own without any liability whatsoever for PESCO.

How to Apply

i. STEPNEX Online Application Portal is available on the address www.stepnex.org.pk. Paper-based application is available on STEPNEX website www.stepnex.org.pk for download.
ii. **50% of the test fee i.e. Rs.77/- will be borne by PESCO. Hence the candidates are required to deposit only 50% of the test fee i.e. Rs.76/-.** Candidate shall submit applications on the STEPNEX Online Application Portal or through paper-based application available on STEPNEX website www.stepnex.org.pk on the address P.O. Box 263, G.P.O Peshawar Cantt, Peshawar, duly filled in along with test fee of **Rs.76/-** in favor of STEPNEX, **within 15 days of publication of this advertisement.**
iii. **Separate Fee will be charged in case of applying for more than one post. Separate application on the STEPNEX Online Application Portal is required to be submitted for each post.**
iv. No application shall be entertained at PESCO HQ, therefore, applicants are advised to apply directly to STEPNEX on the STEPNEX **Online Application Portal** or through paper-based application available on STEPNEX website www.stepnex.org.pk on the address P.O. Box 263, G.P.O Peshawar Cantt, Peshawar.
v. Test fee shall be paid on prescribed bank challan placed on the STEPNEX Online Application Portal for download from the address www.stepnex.org.pk. Deposit Fee is not refundable and non-transferable.
vi. Applications submitted by hand or through post to PESCO will not be entertained / processed. All applicants must apply on the STEPNEX Online Application Portal www.stepnex.org.pk or through paper-based application available on STEPNEX website www.stepnex.org.pk on the address P.O. Box 263, G.P.O Peshawar Cantt, Peshawar.
vii. Roll No. Slip containing the information regarding test center, timings and test date shall be separately sent directly to candidates by STEPNEX at least 1 week before the test on the emails provided by the candidates on the STEPNEX Online Application Portal or through post for paper-based application on the address provided by the candidate on his/her paper-based application.
viii. Candidates can also download their Roll No. Slip from the STEPNEX Online Application Portal.
ix. Only those candidates who have completed their requisite degree / certificates are eligible to apply. Candidates to whom final transcript has not been issued or result awaited shall not be considered.
x. For further information please contact STEPNEX on the email info@stepnexs.com.

Instructions on How to Applyfor applicants under 20% Employee Children Quota

1. STEPNEX Online Application Portal is available on the address www.stepnex.org.pk. Paper-based application is available on STEPNEX website www.stepnex.org.pk for download.
2. **50% of the test fee i.e. Rs.77/- will be borne by PESCO. Hence the candidates are required to deposit only 50% of the test fee i.e. Rs.76/-.** Candidate shall submit applications on the STEPNEX Online Application Portal or through paper-based application available on STEPNEX website www.stepnex.org.pk on the address P.O. Box 263, G.P.O Peshawar Cantt, Peshawar, duly filled in along with test fee of **Rs.76/-** in favor of STEPNEX, **within 15 days of publication of this advertisement.**
3. Only PESCO Employee's Children applying on the STEPNEX Online Application Portal available on the address www.stepnex.org.pk or through paper-based application available on STEPNEX website www.stepnex.org.pk on the address P.O. Box 263, G.P.O Peshawar Cantt, Peshawar will be considered for induction / short-listing under 20% Employee's Children Quota.
4. Children of those PESCO employees have been declared incapacitated for further service by WAPDA medical board, who died after retirement, retired and serving are eligible to apply.

5. Candidates applying under 20% employee Children Quota must ensure the following:
   a. To provide all relevant documents mentioned in the STEPNEX Online Application Portal or through paper-based application available on STEPNEX website www.stepnex.org.pk on the address P.O. Box 263, G.P.O Peshawar Cantt, Peshawar along with Employee's Children Proforma duly signed by the concerned XEN/SE along with CNIC of father / mother at the time of interview.
   b. They must also provide an Affidavit (on Non-judicial Stamp paper) to the effect that none of their brothers / sisters or Widow Mother is employed in WAPDA / PESCO against Employees Children Quota and that he/she is the real son / daughter of deceased / retired / serving employee. **Applications of employee's children whose proforma have not been signed by the concerned XEN / SE will not be entertained.**
   c. Candidate applying for more than one post under 20% employee children quota should submit separate application for each post on the STEPNEX Online Application Portal or through paper-based application available on STEPNEX website www.stepnex.org.pk on the address P.O. Box 263, G.P.O Peshawar Cantt, Peshawar.
   d. **Those applicants who have applied under Direct / 20% Employee Children Quota against any of above referred posts in the past to any PESCO office should submit fresh applicationon** the STEPNEX Online Application Portal or through paper-based application available on STEPNEX website www.stepnex.org.pk on the address P.O. Box 263, G.P.O Peshawar Cantt, Peshawar.
   e. **Applications submitted in the past to any of PESCO office under Direct / 20% Employees Children Quota posts shall not be considered as valid after publication of this advertisement.**
6. Candidates applying for the posts under 20% Employee Children Quota should apply directly to STEPNEX on the STEPNEX Online Application Portal or through paper-based application available on STEPNEX website www.stepnex.org.pk on the address P.O. Box 263, G.P.O Peshawar Cantt, Peshawar.

Ansar Hussain
Addl: DIRECTOR GENERAL(HR)
PESCO PESHAWAR
091-9213121

PESHAWAR ELECTRIC SUPPLY COMPANY LIMITED

Phone# 091-9212230
Fax # 091-9212024

Office of the Chief Executive
Wapda House, Peshawar

No. 30970-88

Date: 20/11/2018

OFFICE ORDER

In pursuance to Clause 6 of the Health Care Policy issued vide MD PEPCO office Memo No. GM(HR)/HRD/A-647/14271-14300 dated 15.12.2017, adopted by PESCO BOD in its 123th meeting dated 21.03.2018 and 124th BOD meeting dated 21.05.2018 and conveyed vide Company Secretary Letter No. 416-18/123 BOD 13.04.2018 and No. 572-74/124th BOD dated 01.06.2018, the option for 15% Cash Medical Allowance (CMA) of the running basic pay will be allowed only to the PESCO employees posted in stations/offices beyond 30KM radius of the following Wapda Hospital/Dispensaries.

1. PESCO Hospital Peshawar.
2. Wapda Dispensary D.I.Khan
3. Wapda Dispensary Dargai
4. Wapda Hospital Tarbela (Left Bank)
5. Wapda Hospital Tarbela (Right Bank)

The stations/office will be taken as Divisional Office and the concerned DDO will be responsible to ensure change of option for 15% CMA only to the employees posted beyond 30KM radius of Wapda Hospitals/Dispansaries. List of all DDOs falling within and beyond 30KM radius attached at Annex-A&B.

Note: Approval of CEO PESCO on Noting para 116 of the file.

Director General (HR)
PESCO H/Q Peshawar

Copy to:

1. Company Secretary PESCO Peshawar.
2. Finance Director PESCO Peshawar
3. All SEs (Operation) PESCO
4. SE (GSO) PESCO Pesh.
5. PD (GSC/CO) PESCO.
6. Manager (M&T) PESCO.
7. MS Wapda Hospital Peshawar.
8. SO to CEO PESCO Peshawar
9. Addl. DG (HR) PESCO H/Q.
10. Circulation File

Swabi circle.

PESHAWAR ELECTRIC SUPPLY COMPANY

"A"

Financial Impact of Cash Medical Allowance Allowed @ 15%

As on 30.06.2018

S.No.	NAME OF OFFICE	Net Basic Pay	Cash Medical Allowance @15% As Per New Policy	Actual Cash Medical Allowance (2017-18)	Net Financial Impact of CMA
1	DMO Kohat City	60,340,784	10,251,118	3,861,734	6,389,384
2	DMO Kohat Rural	60,069,957	9,010,494	2,767,433	6,243,061
3	DMO K.H.S. Hangu	41,057,036	6,163,055	2,117,731	4,045,324
4	DMO Charsada	199,498,735	29,924,810	9,062,608	20,862,202
5	DMO Nowshehra - I	114,512,943	17,176,941	5,495,497	11,681,444
6	DMO Nowshehra - II	182,779,764	27,416,965	8,605,744	18,811,221
7	DMO Mardan -I	134,235,399	20,135,310	6,111,403	14,023,907
8	DMO Mardan - II	151,741,622	22,761,243	6,724,955	16,036,288
9	DMO Swat - I	148,150,210	22,222,532	6,379,326	15,843,206
10	DMO Swat-2	56,661,455	8,499,218	2,982,364	5,516,854
11	DMO Timergara	135,605,071	20,340,761	6,395,891	13,944,870
12	DMO Dir	50,675,060	7,601,260	2,451,145	5,150,115
13	DMO Buner	32,805,173	4,920,776	1,513,541	3,407,235
14	DMO Abbottabad City.	146,109,966	21,916,495	5,879,445	16,037,050
15	DMO Abbotabadt (J.Abad)	83,893,397	12,584,010	3,990,954	8,593,056
16	DMO Mansehra City-1.	97,554,602	14,633,190	5,212,075	9,421,115
17	DMO Mansehra City-2	42,123,030	6,318,455	2,180,335	4,138,120
18	DMO Mansehra Rural.	74,550,125	11,182,519	3,768,280	7,414,239
19	DMO Haripur City.	74,309,460	11,155,419	3,652,713	7,502,706
20	DMO Haripur Rural.	64,095,406	9,614,311	2,449,772	7,164,539
21	DMO Bannu -1	143,847,810	21,547,172	6,522,302	15,024,870
22	DMO Bannu -2	113,402,713	17,010,407	6,132,029	11,878,378
23	DMO Lakki	143,620,415	21,543,062	6,418,806	15,124,256
24	DMO Tank	83,858,456	12,578,768	2,899,967	9,678,801
25	DMO Karak	62,143,234	9,321,485	3,290,166	6,031,319
26	AMCS Kohat City	9,050,225	1,357,534	80,260	1,277,274
27	AMCS Kohat Rural	4,096,457	614,469	375,524	238,945
28	AMCS K.H.S. Hangu	5,662,925	847,939	48,000	799,939
29	AMCS Charsada	19,786,551	2,964,833	152,128	2,812,705
30	AMCS Nowshehra - I	7,239,567	1,085,935	103,500	982,435
31	AMCS Nowshehra - II	8,160,437	1,227,066	200,000	1,027,066
32	AMCS Mardan - I	18,493,788	2,774,068	64,560	2,709,508
33	AMCS Mardan - II	14,295,146	2,144,272	107,275	2,036,997
34	AMCS Swat - I	9,736,606	1,460,491	42,000	1,418,491
35	AMCS Swat - II	10,160,039	1,524,006	220,297	1,303,709
36	AMCS Timergara	7,051,488	1,057,723	72,173	985,550
37	AMCS Dir	5,523,417	828,513	30,774	797,739
38	AMCS Buner	3,319,589	497,938	42,000	455,938
39	AMCS Abbotabad	8,332,727	1,249,009	276,387	973,622
40	AMCS Abbotabad Rural	7,244,977	1,086,747	146,387	941,360
41	AMCS Mansehra City-1	5,593,237	838,986	178,500	660,486
42	AMCS Mansehra City-2	2,435,362	365,304	81,421	283,883
43	AMCS Mansehra Rural.	5,110,721	767,508	187,064	580,444
44	AMCS Haripur City.	5,562,516	834,377	-	834,377
45	AMCS Haripur Rural.	9,945,619	1,491,843	40,500	1,451,343
46	AMCS Bannu -1	13,499,757	2,024,964	58,446	1,966,518
47	AMCS Bannu -2	10,804,035	1,620,605	54,000	1,566,605
48	AMCS Lakki	9,608,308	1,441,246	227,467	1,213,779
49	AMCS Tank	5,964,794	894,719	216,000	678,719
50	AMCS KARAK	6,271,218	940,683	57,000	883,683
51	Regional Store, N.S.R.	79,810,346	11,941,562	2,743,538	9,198,017
52	Dy.Manager SS & TL - Mardan	170,641,030	25,596,245	9,045,329	16,550,916
53	Dy.Manager SS&TL Abbottabad	75,674,644	11,351,227	4,052,400	7,298,827
54	Dy.Manager SS & TL - Bannu	107,399,725	16,109,969	5,606,918	10,503,041
55	XEN, P.C. Polo	-	-	-	-
	Total	3,151,802,881	472,770,432	140,377,001	332,393,431
	Contingency				25,000,000
	Grand Total	3,151,802,881	472,770,432	140,377,001	357,393,431

Cash Medical Allowance to P.D(C&O/GSC), M & T, and P&I will be allowed except Peshawar, Dargai, Swabi, D-I-Khan etc.

"B"

PESHAWAR ELECTRIC SUPPLY COMPANY

Financial Impact of Cash Medical Allowance @ 15% Not Considered

As on 30.06.2018

S.No.	NAME OF OFFICE	Net Basic Pay	Cash Medical Allowance @ 15% As Per New Policy	Actual Cash Medical Allowance (2017-18)	Net Financial Impact of CMA
1	DMO City(R) Peshawar.	119,038,756	17,855,813	5,236,354	12,619,459
2	DMO City (U) Peshawar.	130,128,053	19,519,208	5,202,792	14,316,416
3	DMO Cantt(R) Peshawar.	144,912,059	21,736,809	5,459,243	16,277,566
4	DMO Cantt (U) Peshawar.	126,185,489	18,927,823	4,885,195	14,042,628
5	DMO Khyber	131,159,319	19,673,898	5,968,028	13,705,870
6	DMO Takht Bhai.	89,895,879	13,484,382	4,377,127	9,107,255
7	DMO Swabi - I	50,643,864	7,596,580	2,354,974	5,241,606
8	DMO Swabi - II	63,771,845	9,565,777	3,057,693	6,508,084
9	DMO Razar	62,688,470	9,403,271	3,054,962	6,348,309
10	DMO Topi	34,239,747	5,135,962	1,289,291	3,846,671
11	DMO Dargai	140,714,936	21,107,240	6,209,066	14,898,174
12	DMO Shabqadar	81,669,705	12,250,456	3,780,477	8,469,979
13	DMO D. I. Khan (City)	175,354,721	26,303,208	5,946,073	20,357,135
14	DMO D. I. Khan(Rural)	124,489,741	18,673,461	4,318,376	14,355,085
15	A.M (CS) City Rural Peshawar.	16,700,036	2,505,005	113,132	2,391,873
16	AMCS Urban City Peshawar.	17,699,194	2,654,879	494,322	2,160,557
17	AMCS Rural Cantt.Peshawar.	14,247,997	2,137,200	75,531	2,061,669
18	AMCS Urban Cantt.Peshawar.	13,876,617	2,081,493	88,338	1,993,155
19	AMCS Khyber	13,889,202	2,083,380	106,500	1,976,880
20	AMCS Takht Bhai.	5,060,762	759,114	33,000	726,114
21	AMCS Swabi - I	6,209,538	931,431	32,902	898,529
22	AMCS Swabi - II	9,793,960	1,469,094	39,871	1,429,223
23	AMCS Razar	4,401,189	660,178	41,500	618,678
24	AMCS Topi	2,297,500	344,625	18,000	326,625
25	AMCS Dargai	7,354,726	1,103,209	89,500	1,013,709
26	AMCS Shabqadar	9,241,745	1,386,262	96,000	1,290,262
27	AMCS D.I.Khan (City)	10,501,611	1,575,242	108,050	1,467,192
28	AMCS D.I.Khan(Rural)	8,642,818	1,296,423	126,000	1,170,423
29	Dy.Manager SS & TL.- Pesh.	166,395,197	24,959,280	7,968,364	16,990,916
30	Dy.Manager P & I.- Pesh.	25,993,464	3,899,020	566,275	3,332,745
31	M & T.- Peshawar.	56,784,174	8,517,626	1,768,106	6,749,520
32	Dy.Manager Civil	17,908,777	2,686,317	440,612	2,245,705
33	P.D. (C&O) - Pesh.	157,004,428	23,550,664	6,046,344	17,504,320
34	Deputy Chief Auditor	63,649,907	9,547,486	705,750	8,841,736
35	P.D. GSC	146,890,258	22,033,539	4,257,340	17,776,199
36	D.M. R.T.C. Gharsadu	17,536,202	2,630,430	591,528	2,038,902
37	P.M.U Peshawar.				
38	C.E / Finance Director	281,422,578	42,213,387	4,679,493	37,533,894
	G.TOTAL	2,548,394,464	382,259,170	89,605,109	292,654,061

PESHAWAR ELECTRIC SUPPLY COMPANY

Phone No. + 92.91.9210226
Fax No. + 92.91.9223136

Office of the
Company Secretary PESCO
Wapda House, Shami Road,
Peshawar

No. 572-76 / 124th BoD

Dated: 01.06.2018

Director General (HR)
PESCO HQ

Finance Director
PESCO HQ

Subject: - 124th PESCO BOARD DECISIONS

PESCO Board of Directors in its 124th Board meeting held on 21-05-2018 made the following decisions in the light of HR Sub Committee recommendations dated 02.05.2018.

Compensation package for Officers posted on Promotion out of Parent Companies

Compensation Package for officers posted on promotion out of parent Company already approved by the Board was discussed in the HR Sub Committee meeting held on 02.05.2018 in the light of DG (HR) letter No. 13387-88 dated 27.04.2018. HR Committee after discussion recommended to the Board for adoption of compensation package as per PEPCO policy conveyed by General Manager (HR) PEPCO.

Board after discussion approved to adopt/follow PEPCO's policy as recommended by the HR Sub Committee.

Health Care Policy

Health Care Policy was approved by the Board subject to clarity on point 1, 3 & 15 in 123rd BoD meeting. It was brought into the notice of HR Sub Committee that the Health Care Policy approved by the Board is subject to clarity of point 1,3 & 15 which creates ambiguity in its implementation.

HR Sub Committee after discussion recommended to the Board that the Health Care Policy may be approved and point 1, 3 & 15 be clarified from the Office concerned by PESCO Management. Financial Implication submitted by the Finance Director were also shared with the Board.

Board after discussion approved recommendation of the HR Sub Committee regarding Health Care Policy.

Please take further necessary action in the light of Board decisions and implementation position may be forwarded to this office within a week positively.

Minutes of the HR Sub Committee meeting held on 02.05.2018 duly approved by the Board are enclosed for ready reference.

Company Secretary
PESCO HQ

Copy to:-

1. SO to CEO PESCO for information.

PESHAWAR ELECTRIC SUPPLY COMPANY

O/O CHIEF EXECUTIVE OFFICER PESCO PESHAWAR
PHONE # (091) 9212230 FAX # 9212024

NO. /ADDL;DG (TRG&DEV)/ 17401-36 Dated 13/6/2018

All C.E's/Directors,
PESCO HQ Peshawar.

All DGs/ Addl; DG's,
PESCO HQ Peshawar.

Company Secretary,
PESCO HQ Pesh.

Superintending Engineer (Opr),
PESCO Pesh/Mardan/Khyber/
Swat/Swabi/Bannu/Hazara Circle I&II

Manager Tech: Services,
(M&T) PESCO Peshawar.

Addl; S.E (Trg),
RTC PESCO Charsadda.

MS WAPDA Hospital,
WAPDA House Peshawar.

GM (Technical)
PESCO HQ Peshawar.

Finance Director,
PESCO HQ Peshawar.

P.D (C&O/GSC),
PESCO Peshawar.

All Managers,
PESCO HQ Peshawar.

S.E (GSO) Circle,
PESCO Peshawar.

Xen (PMC/Civil),
PESCO HQ Peshawar.

Head Mistress,
PESCO Girls High School
Peshawar.

Subject: - HEALTH CARE POLICY.

A copy of General Manager (HR) PEPCO WAPDA House Lahore, letter No. GM(HR)/HRD/A-647/14271-14300 Dt. 15-12-2017, regarding Health Care Policy approved by PESCO Board Of Directos in its 124th Board meeting held on Dt. 21-05-2018 is sent herewith for your information & further implementation at your end please.

This issues with the approval of (CEO) PESCO Peshawar.

ADDL;DG(TRG&DEV)
PESCO Peshawar

DA/As Above

Copy to: -

1. DG (MS) WAPDA House Lahore for information please.
2. Cashier (CEO) Office PESCO HQ Peshawar.
3. Provincial Chariman (CBA) Union.
4. Circulation File.

For information alongwith copy of Health Care Policy.

Company Secretary
PESCO
Diary No. 212

20/6

266

Pakistan Electric Power Company (Pvt.) Limited
Office of the General Manager (Human Resources),
732-WAPDA House, Shahrah-i-Quaid-i-Azam, Lahore
Tel: (042) 99202682 & 99202211/2732 Fax: (042) 99202402

No. GM(HR)/HRD/A-647/ 14271-14300
Date: December 15, 2017

OFFICE MEMORANDUM

SUBJECT: **HEALTHCARE POLICY.**

BoD PEPCO, in its 67th Meeting held on 07.10.2017, has been pleased to approve Healthcare Policy as under:

1. WAPDA will create Medical Healthcare Company as a service provider. The Board of Directors of the Company should have at least four members out of seven from PEPCO/DISCOs/ NTDC/GENCOs to bring all stakeholders on board for improvement of Healthcare Facility.

2. The cost of medical to be paid by each Company to WAPDA will be calculated on prorata basis consisting of two components; (i) fixed cost, including establishment and O&M cost and (ii) drug and dressing Cost to be calculated on the basis of total number of registered employees.

3. A draft MOU will be prepared in consultation with WAPDA Medical Services and PEPCO, on behalf of all corporate entities, to have uniform Healthcare facility across all corporate entities. The draft MOU will be put up to BOD PEPCO for approval.

4. Medical facilities for employees of Corporate Entities through present setup of WAPDA Hospitals and Dispensaries be continued, subject to improvement in the quality and standard of services and facilities at par with CMH or reputable private hospitals.

5. Companies are allowed to take on their Panel one or more Hospitals for general and specialized treatment. In big cities, patients will be referred to panel hospitals through Medical Officer/Medical Superintendent/DG M.S of WAPDA Hospital. In small cities, the patients will be referred to Panel Hospitals through Drawing & Disbursing Officer (DDO) of the area. List of such small cities will be approved by Admn. & HR Directors of the concerned companies.

Contd.../P.2

ADG (DDO)
MS Hospitals

6. In order to cover employees serving at far-flung areas where WAPDA Medical facility is not available Cash Medical Allowance as under in light of Federal Government Office Memorandum No.F.1(1)Imp/2010-622 dated 05.07.2010 will be given:-

(a) Cash Medical Allowance @ 15% of the running basic pay to the employees in BPS-16 and above of PEPCO/ Corporate Entities, if they opt for the same.

(b) Cash Medical Allowance @ 15% of the running basic pay to the employees in BPS-1 to 15 of PEPCO/Corporate Entities, if they opt for the same. The cash medical allowance should not be less than the existing rate of Rs. 1500/- per month,

Note: The employees who opt for cash medical allowance will be entitled for consultancy and indoor facilities available at WAPDA Hospitals / Dispensaries.

7. **Eligibility for Medical Facilities.**

For all employees, who opt for medical facility except on Daily Wages. For Contract Employees, relevant clause of contract should apply.

8. **Extent of Medical Facilities**

All kinds of healthcare facilities are covered except cosmetic and dermatology requirements.

9. **Removal of Bottlenecks in Existing Reimbursement Procedure / Rates.**

a) **Reimbursements on outdoor treatment.**

The claims of the patients referred to Private hospitals by WAPDA Medical Services be re-imbursed twice the rates of CMH for similar treatment. In case of chronic diseases, actual expenditures incurred in private hospitals be reimbursed. The nature of case to be a chronic one be determined by the WAPDA Medical Board.

Contd.../P.3

b) **Reimbursement Limits**
Limit of reimbursement of medicine be enhanced as under:-

(i) Where the Medical Facility Exists.
Upto 01 month running basic pay of the employee.

(ii) Where The Medical Facility Does Not Exist.
Upto 03 months running basic pay in a financial year.

Note: There will be no restriction on reimbursement for treatment of chronic diseases as determined by the board.

c) **Advance for Non-Fatal Accidents.**

In case of non fatal accident, if medical facility of specific treatment is not available in WAPDA/Panel hospital, the concerned Drawing & Disbursing Officer (DDO) should arrange advance payment immediately for treatment at Private Hospital / Non-panel hospital to be adjusted later on with the approval of competent authority.

d) **Maternity Charges**

The revised maternity charges are as under:-

a) Rs.20,000 for normal delivery in Hospital.
b) Rs.50,000 in C.Section cases
c) Rs.5,000/- if delivery is conducted at residence of the employee (i.e. through midwife).

10. (i) Reimbursement of Implants such as Drug Eluting Stents, Intraocular Lens, Knee Implants/Prosthesis etc.

(ii) Full Medical facility for disabled/chronically ill children of employees.

11. Re-imbursement for the dental treatment will be twice the rates of CMH.

12. (i) Local boards be constituted for Cardiac Surgical procedures except Intra-Cardiac Implants, grant from WAPDA Welfare Fund, haemodialysis, PET Scan.

Contd.../P.4

(ii) Drugs such as medicines for treatment of Hepatitis B&C erythropoietin, haemodialysis, be empowered to local boards.

13. Companies shall individually create and maintain Employees Medical Benevolent Fund (EMBF) to cater the requirements of their employees.

14. Member from the concerned company shall be included in procurement / local purchase of medicines for WAPDA Hospital & its allied dispensaries.

15. For rest of the issues, the existing Pakistan WAPDA Medical Attendance Rules, 1979 (as amended) will remain in force.

(Saghir Ahmad)
General Manager (HR)
PEPCO

c.c.to:-

- Chairman WAPDA.
- MD (Admn) WAPDA.
- MD NTDC.
- All CEOs, DISCOs/GHCL/GENCOs/PITC
- All GMs PEPCO / GM (HR) WAPDA.
- Company Secretary PEPCO w.r.to his No.1750-57/Secy/PEPCO/BoD/M-67/Item-6 dated 10.10.2017
- Chief Auditor PEPCO
- Director General (Medical Services) WAPDA
- CEs/DGs PEPCO
- Directors PEPCO
- SO to MD PEPCO
- Sr. B&AO PEPCO
- Master File

PESHAWAR ELECTRIC SUPPLY COMPANY
Wapda House, Shami Road Peshawar · Pakistan
Phone No: +92.91.921997Fax No: +92.91.9212335
Website: www.pesco.gov.pk Email: dghrpesco@gmail.com

(40)

No. 2492-25 HR/PESCO Dated: 16/10/2018

OFFICE ORDER

In pursuance of the Board of Directors PESCO decision made in its 127th Board Meeting held on 25.09.2018, duly communicated by Company Secretary BoD PESCO vide letter No.979-81/127th BoD dated 05.10.2018, approval of CEO PESCO is hereby conveyed to adopt PEPCO Office Memorandum No.GM(HR)/HRD/A-548/1475-1500 dated 28.08.2018 regarding the Two Step Time Scale Upgradation of Dead Cadre Employees in (BPS-1 to BPS-16):

Sr. No.	Employees in BPS	Existing Pay Scales	TSU by Scales
1	1 to 13	BPS-1 to BPS-13	Two Steps
2	14 to 16	BPS-14 to BPS-16	One Step

Director General (HR)
PESCO Peshawar

Copy to:

1. All GMs PESCO HQ.
2. All Chief Engineers PESCO HQ.
3. Company Secretary BoD PESCO HQ.
4. Director General (A&S) PESCO HQ.
5. All Managers PESCO HQ.
6. Finance Director PESCO HQ.
7. All SEs (Operation) / (GSO) PESCO.
8. PDs (Construction) / (GSC) PESCO.
9. RM (M&T) PESCO.
10. XEN (Civil) / (RTC) PESCO.
11. Circulation file.

PESHAWAR ELECTRIC SUPPLY COMPANY

Wapda House, Shami Road Peshawar - Pakistan
Phone No: +92.91.921997Fax No: +92.91.9212335
Website: www.pesco.gov.pk Email: dghrpesco@gmail.com

No. 2797-348 HR./PESCO

Dated: 10/10/2018

OFFICE ORDER

In pursuance of the Board of Directors PESCO decision made in its 127th Board Meeting held on 25.09.2018, duly communicated by Company Secretary BoD PESCO vide letter No.979-81/127th BoD dated 05.10.2018, approval of CEO PESCO is hereby conveyed to adopt PEPCO Office Memorandum No. GM(HR)/HRD/A-548/1501-1526 dated 28.08.2018:

- Board of Directors PEPCO has been pleased to approve following amendment in Transport Service Rules regarding Vehicle Drivers as under:

  a) Enhancement in educational qualification from Middle to Matriculation plus valid license (LTV/HTV) with five years post-license experience for recruitment in futher.
  b) Certificate of one week training from Police/Motorway Police
  c) Upgradation of Scales from BPS-6 to BPS-8 for LTV Drivers
  d) Upgradation of Scales from BPS-7 to BPS-9 for HTV Drivers

Note

i. The incumbents are required to be up-dated with the road safety and medical fitness.

ii. The scales of existing Drivers be upgraded as mentioned above subject to undertaking from them to undergo Training from Police / Motorway Police with (1) one year otherwise they will be reverted back to their present scales.

iii. Ensure medical fitness of Drivers annually and made the certificate of fitness part of service record. Transport incharge will be responsible to implement and give the report in writing to DG (HR) of the Company by 30th January of every calendar year. Those found unfit for performing duties of Drivers be adjusted on other jobs fit to perform with the recommendations of Board headed by DG (HR) of the company with approval of respective CEO.

- The existing Transport Service rules may be treated amended to the above effect.
- The enhancement of special allowance for Driver uniformly @Rs. 500/- per month subject to certification of fitness by WAPDA Medical Board on annual basis as well as above mentioned training from Police /Motorway Police.

Director General (HR)
PESCO Peshawar

Copy to:
1. All GMs PESCO HQ.
2. All Chief Engineers PESCO HQ.
3. Company Secretary BoD PESCO HQ.
4. Director General (A&S) PESCO HQ.
6. Finance Director PESCO HQ.
7. All SEs (Operation) / (GSO) PESCO.
8. PDs (Construction) / (GSC) PESCO.
9. RM (M&T) PESCO.

PESHAWAR ELECTRIC SUPPLY COMPANY
Wapda House, Shami Road Peshawar · Pakistan
Phone No: +92.91.921997Fax No: +92.91.9212335
Website: www.pesco.gov.pk Email: dghrpesco@gmail.com

(35)

No. 26893-910 HR/PESCO

Dated: 10/10/2018

OFFICE ORDER

In pursuance of the Board of Directors PESCO decision made in its 127th Board Meeting held on 25.09.2018, duly communicated by Company Secretary BoD PESCO vide letter No.979-81/127th BoD dated 05.10.2018, approval of CEO PESCO is hereby conveyed to adopt PEPCO Office Memorandum No.GM(HR)/HRD/A-548/1396-1422 dated 28.08.2018 regarding the following amendment in Meter Reading Staff Service Rules, 1988 with regard to Basic Pay Scales:

Sr. No.	Nomenclature	Existing Pay Scales	Upgraded Pay Scales
1	Meter Reading Section Supervisor	BPS-15	BPS-16
2	Meter Supervisor Grade-II	BPS-09	BPS-11

Director General (HR)
PESCO Peshawar

Copy to:

1. All GMs PESCO HQ.
2. All Chief Engineers PESCO HQ.
3. Company Secretary BoD PESCO HQ.
4. Director General (A&S) PESCO HQ.
5. Finance Director PESCO.
6. All SEs (Operations) PESCO.
7. Circulation file.

PESHAWAR ELECTRIC SUPPLY COMPANY

Wapda House, Shami Road Peshawar - Pakistan
Phone No: +92.91.921997Fax No: +92.91.9212335
Website: www.pesco.gov.pk Email: dghrpesco@gmail.com

(35)

No. 27117-28/HR/PESCO Dated: 10/10/2018

OFFICE ORDER

In pursuance of the Board of Directors PESCO decision made in its 127th Board Meeting held on 25.09.2018, duly communicated by Company Secretary BoD PESCO vide letter No.979-81/127th BoD dated 05.10.2018, approval of CEO PESCO is hereby conveyed to adopt PEPCO Office Memorandum No.GM(HR)/HRD/A-548/1553-1578 dated 28.08.2018 regarding Upgradation of Post of Meter Mechanic / Meter Repairer / Relay Mechanic:

- Board of Directors PEPCO has been pleased to approve Upgradation of the pay scales/posts of Meter Mechanic / Meter Repairer / Relay Mechanic from BPS-07 to BPS-09.

- The relevant Service Rules amended to the above extent.

Director General (HR)
PESCO Peshawar

Copy to:

1. All GMs PESCO HQ.
2. All Chief Engineers PESCO HQ.
3. Company Secretary BoD PESCO.
4. Director General (A&S) PESCO HQ.
5. Finance Director PESCO HQ.
6. RM (M&T) PESCO.
7. Circulation file.

PESHAWAR ELECTRIC SUPPLY COMPANY

Wapda House, Shami Road Peshawar - Pakistan
Phone No: +92.91.921997Fax No: +92.91.9212335
Website: www.pesco.gov.pk Email: dghrpesco@gmail.com

(35)

No. 26911-23 HR/PESCO Dated: 10/10/2018

OFFICE ORDER

In pursuance of the Board of Directors PESCO decision made in its 127th Board Meeting held on 25.09.2018, duly communicated by Company Secretary BoD PESCO vide letter No.979-81/127th BoD dated 05.10.2018, approval of CEO PESCO is hereby conveyed to adopt PEPCO Office Memorandum No.GM(HR)/HRD/A-548/1449-1474 dated 28.08.2018 regarding the following amendment in Service Rules-Upgradation of Posts of Store System Supervisor from BPS-14 to BPS-16:

Sr. No.	Nomenclature	Existing Pay Scales	Upgraded Pay Scales
1	Store System Supervisor	BPS-14	BPS-16

Director General (HR)
PESCO Peshawar

Copy to:

1. All GMs PESCO HQ.
2. All Chief Engineers PESCO HQ.
3. Company Secretary BoD PESCO HQ.
4. Director General (A&S) PESCO HQ.
4. Addl: DG (MM) PESCO HQ
5. Finance Director PESCO HQ.
6. Circulation file.

275

PESHAWAR ELECTRIC SUPPLY COMPANY
Wapda House, Shami Road Peshawar - Pakistan
Phone No: +92.91.921997Fax No: +92.91.9212335
Website: www.pesco.gov.pk Email: dghrpesco@gmail.com

(40)

No. 26859 - 92 HR/PESCO

Dated: 10/10/2018

OFFICE ORDER

In pursuance of the Board of Directors PESCO decision made in its 127th Board Meeting held on 25.09.2018, duly communicated by Company Secretary BoD PESCO vide letter No.979-81/127th BoD dated 05.10.2018, approval of CEO PESCO is hereby conveyed to adopt PEPCO Office Memorandum No.GM(HR)/HRD/A-548/1579-1604 dated 28.08.2018 regarding Enhancement of Marriage Grant:

- Board of Directors PEPCO has been pleased to extend and enhance marriage grant for employees to the tune of Rs. One lac (Rs.100,000/-) on each event once for all serving employees (self / two children) and Rs. Two lac (Rs.200,000/-) each for two children of retired / invalided employees and widows of the employees.

Director General (HR)
PESCO Peshawar

Copy to:

1. All GMs PESCO HQ.
2. All Chief Engineers PESCO HQ.
3. Company Secretary BoD PESCO HQ.
4. Director General (A&S) PESCO HQ.
5. All Managers PESCO HQ.
6. Finance Director PESCO HQ.
7. All SEs (Operation) / (GSO) PESCO.
8. PDs (Construction) / (GSC) PESCO.
9. RM (M&T) PESCO.
10. XEN (Civil) / (RTC) PESCO.
11. Circulation file.

Arif

File - 223

26/10/18

276

PESHAWAR ELECTRIC SUPPLY COMPANY
Wapda House, Shami Road Peshawar - Pakistan
Phone No: +92.91.921997Fax No: +92.91.9212335
Website: www.pesco.gov.pk Email: dghrpesco@gmail.com

No. 17548-60 HR/PESCO Dated 21/06/2018

OFFICE ORDER

In pursuance to the Board of Directors PESCO decision made in its 124th Board Meeting held on 21.05.2018, duly communicated by Company Secretary BoD PESCO vide letter No.572-74/124th BoD dated 01.06.2018, approval is hereby conveyed to adopt the Compensation Package for Officers Posted on Promotion Out of Parent Companies, notified by PEPCO vide letter No.2068-93/GM HR dated 07.02.2018 in totality as under:

i) A dislocation allowance for every officer posted on promotion out of his parent Company equivalent to one month's basic pay per month.

ii) One week of paid leave with TA/DA as per respective entitlement every quarter. TA shall cover cost of travel from place of posting to hometown/family station of the officer.

iii) If an officer has official accommodation at the present/parent company, he may be allowed to keep that facility for the period of posting out of parent company, if he so desires.

iv) In order to compensate loss on account of house acquisition facility (that is entitled in major cities only), the officer may be allowed house rent @ 60% of basic pay to set off the financial loss on this account.

v) The tenure of posting on promotion outside parent company will be at least one year. After one year, performance will be evaluated as per performance contract on defined KPIs/targets and if the performance is according to defined KPIs and targets, the officer will be considered for transfer back to parent company according to seniority on availability of vacancy.

This is issued with the approval of Chief Executive Officer PESCO.

Director General (HR)
PESCO Peshawar

Copy to:

1. General Manager (HR) PEPCO.
2. Chief Executive Officers of all DISCOs.
3. Company Secretary BoD PESCO w.r.to above.
4. Finance Director PESCO.
5. PA to CEO PESCO.
6. Cashier CEO Office.
7. Circulation file.

Company Secretary
PESCO
Diary No. 217

277

PESHAWAR ELECTRIC SUPPLY COMPANY
Phone No. + 92.91.9210226
Fax No. + 92.91.9223136
Office of the
Company Secretary PESCO
Wapda House, Shami Road,
Peshawar

No. 572-74 / 124th BoD

Dated: 01.06.2018

Director General (HR)
PESCO HQ

Finance Director
PESCO HQ

Subject: - 124th PESCO BOARD DECISIONS

PESCO Board of Directors in its 124th Board meeting held on 21-05-2018 made the following decisions in the light of HR Sub Committee recommendations dated 02.05.2018.

Compensation package for Officers posted on Promotion out of Parent Companies

Compensation Package for officers posted on promotion out of parent Company already approved by the Board was discussed in the HR Sub Committee meeting held on 02.05.2018 in the light of DG (HR) letter No. 13387-88 dated 27.04.2018. HR Committee after discussion recommended to the Board for adoption of compensation package as per PEPCO policy conveyed by General Manager (HR) PEPCO.

Board after discussion approved to adopt/follow PEPCO's policy as recommended by the HR Sub Committee.

Health Care Policy

Health Care Policy was approved by the Board subject to clarity on point 1, 3 & 15 in 123rd BoD meeting. It was brought into the notice of HR Sub Committee that the Health Care Policy approved by the Board is subject to clarity of point 1,3 & 15 which creates ambiguity in its implementation.

HR Sub Committee after discussion recommended to the Board that the Health Care Policy may be approved and point 1, 3 & 15 be clarified from the Office concerned by PESCO Management. Financial Implication submitted by the Finance Director were also shared with the Board.

Board after discussion approved recommendation of the HR Sub Committee regarding Health Care Policy.

Please take further necessary action in the light of Board decisions and implementation position may be forwarded to this office within a week positively.

Minutes of the HR Sub Committee meeting held on 02.05.2018 duly approved by the Board are enclosed for ready reference.

Company Secretary
PESCO HQ

Copy to:-

1. SO to CEO PESCO for information.

PEPCO

PAKISTAN ELECTRIC POWER COMPANY (PVT.) LIMITED

Fax No. 042-99202176
Tele: 042-99202211/2507/2509
042-99202889/99202054

Office Of The
Managing Director (PEPCO)
507-WAPDA House, Lahore

No. 5507-9 /MD/PEPCO//GM(HR)/DCM(P)/

Dated: 14-6 /2018.

Chief Executive officer,
TESCO,
Peshawar.

Attention: D.G. (HR & ADMN)

Subject: COMPENSATION PACKAGE FOR OFFICERS POSTED ON PROMOTION OUT OF PARENT COMPANIES

Ref: office letter No. 3915/, dated; 23.04.2018.

It is informed that "as the Headquarters of TESCO/PESCO are within the same ...ing, dislocation of any sort is not involved. As such compensation package will not be admissible to such officers being not covered under the grab of displacement".

This is issued with the approval of competent authority.

(Saghir Ahmad)
General Manager (HR) PEPCO

CC:

Chief Executive Officer, PESCO Peshawar.
Master file.

DG(HR)

Company Secretary
ADG (HR)
26/6

2700
26-6-18

Company Secretary
PESCO
Diary No. 219
Date 27-6-18

27/6
APS

CHIEF EXECUTIVE PESCO
D.No. 5486
Date 21/6/18

GOVERNMENT OF PAKISTAN
MINISTRY OF HOUSING AND WORKS
******

No. F. 4(8)/92-Policy

Islamabad, the 25th June, 2018

OFFICE MEMORANDUM

SUBJECT: REVISION OF RENTAL CEILINGS FOR HIRING OF RESIDENTIAL ACCOMMODATION AT SIX SPECIFIED STATIONS I.E. ISLAMABAD, RAWALPINDI, LAHORE, QUETTA, KARACHI AND PESHAWAR.

The Federal Government is pleased to enhance rental ceiling for hiring of residential accommodation in Federal Ministries/Divisions/Attached Department/Subordinate Offices at **Islamabad, Rawalpindi, Karachi, Lahore, Quetta and Peshawar** as under w.e.f.01-07-2018.

Entitlement B.S	*Existing Rental Ceiling*		*Revised Rental Ceiling*	
	Islamabad	Other Specified Stations	Islamabad	Other Specified Stations
1-2	Rs. 3254/-	Rs. 3051/-	Rs. 4881/-	Rs. 4577/-
3-6	Rs. 5083/-	Rs. 4469/-	Rs. 7625/-	Rs. 6704/-
7-10	Rs. 7594/-	Rs. 6797/-	Rs. 11391/-	Rs. 10196/-
11-13	Rs. 11455/-	Rs. 9936/-	Rs. 17183/-	Rs. 14904/-
14-16	Rs. 14391/-	Rs. 12562/-	Rs. 21587/-	Rs. 18843/-
17-18	Rs. 19049/-	Rs. 16619/-	Rs. 28574/-	Rs.24929/-
19	Rs. 25326/-	Rs. 21674/-	Rs. 37989/-	Rs. 32511/-
20	Rs. 31806/-	Rs. 27351/-	Rs. 47709/-	Rs. 41027/-
21	Rs. 38084/-	Rs. 32920/-	Rs.57126/-	Rs. 49380/-
22	Rs. 45576/-	Rs. 41310/-	Rs. 68364/-	Rs. 61965/-

2. The enhanced rental ceilings come into force with effect from 01-07-2018 and will apply to: -

i). All cases of fresh hiring.

ii). Cases where the allottee/occupant is obliged to pay difference of rent to the owner out of his own resources. In such a case the rent may be increased upto the owner's demand (indicated at the time of hiring) or the allottee/occupant's revised rental ceiling whichever is less.

iii). Cases of houses hired under Rule 8(i) of the Accommodation Allocation Rules, 2002 or M/o Housing and Works' O.M No. 2(3)/2003-Policy dated 31-07-2004 of which lease has expired. The lease agreement may be executed with the owner as per current rental assessment of the house or the occupant's revised rental ceiling or the owner's demand, whichever is the less.

iv). Cases of houses hired under Rule 9(i) of the Accommodation Allocation Rules, 2002 on self-hiring basis: In such a case, the existing rent of the house may be increased upto the revised rental ceiling of the allottee/occupant or the rental assessment of the house whichever is less.

P.T.O

281

Government of Pakistan
Finance Division
(Regulations Wing)

No.F.2(2)R.5/2010

Islamabad, the 2nd July, 2018

OFFICE MEMORANDUM

SUBJECT: **INCREASE IN RATE OF HOUSE RENT ALLOWANCE**

The undersigned is directed to refer to the para 7 of the Finance Division O.M No. F.1/7/Imp-II/87 dated 1st July 1987 and to state that the President has been pleased to allow the increase in the House Rent Allowance by 50% of the existing amounts of House Rent Allowance admissible to the Federal Government employees, w.e.f 1-7-2018, as under:-

Location	Existing	Revised
In declared Big Cities:	45% of the minimum of Basic Pay Scale 2008	Increase in the amount of House Rent Allowance @ 50% of the existing amounts being drawn.
Other Cities	30 % of the minimum of Basic Pay Scale 2008	Increase in the amount of House Rent Allowance @ 50% of the existing amounts being drawn.

2. All other existing terms and conditions regulating the House Rent Allowance will continue to apply.

(Muhammad Shahid Ahmed Ch.)
Deputy Secretary (R-III)

All Ministries/ Divisions

P.T.O

282

DISTRIBUTION COMPANY INTEGRATED INVESTMENT PLAN (DIIP)-PESCO

This Business Plan / DIIP entails Goals and Objectives and Initiatives that will help PESCO achieve them and has been prepared with extensive cross-functional discussions, coordination and teamwork.

Contents

Section -I .....
Executive Summary .....
Section -II .....
The Company's - Baseline .....
Section -III i
Forecasts for Next Five Years i
Section -IV i
Next Five Years Goals and Objectives i
Section -V i
Projects and Programs i
Section -VI ii
Costs and Financing Plan ii
Section - VII ii
Benefits and Financial Analysis ii
Section - VIII ii
Section - IX iii
Investment Plan Implementation iii
Section - X iii
Implementation, Monitoring Plan and Reporting iii
Section - XI iii
Environmental and Social Assessment iii
Section -I 1
Executive Summary 1
Section -II 3
The Company's– Baseline 3
Section -III 19
Forecasts for Next Five Years 19
Section -IV 22
Next Five Years Goals and Objectives 22
Section -V 29
Projects and Programs – Scope 29
Section -VI 71
Costs and Financing Plan 71
DIIP 39-Costing of Commercial Improvement Plan 84

DIIP 40 -Costing of Financial Management Improvement Plan 84
DIIP 41- Costing of Human Resource Improvement Plan 85
DIIP 42 Costing of Communications Improvement Plan 85
Section - VII 88
Benefits and Financial Analysis 88
Section - VIII 89
Financial Projections for FY 2018 to FY2022 89
Investment Plan Implementation 93
Section - X 94
Implementation, Monitoring Plan and Reporting 94
Section - XI 103
Environmental and Social Assessment and Mitigation Plans 103

Section -I
Executive Summary

i. Introduction
ii. Purpose and Goal of Investment Plan
iii. Major Planning Situation
iv. Company's Investment Plan

Section -II
The Company's - Baseline

i. **General Information**
   - History
   - Geographic Coverage, Company's Structure, Human Resources and Corporate Governance
   - Statistical & Financial Information, including Purchases and Sales of Electricity, staff to customer's index, losses by network, outages etc.
   - Existing Project Design and Implementation System of DISCO
   - Existing Operation System of DISCO
   - Approving Investments, Investments made in last five years, source of financing and works executed
   - Financial Position
     - Overall Financial Performance (Profit/Loss)
     - Ratios analysis
     - Subsidies
     - Repair and maintenance expenses for the last five years

ii. **Power Demand and Supply**
   - Daily Load Demand
   - Seasonal Load Profile

iii. Secondary Transmission and Distribution Network Condition
iv. Financial Management, Budgeting Process, revenue recognition …
v. HR Management
vi. IT-MIS
vii. Commercial Management
viii. **Internal Control**
   - Expenditure (Admin & Financial) Approval
   - Investment Approval
   - Internal Audit

ix. Legal and Contractual Framework
x. Governance and Description of the relationships among the Governments
xi. **Presentation and Analysis of the main issues facing the Company**
   - Financial Issues
   - Investments Needs
   - Other Issues

Section -III
Forecasts for Next Five Years

i. Consumer Growth by Category
ii. Energy and Demand Forecasts
iii. Generation Forecast and Power Acquisition Program
iv. Anticipated Load Shedding
v. Other Changes Including Technological Advances
vi. Analysis

Section -IV
Next Five Years Goals and Objectives

i. Goals and Objectives Matrix
ii. Rationale for Setting Goals and Objectives and the Planning Criteria for Proposed Investments

Section -V
Projects and Programs

A. Plan for Expansion and Rehabilitation of Secondary Transmission System

- Expansion and Rehabilitation (two scenarios Best and optimally Achievable)
- Load Flow Studies for Best Case and optimally Achievable Cases
- Short Circuit Studies for Best Case and Optimally Achievable Cases

B. Plan for Expansion and Rehabilitation of Distribution System

- Expansion and Rehabilitation (two scenarios Best and Optimally Achievable)
- Status of Study Based Distribution System Planning Based on GIS Mapping and the Rollout Plans

C. Other Functional Improvement Plans:

i. Commercial Improvement Plan
ii. Financial Management Improvement Plan
iii. Human Resource Improvement Plan, including **Staffing Plan aligned with the Investment Plan**
iv. Communications Improvement Plan

Section -VI
Costs and Financing Plan

A. **Capital Expenditure and Additional Operating Costs for Expansion and Rehabilitation of Secondary Transmission and Distribution System (for Best and Optimally Implementable Scenarios):**
   - Summary of Annual Capital Expenditure Costs
   - Summary of Annual Recurring Costs
   - Details Costing

B. **Capital Expenditure and Additional Operating Costs for Other Functional Improvement Plans:**
   - Summary of Annual Capital Expenditure Costs
   - Summary of Annual Recurring Costs
   - Details

C. **Summary Costs for the Integrated Investment Plan (Transmission, Distribution and other Functional Plans)**
   - Summary of Cost for Best Case
   - Summary of Cost for Optimally Implementable Case
   - Summary of Annual Recurring Costs

D. **Financing Plan**

Section - VII
Benefits and Financial Analysis

A. **Expansion and Rehabilitation of Secondary Transmission and Distribution System:**
   i. Tangible Benefits
   ii. Non-tangible Benefits
   iii. Financial Analysis for the entire Transmission and Distribution Investments
   iv. Sensitivity Analysis

B. **Other Functional Improvement Plans:**
   i. Tangible Benefits
   ii. Non-tangible Benefits
   iii. Financial Analysis for the other functional plans
   iv. Sensitivity Analysis

Section - VIII
Financial Projections for FY 2018 to FY2022

Section - IX
Investment Plan Implementation

i. Business Planning Organization for Preparation of Investment Plans
ii. Planning and Design
iii. Program Management
iv. Projects Implementation
v. Summary of Manpower Requirements to Implement these Plans

Section - X
Implementation, Monitoring Plan and Reporting

i. Implementation Schedules
ii. Monitoring of Outcomes, Physical and Financial Progress
iii. Linkage of Outcomes with Performance Standards

Section - XI
Environmental and Social Assessment

Section -I
Executive Summary

i. Introduction

Peshawar Electric Supply Company (PESCO), incorporated as a Public Limited Company on 23rd April 1998, is responsible for the delivery of electricity to over 3.05 million consumers of all civil districts of Khyber Pukhtunkhwa (KPK), Pakistan as set out in PESCO's Distribution License no. 07/DL/2002, granted by NEPRA under the NEPRA Act on April 04, 2002, as a result of the restructuring of WAPDA's Power Wing, PESCO assumed its official operations and is since then being headed by a Chief Executive Officer (CEO). PESCO pays a power purchase price (in Rs/kWh) for the electricity it procures from the Central Power Purchasing Agency (CPPA) or from other sources on behalf of the CPPA which would include the generation and transmission charges regulated by NEPRA. The major objectives of the company include ensuring uninterrupted and stable power supply to all its customers along with state of the art customer care as well as establishing and operating reliable electricity distribution networks.

Currently, PESCO has 14,392 active employees, employed in eight directorates and is responsible for distributing electricity to approximately 3.33 million consumers. The consumer mix comprises approximately 87.3 % domestic consumers (2.9 million) including residential consumers in both urban and rural areas, 10% commercial consumers (.337 million) including business consumers such as markets, plazas, and offices in both urban and rural areas, 0.6% industrial consumers (0.02 million) consisting of large and small industrial loads,0.02% bulk consumers (888) consisting primarily of large societal consumers like housing societies, 0.8% agricultural consumers (0.023 million) including tube wells in rural areas, and 0.09% other consumers (31227).The sales mix consists of 54% domestic, 9% commercial, 29% industrial, 6% bulk, 1.5% agricultural, and 0.5% other consumers.

ii. Purpose and Goal of Investment Plan

The Integrated Investment Plan[1]entails PESCO's vision, mission, core values, stakeholders' needs, general indicators, sales and consumer forecasts, power supply issues with limitations, human resources and organizational development, financial projections, regulatory requirements including quality of service, subsidies and legal restrictions affecting timely collection of delinquent payments, performance indices with initiatives and risk assessment and will serve as a central reference document for integrated cross-functional planning that will help PESCO make informed decisions based on priorities.

The goal of the Investment Plan/Business Plan is to create a document which will be used by the CEO and senior managers of PESCO to focus its activities and energies for the next five years in making PESCO a financially viable company by improving the regulation and governance of the entity, introducing new technologies including upgrade of existing technology and machinery and improving human resources in line with best practices worldwide. This plan will also be utilized by the Strategic Planning Committee to the Board for regular monitoring, to ensure that company achieves its stated objectives.

[1] The term Investment Plan or Business Plan will be used interchangeably throughout this document, as NEPRA names the Business Plan as the Investment Plan

This Investment Plan covers a five year period from FY 2018 to FY 2022, encompassing the following areas:

- Defining the activities and resources available to PESCO through the incorporation agreements and laws relating to it
- Identifying projections of power demand, power resources and population served expected in the time period from 2018-2022
- Illustrating the strategic objectives for 2018-2022, aligned with optimally achievable scenario as defined by the regulator, which designated coordinators prepared to accomplish the strategic goals in the five year timeframe of the Investment Plan
- The best and optimally achievable scenarios to demonstrate what is required and what can be achieved keeping in view the resources constraints and realities on ground
- Projecting the financial impact on PESCO's bottom-line of implementing the project plans

iii. Major Planning Situation

The following challenges faced by PESCO require integrated cross functional planning:

- Technical challenges and technological advances that require PESCO to upgrade the network, including metering to receive and measure continuous and reliable flow of power
- Operational challenges to maintain continuous flow of reliable power to the customers and meet their expectations in demand dominated, load-shedding driven regime
- Institutional challenges faced while developing the capacity of PESCO
- Smooth power evacuation, especially related to variable renewable being integrated in the network
- Compliance with applicable laws and regulations
- Social responsibility to conserve energy and social up-lift

iv. Company's Investment Plan

The five year Investment Plan (FY 2018-22) is intended to be used by PESCO managers and the Strategic Planning Committee of the Board of Directors as a reference guide to the upgradation and operations of PESCO, taking into consideration the activities projected to occur in the next five years. Although the Investment Plan is based on a five year window, it will be a living document and will be updated to reflect changes in requirements.

As per regulatory requirement specified in DIIP formats, two scenarios have been worked out, Best Case Scenario (if implemented, the company will achieve NEPRA standards in five years, comes with a higher cost) and Optimally Achievable Scenario (based on what company can fund, procure and implement realistically, comes with less cost, but compromise on the performance). The Multi Year Tariff (MYT) of PESCO will be based on the Achievable Scenario, and the Best Case is prepared to demonstrate the overall needs of the DISCO to meet the benchmarks specified by NEPRA in five years.

Abstract of the business plan based on the two scenarios is presented hereunder:

Under this five year plan PESCO will expand and rehabilitate is Transmission and Distribution (T&D) systems. Moreover, plans have been prepared to improve the financial, commercial, human resource and communications functions, including IT that supports the main T&D business. From new grid stations to AMRs for commercial improvements, initiatives have been planned to improve the overall performance of the company in an integrated manner. For details on scope please refer Section-V of this plan.

Costs Summary:

- Total Cost Best Case: Rs. 69028 million.
- Total Cost Optimally Achievable Case: Rs. 40525 million.

Benefits Summary:

- Best Case: Savings of 1430 MKWh of energy through loss reduction and smooth dispersal of power from new generation.
- Optimally Achievable Case: Savings of 1175 MKWh of energy through loss reduction and smooth dispersal of power from new generation.

IFRR:

Optimally Achievable Case: 29.65% for both T&D investments

Sensitivity Analysis

The IFRR for the following scenarios are placed a

- Increasing costs by 10%. IFRR comes out to be 26.81%
- Decreasing benefits by 10%,IFRR comes out to be 26.52%
- Increasing costs and decreasing benefits by 10% each, IFRR comes out to be 23.92%
- Increasing cost by 25%,IFRR comes out to be 23.33%

Loss Reduction and Collections Targets:

PESCO will reduce the losses from 36.6% in 2018-19 to 32 % by 2022-23. PESCO has attained the collection efficiency of 88.6 % that will be improved up to 93% during the control period.

Section -II
The Company's– Baseline

i. General Information

- **History**

Peshawar Electric Supply Company, PESCO, is a Public Limited Utility Company, responsible for the distribution of electric power to the population of KPK. PESCO was incorporated in Pakistan under the Companies Ordinance 1984, on 23rd April 1998, in line with Government policy of unbundling and corporatizing Pakistan's power sector, as a result of restructuring of WAPDA's Power Wing after the enforcement of NEPRA Regulation of Generation, Transmission and Distribution of Electric Power Act (XL of 1997). PESCO's Distribution License No. 07/DL/2002 was issued by NEPRA on April 04, 2002 for the sale of power.

Geographic Coverage

The network facilities of Peshawar Area Electricity Board (PAEB) of WAPDA were transferred to PESCO after its incorporation. PESCO's service area comprises of all the civil districts of KPK, spanning a total service area of 74,521 sq.km and 3,330,907 consumers.

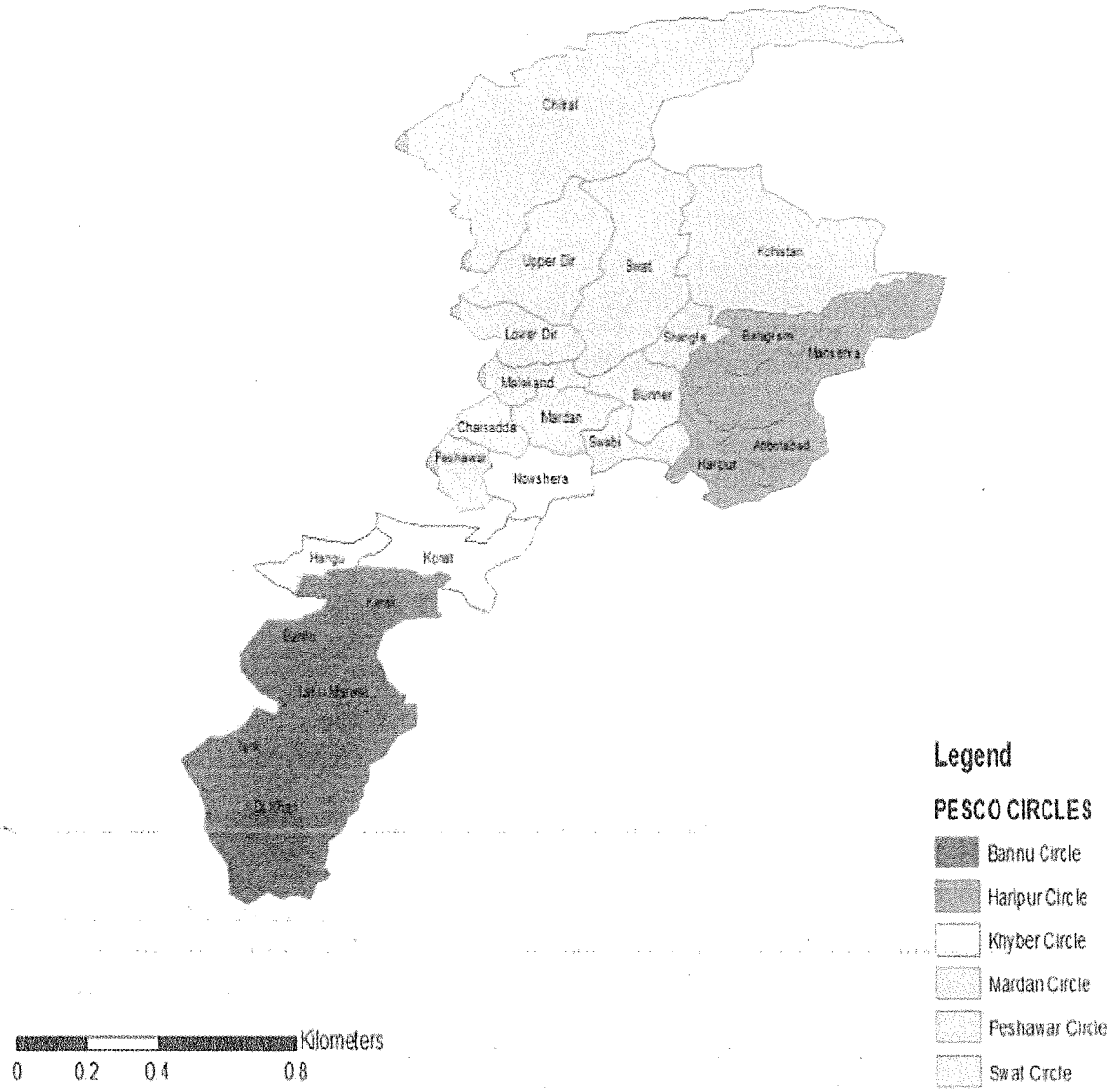

Company's Structure, Human Resources and Corporate Governance

The following organogram explains the management hierarchy of PESCO.

Its Board of Directors is responsible for overall policy making, decision making and guiding the authority. The day-to-day affairs of the company are run by its eight Executive Directors who are responsible for their respective functions, under the overall control of the Chief Executive Officer.

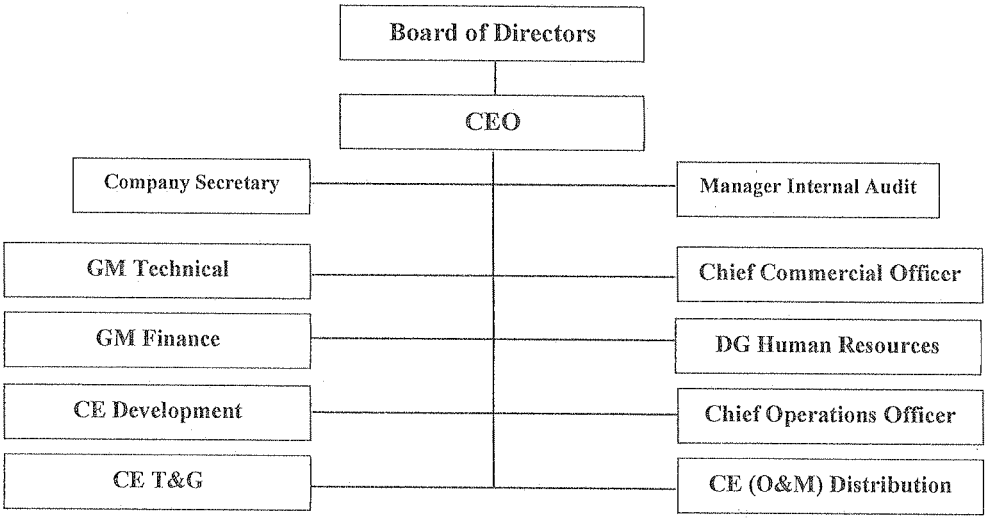

- **Statistical & Financial Information,** including Purchases and Sales of Electricity, losses, and revenue billing and collection depicting the company's financial health is tabulated below:

Description	Units	2014-15	2015-16	2016-17	2017-18	2018-19
Units Received	MkWh	11657.3	11750	12511	14220	14302
Units Sold	MkWh	7596.7	7783	8432	8796	9074
T & D Losses.	%	34.8	33.76	32.60	38.1	36.6
Revenue Billed	M.Rs.	105932.8	92638	98674	109271	135418
Revenue Collected	M.Rs.	93258.3	81119	87902	97852	120003
O & M Cost	**M.Rs.**	**13233**	**19380**	**15369**	**16875**	**21978**
Repair & Maintenance	M.Rs.	717	736	736	647	900
Salaries/Pensions	M.Rs.	11591	17634	13621	15253	19,591
Travelling Expenses	M.Rs.	174	210	222	227	292
Vehicle Expenses	M.Rs.	181	137	127	133	230
Other Expenses	M.Rs.	570	663	664	615	965

- **General level of Investments:** PESCO has made the following investments excluding consumer contribution in different projects:

(Mln Rs.)

Description	2014-15	2015-16	2016-17	2017-18	2018-19
Development of Power	915	731	991	2931	2925
Energy Loss Reduction	608	893	919	964	1500
STG	748	980	1435	1459	3500
Total	**2271**	**2603**	**3346**	**5354**	**7925**

- **Existing Project Design and Implementation System of DISCO**

The project design and implementation system of PESCO is based on the resource allocation (the anticipated amount of material required and obtained for the execution of the project), resource leveling (the required amount of resources to be provided at a proper time e.g, at the start of a phase, more work force and less material may be required as compared to the growth or maturity stage) and resource scheduling/loading (the amount of resources required during the specified phase of the project.

PESCO has the required capability, personnel and expertise to implement and execute a project. It has well established, functioning departments that are capable of handling projects of similar nature and magnitude. Some of these departments are as under:

- Engineering
- Material Management
- Finance
- Commercial

Project implementation is summarized in the form of a flow chart as below:

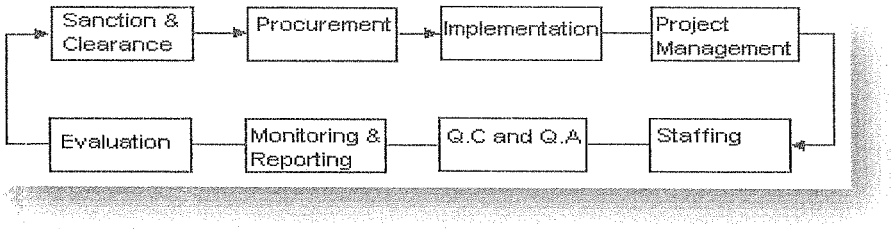

Further, to align its planning department with current and future needs of the business, PESCO is restructuring its overall planning function.

- **Existing Operation System of DISCO**

The existing administrative layout of PESCO operation system is given below:

Description	Circles	Divisions	Subdivisions	R.O Office
Distribution	8	39	187	39

Each Distribution division has one revenue /customer service office. The distribution circles, divisions, customer services offices and subdivisions deal with all types of customers of the company. The Grid System Operation (GSO) circle, divisions and subdivisions take care of and maintain the power supply through 132kV and 66kV systems comprising of the transmission lines and grid stations while the Grid System Construction (GSC) executes 66kV and 132kV grid station and transmission lines works. The Metering and Testing (M&T) section takes care of the installation, maintenance and testing of energy meters of all types. The Construction Section undertakes the implementation and

execution of investment programs of 11kV and LT (0.4 kV), System Augmentation Program (ELR and DOP), deposit works and village electrification.

ii. Power Demand and Supply

- **Daily Load Demand**
  Below is the graphical representation of load fed below and computed demand, the difference is the load-shedding:

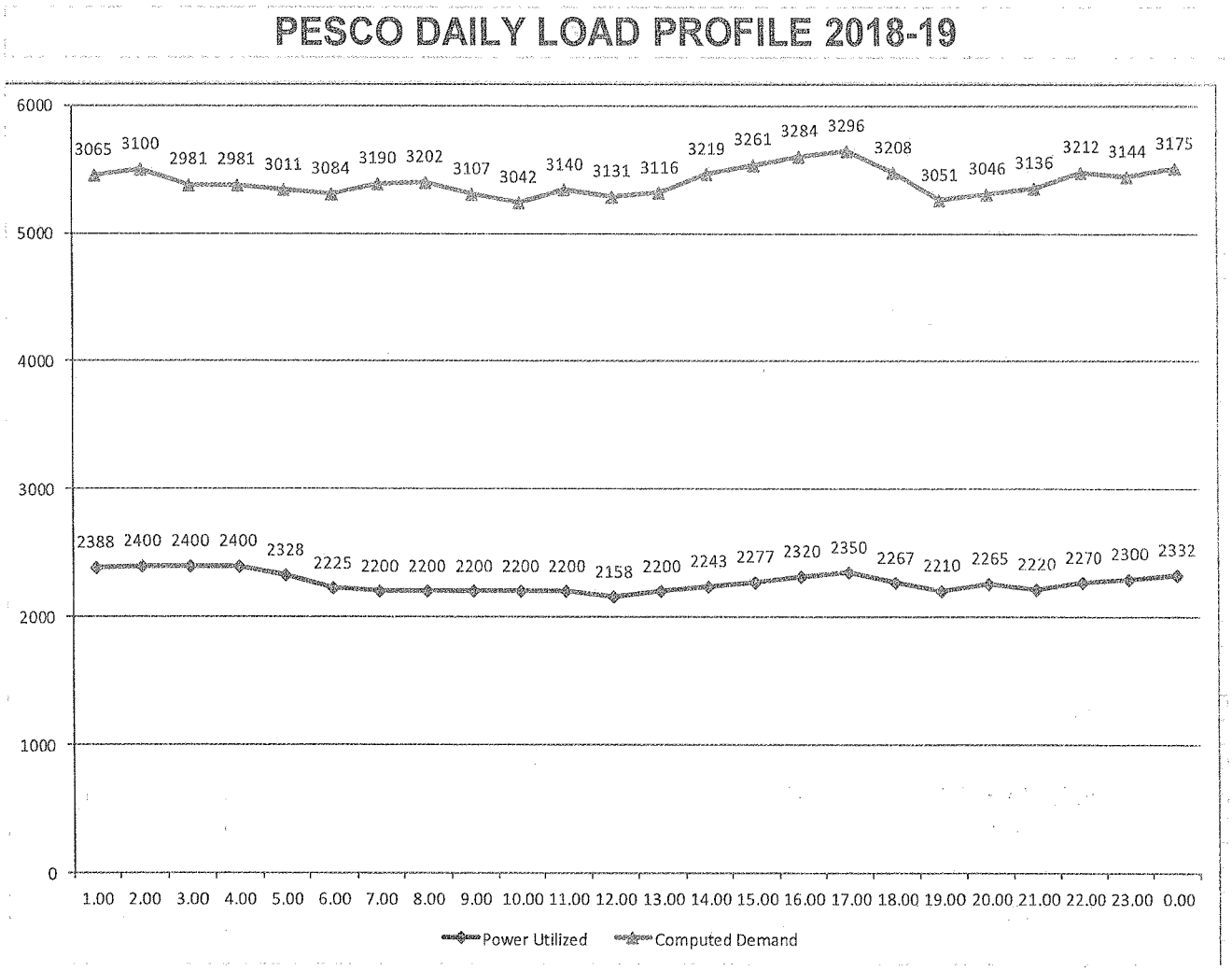

- **Seasonal Load Profile**
  Below is the graphical representation of load fed below and computed demand, the difference is the load-shedding:

PESCO MONTHLY LOAD PROFILE 2018-19

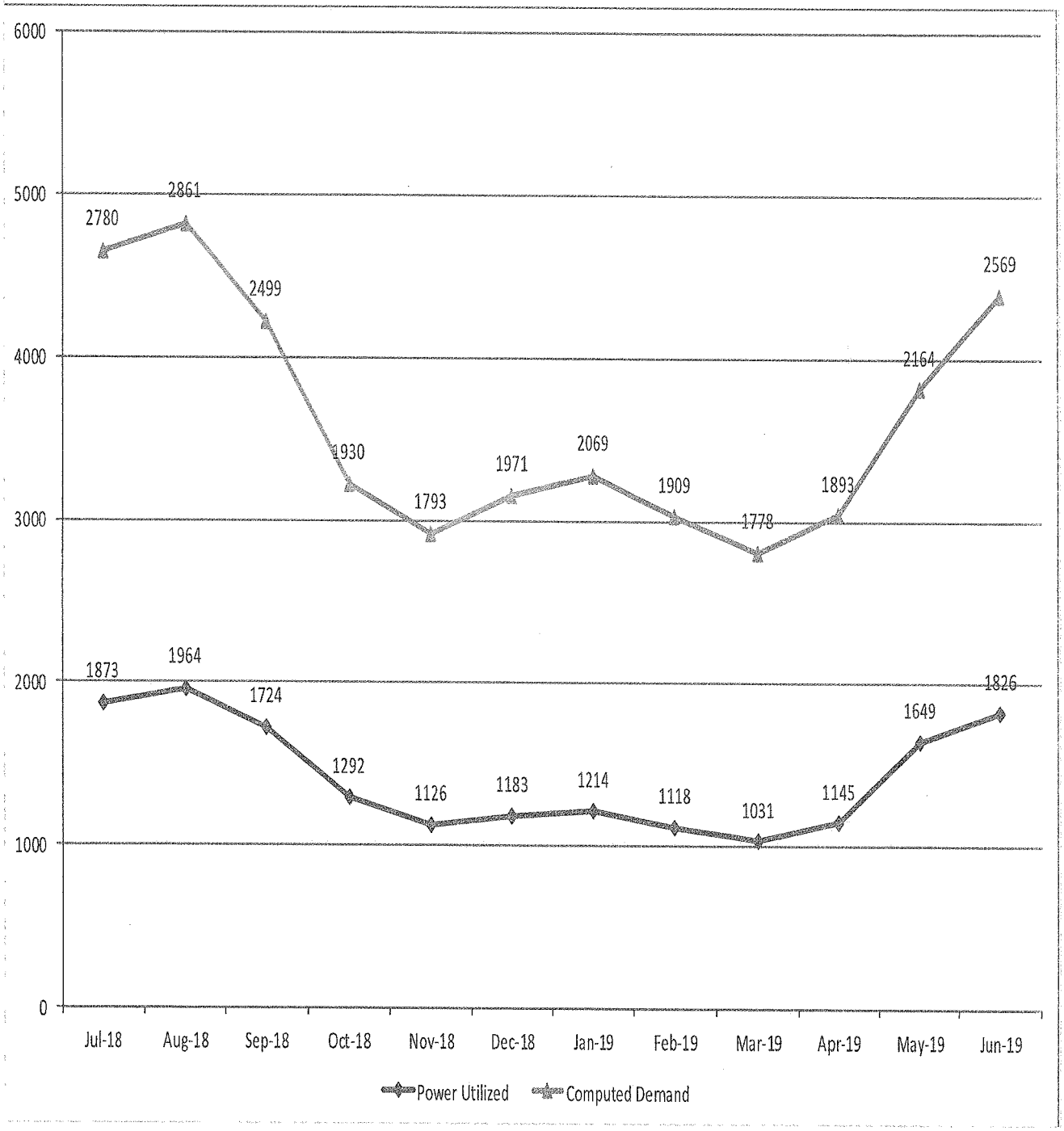

iii. Secondary Transmission and Distribution Network Condition:

PESCO has a 78 grid stations of 132 kv, 14 grid stations of 66 kv and 6 grid stations of 33 kv, thus making a total of 98 grid stations. The details by grid stations are placed at Appendix-xxx. PESCO serves 3.33 million customers through 1012 number of distribution feeders with a total length of 36,227 km of HT Lines and 44,954 km of LT Lines. The total number of distribution transformer in PESCO is 74104.

Main equipment status (power transformers, transmission lines, distribution lines and distribution transformers) is provided above.

iv. Financial Management:

The accounting systems and the corresponding back-office operations of PESCO are legacy based which are not only unable to meet the growing needs of the company but also incapable of providing timely information required for senior management to make effective decisions or properly monitor and control utility operations. The ERP is being implemented; however all the current processes are manually run. PESCO's cost/revenue centers are dispersed geographically, adding to the delay in reporting. The number and type of financial transactions are complex and diverse, and the data required managing these transactions quite voluminous.

The system of inventory / material management requires significant manual effort and does not provide real time valuation and status of the inventory. The inventory of PESCO, despite of real time updating, is updated periodically for its valuation, thus, weakening the overall internal control system which in turn does not provide timely information for the project costing or project management. The inventory at warehouse is maintained manually on Microsoft Excel without any use of inventory coding.

Lack of automation in financial system and its manual integration with billing system results in working capital difficulties for PESCO and delay follow up with banks for cash-in-transit by respective customer service offices.

The PESCO requirement for Operating and Maintenance expenses for the Financial Year 2018-19 was Rs. 21,978 million. The brief head-wise detail is provided in the table below:

S. No.	Expense Head	O&M Expense Requirement (Rs. Million)
1	Salaries and Benefits	19429
2	Repair and Maintenance	900
3	Travelling Expenses	291
4	Vehicle Expenses	230
5	Other Expenses	1128
	Total	**21,978**

v. HR Management

PESCO Existing Strength

Sr. No.	Particulars	Sanctioned	Working	Vacant
1	BPS-20	13	10	3
2	BPS-19	32	24	8
3	BPS-18	139	114	25
4	BPS-17	417	215	202
Grand Total		601	363	238

Grade 16 & Below.

Sr.No	Posts	BPS	Strength	Working	Vacant
1	A/C Officer	16	34	32	2
2	Asstt: Secretary	16	1	0	1
3	Asstt:Pvt:Secretary	16	35	27	8
4	Audit Officer	16	30	27	3
5	Computer Operator	16	61	27	34
6	Computor Teacher	16	1	1	0
7	D A O	16	98	71	27
8	Land Acq:Collector	16	1	1	0
9	MR Section Supervisor	16	39	13	26
10	Office Superintendent	16	81	29	52
11	Store Sys: Sup:	16	14	4	10
12	Supervisor (DC)	16	56	29	27
13	Supervisor (DE)	16	31	39	-8
14	T.G.Teacher	16	13	13	0
15	Tehsildar	16	9	3	6
16	Account Assistant	15	257	122	135
17	Assistant / H.C.	15	616	252	364
18	Audit Assistant	15	89	61	28
19	Care Taker	15	2	0	2
20	Commercial Asstt:	15	774	421	353
21	Commercial Supdt:	15	40	26	14
22	Data Coder	15	65	61	4
23	Data Entry Operator	15	54	46	8
24	DM-A	15	11	0	11
25	Foreman	15	29	16	13
26	L.S-I	15	844	361	483
27	LFM-I	15	10	14	-4

28	Librarian	15	1	0	1
29	LS-I(Instructor)	15	8	4	4
30	P.T.I	15	1	1	0
31	Security Inspector	15	13	5	8
32	Sr.Store Keeper	15	22	14	8
33	SSO-I	15	146	95	51
34	Test Inspector	15	21	15	6
35	A.F.M	14	46	38	8
36	Assistant BCS	14	34	0	34
37	Assistant DCS	14	34	0	34
38	Cable Jointer	14	3	2	1
39	Cashier	14	34	0	34
40	DM-B	14	57	31	26
41	Junior Store Keeper	14	29	18	11
42	L.S-II	14	808	520	288
43	Lab Assistant	14	36	9	27
44	LFM-II	14	15	13	2
45	MRS-I	14	74	18	56
46	P.S.I / A.P.P.	14	1	0	1
47	PC Operator	14	71	0	71
48	SSO-II	14	183	177	6
49	Steno Grade-II	14	130	6	124
50	Stock Verifier	14	3	0	3
51	Sub Engineer	14	17	19	-2
52	Test Asstt:	14	23	17	6
53	Transport Supervisor	14	1	1	0
54	A.D.M	13	16	24	-8
55	L.M.I	11	2,145	1,408	737
56	MRS-II	11	117	125	-8
57	Senior Clerk	11	301	182	119
58	Store Clerk	11	31	7	24
59	Work Supervisor	11	8	0	8
60	Winder	10	0	4	-4
61	Electrician-I	9	1	1	0
62	Fitter Line Man	9	4	1	3
63	Fitter-I	9	28	31	-3
64	J.Clerk W/S:	9	645	326	319
65	J/Clerk Coml:	9	117	49	68
66	Jr.Clerk A/C	9	14	7	7
67	Khatib/Imam	9	4	1	3
68	L.M-II	9	2,224	1,854	370

69	Meter Mechanic	9	30	21	9
70	Meter Reader	9	2,543	1,675	868
71	SSA	9	111	95	16
72	TCC	9	0	0	0
73	Security Sergeant	8	133	88	45
74	ALM	7	6,593	2,653	3,940
75	ASSA	7	385	289	96
76	Auditor	7	117	10	107
77	Bill Distributor	7	1,292	384	908
78	Driver	7	728	467	261
79	Electrician-II	7	7	5	2
80	Fitter-II	7	75	15	60
81	Gate Clerk	7	16	11	5
82	Helper	7	2	2	0
83	Helper(P&I)	7	10	7	3
84	Legal Clerk	7	34	0	34
85	Machine Attendant	7	20	4	16
86	Moulder	7	4	0	4
87	P/Fitter	7	4	0	4
88	Qanoongo	7	1	0	1
89	Surveyor	7	13	10	3
90	Tracer	7	109	11	98
91	Security Guard	6	1,309	616	693
92	Blacksmith	5	21	2	19
93	Carpenter	5	5	3	2
94	Electrician	5	8	2	6
95	Helper Pipe Fitter	5	2	0	2
96	Khadim/ Mozain	5	2	2	0
97	Mechanic	5	0	1	-1
98	Meter Helper	5	45	10	35
99	Naib Court	5	1	1	0
100	Patwari	5	6	0	6
101	Plumber	5	2	0	2
102	T.W.O	5	27	12	15
103	Timekeeper	5	1	0	1
104	Turner	5	6	1	5
105	Welder	5	16	5	11
106	Work Mistri	5	8	1	7
107	Daftari	4	43	6	37
108	H/Fitter	4	18	0	18
109	H/Molder	4	4	1	3

110	H/Turner	4	3	0	3
111	MATE	4	2	0	2
112	PPC Operator	4	4	2	2
113	Aya	3	1	0	1
114	Cleaner	3	112	49	63
115	Hammer Man	3	10	1	9
116	Helper Welder	3	4	0	4
117	R/Lifter	3	0	1	-1
118	Store Helper	3	109	23	86
119	Badraga	2	1	0	1
120	Barkandaz	2	3	1	2
121	Bearer	2	13	11	2
122	Beldar	2	2	0	2
123	Cook	2	8	1	7
124	Khalasi	2	30	3	27
125	Khasadar	2	37	6	31
126	Labour	2	7	4	3
127	Marter Mat	2	4	0	4
128	Painter	2	1	1	0
129	R/House Helper	2	1	1	0
130	Store Coolly	2	18	4	14
131	Chowkidar	1	320	142	178
132	Ehalmed	1	7	0	7
133	Library Attendant	1	1	0	1
134	Mali	1	220	117	103
135	Masson	1	2	0	2
136	Naib Qasid	1	863	442	421
137	Sweeper	1	460	91	369
TOTAL			**26,755**	**14,029**	**12,726**

PESCO regularly conducts training and capacity building of its employees largely through self-owned training facilities (CTCs and RTCs) and WAPDA Staff College. The trainings that are mandated by WAPDA for the Officers are conducted at the Staff College while the local training centers organize around fifteen to twenty regular training programs each year for PESCO employees. An average of 5,000 numbers of staff trained under various functional and skill based training programs each year. In the year 2015-16, a total of 5,003 (30% of total strength) employees were trained at the RTC and WAPDA Staff College. Meanwhile, the budgeted amount spend on these trainings was nearly Rs. 5 million.

PESCO has a total of five training facilities including one RTC and four CTCs to deliver trainings to the employees. Recently, PESCO has upgraded the RTC and four CTCs of PESCO.

vi. **IT-MIS**

IT which is the backbone of the business has significantly improved but still required further scaling.

The table below depicts the IT infrastructure being developed by PESCO by getting assistance from PDP:

Projects	Server	Desktop	Laptop	UPS	Printer	Scanner	LAN	WAN	Other Hardware	Software
ERP/ CIS	8	413	39	415	133	32	778 nodes	46 links	-	Oracle covering Finance, HR and MM modules for ERP & Customer Care and Billing software for CIS
HHU	-	43	-	43	43	-	-	-	479 HHUs+ 60 RF enabled HHUs	HHU Software
CSC	2	4	-	6	-	-	-	-	-	CMS v 2.2
P&E	1	6	-	7	2	-	8 nodes	-	-	ArcGIS & SynerGEE
AMR	7	181	-	182	176	-	6 nodes	1 link[2]	13,250 AMR meters	MDC Software
LDI[3]	4	6	-	7	1	-	16 nodes	1 link[4]	-	MDC Software
IT Lab at HQ	-	16	-	16	1	-	17 nodes	-	-	-
Intranet Portal Project	3	13	3	13	1	11	24 nodes	44 links	-	-
RTC Lab	1	25	3	2	1	-	26 nodes	-	-	-
Data Center	Racks, UPS, backup systems, fire safety, HVAC, biometric based security, video surveillance, backup generator etc.									
Total Quantity	23	707	45	691	358	43	875	92	N/A	-

[2]PDC at PESCO HO is connected with WAPDA House NOC @ 2 Mbps
[3]Servers for LDI and AMR are located at WAPDA House NOC.
[4]AMI at PESCO HO is connected with WAPDA House NOC @ 2 Mbps

vii. Commercial Management

The commercial operations of PESCO were legacy based and did not offer much in terms of transparency, data accuracy, system efficiency and services to consumers. Therefore, there was a dire need to improve commercial procedures and bring them at par with best practices adopted by utilities worldwide. With the vision to improve the overall commercial operations, PESCO implemented an optimal fusion of activities that would be in order to revolutionize the business practices adopted by PESCO which took its commercial operations many steps further.

The old billing system of PESCO was characterized by manual and cumbersome processes, inadequate controls, insufficient commercial focus, limited transparency and a lack of reliable information. Therefore, CIS, which is the critical backbone of customer care and commercial operations, was implemented at selected circles of PESCO.

As far as meter reading process is considered, the orthodox practice was recording the reading and calculating the consumption on customer records (Kalamzu card), transferring this data to the meter reading list, obtaining approval for the compiled readings by operating personnel and then entering the reading and the consumption into the computer which was a time consuming process leaving little or no time to verify suspect readings. Therefore, data manipulation and transcription errors were common causing the entire process to be highly inefficient with poor internal controls. In response to this, PESCO implemented the IMR initiative under which the process of meter reading was re-engineered and the role of the MIS directorate was increased to maintain registers electronically, eliminate redundancies and ensure better monitoring methods. The HHUs were implemented in different Circles of PESCO.

PESCO has also implemented a large-scale high-end meter replacement program across its territory, with AMR (GSM/GPRS) meters for up to 12,500 high-end residential, agricultural, commercial and industrial customers having a sanctioned load of more than 20 kW to ensure improved commercial performance, increased revenue (by modernizing PESCO's meter reading) and commercial management processes by reducing losses and saving energy.

The following table illustrates the trend of units purchased from CPPA and subsequent billing to the consumers by PESCO:

(Units in GWh)

Description	2013-14	2014-15	2015-16	2016-17	2017-18	2018-19
Units Received from CPPA	11233	11657	11627	12511	14220	14302
Units Billed to Customers	7471	7597	7682	8432	8796	9074
Units Lost	3759	4060	3945	4078	5425	5228
Losses (%)	33.5	34.8	33.9	33	38.1	36.6

The table below gives an illustration of the billing and collection pattern of PESCO:

(Revenue in Million Rs)

Description	2013-14	2014-15	2015-16	2016-17	2017-18	2018-19
Revenue Billed to Customers	82921	105933	98759	98674	109271	135418
Revenue Collected from Customers	71537	93258	85980	87901	97852	120003
Revenue Collection (%)	86.3	88	89.5	89	89.5	88.6

viii. Internal Control

- **Investment Approval**

The company has adopted WAPDA procedures and PEPCO approved book of Financial Powers for processing all types of expenditures. The above documents prescribe financial and administrative powers of various offices for different type of expenditures.

The investment program is categorized into three components: Development of Power, Rehabilitation / Energy Loss Reduction and Secondary Transmission Lines and Grid Stations and now been transformed into the Distribution Integrated Investment Plan (DIIP)/ Business Plan, which also covers other functional areas plans as well.

The Planning Department under supervision of CEO and Chief Engineer and in consultation with Operation, Finance and other Directorates prepared PC-1s for DOP, ELR, STG and RE. The PC-1s were submitted to Planning Division of GOP after approval of BOD/Authority for final approval from ECNEC and subsequently they were approved. The approved PC-1s are the basis of annual investment. Now DIIP will be utilized for getting regulatory approval first and then taking the desired course of approval, based on funding sources.

- **Internal Audit**

There are three types of audits conducted in PESCO Internal Audit, Govt. Audit and Audit by a chartered company. Each has different scope and objectives. The internal audit processes of PESCO are governed by the legacy systems which have missed the mark to adequately identify non-compliance with existing procedures such as:

- Units consumed but consumer not billed
- Damaged or slow meters
- Inaccurate meter reading
- Units billed to nonexistent consumers
- Failure to monitor accounts with payment arrangements

Under the co-sourcing arrangement, a co-sourcing partner was hired provided assistance to PESCO to implement a risk based audit approach as defined in the new internal audit manual for a period of one year. After a year, the performance of the audit function was evaluated and it was revealed that the internal audit function has significantly improved as the desired controls were established with in the processes. The capacity and capability of the internal audit staff was also increased.

ix. **Legal and Contractual Framework**

The primary function of PESCO is to distribute electrical power to the residents and industries within its service area.

The important legal and regulatory documents, principal contracts, and laws under which PESCO must operate are:

- The Companies Ordinance 1984
- PESCO Memorandum of Association
- PESCO Articles of Association
- Distribution License 2002
- NEPRA Performance Standard 2005
- Income Tax Ordinance 2001

The Companies Ordinance of 1984 encompasses all the rules and regulations for businesses registered with Security Exchange Commission of Pakistan (SECP). The Ordinance provides legal protection to the businesses, with the SECP keeping a close check on financial and corporate entities to ensure the stakeholders' interest. According to the Ordinance, PESCO has to follow the Memorandum of Association and Articles of Association.

According to its Memorandum of Association, in April 1998, PESCO was incorporated as a Limited Liability Company with the right to acquire properties and grid stations of WAPDA with the sole purpose of carrying on and expanding the business and supplying electricity to the areas formerly supplied by the Peshawar Area Electricity Board (AEB). Similarly, the Companies Ordnance of 1984 provides a framework of rules and regulations to PESCO, known as its Articles of Association, which cause PESCO to be classified as a Public Limited business and therefore subject to the laws which apply to such corporations.

NEPRA, under the regulation of Generation, Transmission and Distribution of Electric Power Act, 1997 (hereinafter NEPRA Act), amended by the act of parliament on 27th April 2018, wherein it has been enacted as this Act shall be called the Regulation of Generation, Transmission and Distribution of Electric Power (Amendment) Act 2018, is responsible for regulating the electricity sector in Pakistan which includes determining the Revenue Requirement, tariffs and other terms and conditions for the supply of electricity by the Generation, Transmission and Distribution Companies and to recommend the same to the Federal Government for notification. For this purpose NEPRA has laid down certain guidelines and procedures under the NEPRA Tariff Standards and Procedures Rules, 1998 and subsequent amendments made in the act. This petition is been being filed in the light of updated NEPRA Act, wherein through the act of parliament the wire business has been separated from the Commercial services of a Distribution Company, the Act has also introduced Market Operator, Electric Power Trader, Electric Power Supplier and also has

made amendments to the generation of electricity within the country. This Petition is being filed in compliance of Clause 23 (c) wherein the licensee for electric power trader has been introduced and act quotes that "no person shall, unless licensed by the Authority under this Act, engage in electric power" and clause 23 (e) wherein the term Electric Power Supply Licensee has been introduced, act states that "no person shall unless license by the Authority under this Act, engage in the supply of electric power to a consumer: provided that the holder of a distribution license on the date of coming in to effect of the Regulation of Generation, Transmission and Distribution of Electric Power (Amendment Act, 2018) shall deemed to hold a license for supply of electric power under this section for a period of 5 years from the said date In April 2002, NEPRA granted a distribution license to PESCO as per section 21 of the Regulation of Generation, Transmission and Distribution of Electric Power Act, 1997. According to it, PESCO can engage in distribution services and make sales of power to consumers in the Service Territory and the Concession Territory subject to and in accordance with the terms and conditions of the license.

NEPRA also prescribes separate performance standards for generation, transmission and distribution of safe, efficient and reliable electric power to all the consumers.

Additionally, the taxation system is defined by the Income Tax Ordinance of 2001 (Annex IV). Like all DISCOs, PESCO has to comply with this Ordinance and file the following returns:

- Annual income tax return
- Monthly sales tax return
- Statement of deductions and calculations
- Monthly withholding tax
- Quarterly advance tax

The following deductions are made by PESCO and are duly submitted to the Government of Pakistan:

- Sales tax
- Withholding tax on sales tax
- Withholding tax on goods
- Withholding tax on sales

Section -III
Forecasts for Next Five Years

Through Power Market Survey (PMS), PESCO prepares the forecast ten years. The forecasts for the period of FY2017to FY2027 are tabulated in this section. Additionally, the generation plan is prepared centrally by NTDC that is also attached.

i. Consumer Growth by Category

DIIP 1 – Consumer Growth by Category

(Nos in Million)

Circle	Domestic	Commercial	Industrial	T/ Well	Others	Total
2018-19	0.1222	0.0142	0.0013	0.0010	0.0013	0.1399
2019-20	0.1076	0.0125	0.0011	0.0009	0.0012	0.1232
2020-21	0.1076	0.0125	0.0011	0.0009	0.0012	0.1232
2021-22	0.1047	0.0121	0.0011	0.0008	0.0011	0.1199
2022-23	0.1047	0.0121	0.0011	0.0008	0.0011	0.1199

ii. Energy and Demand Forecasts

DIIP2 – Energy and Demand Forecasts

Category-wise Energy Sales (GWh) – Including Load Shedding

Description	2018	2019	2020	2021	2022
Domestic	9174	9492	9816	10147	10484
Commercial	1573	1666	1764	1867	1974
Public Light	23	23	24	24	25
Small Industries	569	592	616	641	667
M&L Industries	3619	3740	3864	3992	4124
Tube Well	144	149	153	158	163
TOTAL	**15101**	**15662**	**16237**	**16829**	**17437**
Growth %	4.2	**3.7**	**3.7**	**3.6**	**3.6**

Category-wise Energy Sales (GWh) – Excluding Load Shedding

Description	2018	2019	2020	2021	2022
Domestic	5716	5965	6218	6477	6741
Commercial	975	1039	1106	117	1251
Public Light	14	14	14	15	15
Small Industries	351	366	383	399	417
M&L Industries	2260	2350	2443	2539	2638
Tube Well	89	92	95	99	102
TOTAL	**9404**	**9827**	**10261**	**10706**	**11164**
Growth %	**5.1**	**4.5**	**4.4**	**4.3**	**4.3**

Category-wise Demand (MW) – Including Load Shedding

Description	2018	2019	2020	2021	2022
Domestic	1958	2047	2137	2228	2321
Commercial	280	300	320	342	365
Public Light	5	5	5	5	5
Small Industries	45	48	52	55	57

M&L Industries	511	531	551	572	593
Tube Well	21	22	23	24	25
TOTAL	**2589**	**2711**	**2836**	**2963**	**3093**
Growth %	**5.1**	**4.7**	**4.6**	**4.5**	**4.4**

Category-wise Demand (MW) --Excluding Load Shedding

Description	2018	2019	2020	2021	2022
Domestic	1349	1406	1464	1524	1584
Commercial	192	204	218	231	246
Public Light	3	3	3	4	4
Small Industries	35	37	38	40	42
M&L Industries	349	360	371	382	394
Tube Well	16	17	17	18	18
TOTAL	**1786**	**1863**	**1942**	**2024**	**2107**
Growth %	**4.8**	**4.3**	**4.3**	**4.2**	**4.1**

iii. Generation Forecast and Power Acquisition Program

Apart from aggressive generation additional plan out-side PESCO's territory, widespread variable renewable generation (Solar Power) influx in is also planned in PESCO's territory, along with coal based conventional power plants coming on bar in next five years.

iv. Other Changes Including Technological Advances

PESCO has introduced technology to improve its financial, commercial and overall business management, which need to be sustained and scaled-up. Therefore, preparing and implementing DIIP is extremely important.

v. Analysis

As depicted above, the power demand of the customers is growing rapidly, and extensive generation is being added. With overloaded transmission and distribution system, if proper plan like DIIP is not approved, implemented, monitored and closed in-time, then the customers will not get relieve and the whole generation investments can go down the drain.

Section -IV
Next Five Years Goals and Objectives

i. Goals and Objectives Matrix

The goals are long term targets and objectives are medium term targets. The objectives defined by PESCO are SMART i.e. Specific, Measurable, Attainable, Realistic and Timely. The target setting has been done keeping in view what can be **achieved optimally** in next five years. Table below (DIIP4) lists the goals and objectives for next five year for the company, are prepared by extensive discussions and coordination within PESCO and the signed-off goals and objectives from initial exercise are placed at Annex-1

DIIP4 - Goals and Objectives Matrix

PESCO GOALS AND OBJECTIVES

Strategic Goals	Strategic Objectives	Cordinating Directorate(s)	Leading Directorate	Tareget Measurement	Measurement 2017-18	Final Year Objective 2018-19 TO 2022-23					Project Manager	Supporting Plan
						2018-19	2019-20	2020-21	2021-22	2022-23		
1.0 Improve Operational Effeciency	1.1.a Reduce technical and comercial losses -Improved HT/LT Ratio -Improved power factor -Improved voltage profile -Reduce average length of HT feeders -AT&C based Investments -Single Phase transformers piloting to hard areas w/o LT -ABC expansion (conversion of bare LT with HT)	P&E, PD Const, PD GSC, MM, Fin, Comm, Ops, MIS	Technical	%age of KWh	Above 30%	36.6%	35%	34%	33%	32%	GM Technical, CE P&E and team	DIIP-Transmission and Distribution Plan

Strategic Goals	Strategic Objectives	Cordinating Directorate(s)	Leading Directorate	Tareget Measurement	Measurement 2017-18	Final Year Objective 2018-19 TO 2022-23					Project Manager	Supporting Plan
						2018-19	2019-20	2020-21	2021-22	2022-23		
1.0 Improve Operational Effeciency	**1.1.b** Reduce Comercial Losses	CSD, MIS and Ops	CSD	%age of KWh	This is progressive decreased by % of the commercial loss. Therefore, 3% commercial loss will be reduced	1.00%	0.50%	0.50%	0.50%	0.50%	CSD and his team	DIIP-Commercial Improvement Plan(CIP)
	1.2 Improve SAIDA/SAIFI To meet specified regulatory performance standards	Ops, T&G, O&M Dist, CSD, Technical	O&M Dist	Hours/Numbers	Over Specified Limit of NEPRA					To comply with NEPRA's specified standards		
	1.3 Improve collections to 100%	CSD, Ops, MIS, O&M Dist	CSD	%age billed amount excluding subsidy		88.6%	89%	91%	92%	93%		
	1.4 Eliminate fatal & non-fatal accidents	Ops, O&M Dist, MM, HR, Dev, T&G	Operations	No of acidents	in double figures per year	Substational Reduction	Eliminate	Eliminate	Eliminate	Eliminate	DD Safety	DIIP_Lineman Safety Plan
2.0 Improve Customer Care and Service	**2.1.1** "Soft area" Reduction in billing complaints to less than 1%	Ops, CSD, O&M Dist	CSD	%age of total consumers	More than 10%	Reduction	Reduction	Reduction	<1%	<1%	CSD and his team	DIIP-Commercial Improvement Plan(CIP)
	2.1.2 "Hard area" Reduction in billing complaints to less than 5%	Ops, CSD, O&M Dist	CSD	%age of total consumers	More than 10%	Reduction	Reduction	Reduction	<25%	<10%		
	2.2 Minimize New Connections installation duration	Ops, O&M, Dist, CSD, MM	CSD	No of days	NERPA's guidelines not complied with			To comply with NEPRA's specified standards				
	2.3 Minimize Reconnection installation duration	Ops, O&M, Dist, CSD, MM	CSD	No of days	NERPA's guidelines not complied with			To comply with NEPRA's specified standards				
	2.4 Minimize the redressal time for supply complaints	Ops, MIS, CSD, O&M Dist	MIS	Hours	NERPA's guidelines not complied with			To comply with NEPRA's specified standards				

Strategic Goals	Strategic Objectives	Cordinating Directorate(s)	Leading Directorate	Tareget Measurement	Measurement 2017-18	Final Year Objective 2018-19 TO 2022-23					Project Manager	Supporting Plan
						2018-19	2019-20	2020-21	2021-22	2022-23		
3.0 Improve PESCO's Infrastructure	**3.1 Human-ware**											
	3.1.1 Start Training & capacity building initiatives	HR & All	HR		Legacy training	TNA, Training plans, CPD					HRD and his team	Human Resources Improvement Plan (IIRIP)
	3.1.2 Fulfill the basic requirement for needs to operate for field staff	HR, FIN, Ops, O&M Dist	HR		No comprehensive system in place	LM plan part of the overall DIIP						
	3.2 Orgaware											
	3.2.1 Org A&R review and implementation	HR & All	HR		Not fully implemented	Align org structure with business strategy					HRD and his team	Organizational Improvement Plan(OIP)
	3.2.2 Improve recruitment process	All	HR		Legacy Process	Needs Improvement						
	3.2.3 Conduct yardstick study for Human Resources	All	HR		Yardstick study is obsolete	Yardstick Study to be updated						
	3.2.4 Implement Performance based management system	PR, HR	HR		Legacy system with no implementation	1)Upgrade and implement the existing acelerated promotion policy and 2) Increments based on performance ratings of PER's						
	3.2.5 Improvement in office facilities/work environment	HR & All	HR		Limited/inadequate facilities	Needs Improvement						

Strategic Goals	Strategic Objectives	Cordinating Directorate(s)	Leading Directorate	Tareget Measurement	Measurement 2017-18	Final Year Objective 2018-19 TO 2022-23					Project Manager	Supporting Plan
						2018-19	2019-20	2020-21	2021-22	2022-23		
3.0 Improve PESCO's Infrastructure	3.3 Technoware											
	3.3.1 AMI expansion	MIS, Ops, O&M Dist, CSD, P&E	CSD	% of Customers Covered with AMR	Project by PESCO is in process.	AMR/AMI at all CDPs (60 Nos) are installed. AMR/AMI at all 11 KV feeders are installed both on incoming and outgoing. AMR/AMI at consumer level upto 10 kw load will be installed in next five years.					CSD	Commercial Improvement Plan (CIP)
	3.3.2 Expand HHU and meter correction	MIS, Ops, O&M Dist, CSD, P&E	CSD	% of Customers Covered with HHUs	Project by PESCO is in process.	"Soft area" 100% is completed. "Hard area" 70% will be cover in next five years.					CSD	Commercial Improvement Plan (CIP)
	3.3.3 Replace electromechanical meters with static meters (100%)	Ops, O&M Dist, CSD, P&E	CSD	% of Customers Covered with Static Meters	Project by PESCO is in process.	100% electronic meters					CSD	Commercial Improvement Plan (CIP)
	3.3.4 P&E expansion to GIS Mapping	P&E, MIS, Ops, O&M Dist	P&E		Project by PESCO is in process.	Fully implemented in PESCO					P&E	DIIP
	3.4 Inforware											
	3.4.1 Implement ERP & its rollout	All	FIN		Project by PESCO is in process.	Extension of the IT network to support ERP in all circles. (ERP Progress = 80%)					FD	Financial Management Improvement Plan (FMIP)
	3.4.2 Implement CIS & its rollout	CSD, MIS	CSD		Project by PESCO is in process.	Extended to all circles					CSD	Commercial Improvement Plan (CIP)
	3.4.3 Expand intranet portal to PESCO	All	MIS		Deployment at H/Q level	Already deployed and will be improved further in next five years.					MIS	Communication Improvement Plan (CIP)
	3.4.4 Improve communications through email	All	MIS		Paper based communication	Promote e-communication culyure					DGIT	Internal comm. Improvement Plan(ICIP)

Strategic Goals	Strategic Objectives	Cordinating Directorate(s)	Leading Directorate	Tareget Measurement	Measurement 2017-18	Final Year Objective 2018-19 TO 2022-23					Project Manager	Supporting Plan
						2018-19	2019-20	2020-21	2021-22	2022-23		
4.0 Comply with applicable laws and regulation	4.1 Companies Ordinance 1984	FIN, Company Secetary	FIN		–	Study and Compliance Required					All	Create a Library, map all requirements and Make it part of Business Plan
	4.2 Code of Corporate Governance for Public Sector	FIN, Company Secetary	FIN		–							
	4.3 Income Tax Ordinance	Legal, FIN, CSD, MIS	FIN		–							
	4.4 Sales Tax Act	Legal, FIN, CSD, MIS	FIN		–							
	4.5 Electricity Act & rules	Legal, CSD	CSD		–							
	4.6 Theft Ordinance CPC	Ops, Legal	CSD		–							
	4.7 Industrial Relations	HR, Legal	HR		–							
	4.8 Other labor laws	HR, Legal	HR		–							
	4.9 PPRA Rules	Dev, P&E	P&E		–							
	4.10 Distribution Licence	Ops, T&G, P&E, Dev, CSD, FIN	FIN		–							
	4.11 NEPRA Act & Rules	All	FIN		–							
	4.12 Compliance with	Dev	Dev		–							
	4.13 Power Sale Agreement with CPPA	Legal, FIN, CSD, T&G	FIN		–							
5.0 Make PESCO a socially responsible corporate entity	5.3 Campaign for energy conservation	P&E, PR	PR	No of Campaigns	Limited Campaigns	DISCO's wide					Communication Head	Stakeholders Communication Plan

In the above table the goals for PESCO are divided into five major categories (i) Improve operational efficiency (this includes technical (transmission and distribution systems operational efficiency[5]), financial, commercial, human resource, employee safety etc. (ii) Customers Services and Care, (iii) Improve DISCOs Infrastructure (with only top priority projects under the four heads defined that need highest of attention), (iv) Comply with applicable laws and regulations and (v) The initiatives that the DISCO may take to make it more socially responsible corporate entity.

[5] NEPRA Performance Standards (Distribution) Rules, 2005 and Distribution Codes were consulted while preparing these objectives

ii. Rationale for Setting Goals and Objectives and the Planning Criteria for Proposed Investments

The goals and objectives that have been narrated under DIIP-4 were prepared after extensive discussions and coordination efforts within PESCO. These are the targets that PESCO has set and the projects / initiatives have been identified to meet these set targets. The resources requirements for the best case were far more than the capacity PESCO to fund and execute. Initiatives have been identified and prioritized under the optimally achievable scenario keeping in view, the following factors:

a. The reliable dispersal of power, especially the power that will be injected within PESCO in next five years, including the variable renewables
b. Funding availability as PESCO can arrange funding only up to Rs.39948 million as required under the achievable scenario and not Rs.64005 million as required under best case
c. Capacity to procure and execute is another constraint that has limited PESCO's capability to implement the achievable scope, not the larger scope envisaged under best scenario developed
d. Meeting the technical parameters specified in the Grid Code, Distribution code performance standards and consumer service manual
e. Loss reduction from 36.6% in 2018-19 to 32% in 2022-23 , the loss improvement potential saturates as the losses are further decreased and improving/maintaining collections
f. Improving internal controls, faster information availability and quality of data through back-office automation
g. Improving the competencies of the employees and their morale, through training capacity building and incentives
h. Improving corporate brand image by improving internal and external communications
i. Safety of line-staff is a key part of DIIP, includes special focus on LM safety
j. Return on investment is also considered while planning and prioritizing the interventions
k. Other objectives (social uplift e.g. village electrification) are part of the plan as well

Section -V
Projects and Programs – Scope

A. Secondary Transmission System

This section covers scope for the expansion and rehabilitation of secondary transmission network (132 kV and or 66 kV) of PESCO.

PESCO has prepared two Scenarios and the related scope. **Scenario-1** (the Best Case), that if implemented would have completely revamped the transmission network and enabled the DISCOs to achieve the NEPRA's specified Performance Standards Distribution and provision of the Distribution Code, specially the Distribution Planning Code issued by NEPRA.

The company has also prepared a **Scenario-2**(the Optimally Achievable Case) based on its procurement, execution and especially the ability to raised funding. The Multi Year Tariff (MYT) is based on based on the Optimally Achievable Case scope and costs.

The proposed sub Transmission Lines and Grid Stations works for DISCO also includes the scope for "Deposit Work" and these works are separately identified in the formats below:

- **Load Flow Studies for Best Case and Optimally Achievable Cases**

This section covers the load low flow peak-cases for of the five years (FY2018-22). The assumptions and results of these studies are discussed under this section and detailed plots are referred in the Annexures. Special situation, for instance, integration with Solar Power (large induction) over a specified period in PESCO has been paid special attention in the studies.

As per NEPRA's guidelines provided in the DIIP formats, PESCO has prepared two Scenarios and the related scope. Scenario-1 (the Best Case), that if implemented will completely revamp the transmission network and enable the DISCOs to achieve the NEPRA's specified Performance Standards Distribution and provision of the Distribution Code, specially the Distribution Planning Code issued by NEPRA.

Further, the company has also prepared a Scenario-2 (the Optimally Achievable Case) based on its procurement / execution capacity and availability / capacity to raise funding for the investments. Detailed system studies for the future years (based on two scenarios as defined above) have been carried out to determine the justification of the proposed sub-projects in PESCO area under five year DIIP and to assess their impact on the system transmission network.

The other objectives of the studies are identification of any reinforcements required with the proposed sub-projects in terms of new lines, new substations transformer addition/augmentation, reactive power compensation and switchgear addition/replacement at the substations, in addition to the already planned/under execution projects in PESCO. The benefits of the proposed sub-projects to the network of PESCO have also been determined through system studies and are discussed below.

Methodology of Analysis – Load Flow Studies

The methodology of system studies/analysis for both scenarios (best and achievable scenarios) is given as under:

i. Under this DIIP, PESCO's network expansion plan including already planned/under-execution projects have been included
ii. The proposed sub-projects to be implemented have been identified through load flow studies and identified separately
iii. The complete system model of the National Grid has been simulated, i.e., system network of not only the PESCO but also of NTDC and the neighboring DISCOs have been simulated for the purpose of analysis
iv. The assumptions on which the system studies are based have been mentioned with necessary details below
v. Two type of analysis, i.e., load flow and short circuit, have been carried out and their results have been presented in the report
vi. Load flow analysis has been carried out for the steady state normal system operating condition in order to:
    - Assess adequacy of the network to feed the proposed sub- projects
    - Determine any additional transmission reinforcement and/or reactive compensation requirement for the scope of work of sub-projects
    - Justification of proposed projects
    - Determine the benefits of the above proposed works at substations and transmission lines in terms of reduction in transmission losses, improvement in voltage profile, reduction in loading of transmission lines or transformers, spare capacity margin in the transmission system
vii. Short circuit analysis has been carried out to compute 3-phase and 1-phase short circuit levels at the substations. A comparison between the computed short levels and short circuit rating of the installed switchgear equipment at the existing substations has also been made in the vicinity of the proposed sub-projects in order to assess whether any switchgear equipment is appropriate or will become under-rated after the commissioning of the proposed sub-project(s). Recommendations for under-rated switchgear have also been made where needed, which essentially is replacement, also made part of scope.
viii. Conclusions and recommendations on the basis of technical analyses have been presented at the end

Assumptions – Load Flow Studies

The load flow studies are based on the following assumptions:

i. Latest PMS load forecast, attached as Annexure 2.The diversified values of the peak projected loads on substations, existing and new, have been modeled as per latest PMS load forecast. The loads have been adjusted as per the ratio between PESCO Peak including load shedding and the algebraic sum of recorded individual peaks of the substations of PESCO. This diversified peak is modeled in the load flow cases for FY 2018 to FY 2022 that helps in identifying scope for transmission lines
ii. The scope of substation is derived from their individual undiversified peaks separately in excel based models. This scope identified is then modeled in the load flow cases.
iii. Generation expansion plan utilized in the load flow studies is attached at Annex-3. All the existing as well as the proposed power plants, both in public and private sectors have been assumed in operation in all the study scenarios as per their expected commissioning schedules

iv. Latest PESCO's planned/on-going transmission expansion/re-enforcement projects, including substations (extension, augmentation, conversion, new), transmission lines have also been simulated in the studies as per their expected commissioning schedules

Study Criteria– Load Flow Studies

The load flow studies have been carried out keeping in view the following criteria in the PESCO's network:

Best Case

- Voltage Limits: ±5% under normal operating conditions
- Loading of transmission lines and transformers have been kept within 100% of their capacities under normal operating conditions.
- N-1 contingency analysis has been carried out and additional scope to meet that criteria is also simulated

Optimally Achievable Case

- Voltage Limits: ±5% under normal operating conditions
- Loading of transmission lines and transformers have been kept within 100% of their capacities under normal operating conditions.
- N-1 contingency analysis has not been carried out under this option as it would be require further reinforcement in PESCO's transmission network for which PESCO at this stage has no firm financing

Results of Load Flow Studies

Load flow studies have been carried out with already planned/on-going projects; and with & without proposed subprojects in 5 year plan to study their impact on the system network. The system scenarios of peak load conditions of years 2017-18 to 2021-22 have been simulated.

The year wise Single line diagram of the system showing voltage profile and MW/MVAR flows are Annexed- 4 or Best Case (FY2018 to Fy2022) and Annexure–4 for optimally achievable (FY2018 to Fy2022):

i. **Year Wise Voltage Profile**
It is evident from the study exhibits that voltage profile will improve and becomes within permissible limits.

ii. **Year Wise Loading Position** - For Grids refer to the Excel Sheet and for T/Lines refer to plots of Load Flow
Load flow studies have also been carried out for both Best and optimally achievable system scenario with the proposed rehabilitation in form of Conversions, 132 kV Capacitors and New transmission Lines and year wise loading position of Grid Stations and Transmission lines are attached (Annexure-5)

iii. Reduction In Transmission Losses

Year	MW		Units (MKWh)	
	Ideal	Realistic	Ideal	Realistic
2018-19	20.50	17.20	98.77	82.87
2019-20	12.70	14.40	61.19	69.38
2020-21	15.90	12.70	76.61	61.19
2021-22	9.70	10.22	46.73	49.24
2022-23	7.00	5.00	33.73	24.09

Expansion and Rehabilitation (Best Case) - Scope

The scope of Work for Best Case is tabulated here under:

a. Grid Stations (Best Case)

DIIP 5 - Grid Stations (Best Case)

Sr. No	Description	Total No.	Total Capacity (MVA)	2018-19 (No)	2019-20 (No)	2020-21 (No)	2021-22 (No)	2022-23 (No)
1	**New**							
a	132 KV	36	1890	5	5	5	10	11
2	**Conversion**							
a	66 to 132 KV	7	312	1	2	2	1	1
b	33 to 132 KV	1	26		1			
3	**Augmentation**							
a	132 KV	9	125	2	1	2	2	2
b	66 KV	2	13	1	1			
4	**Extension (Transformer)**							
a	132 KV	9	209		4	3	2	
b	66 KV	0						
5	**Rehabilitation**							
a	132 KV	2			2			
b	66 KV							
	Total	66	2575	9	16	12	15	14

Year	Scope of Work					
	2018-19	2019-20	2020-21	2021-22	2022-23	Total
Projects with Available Finances (Tr-III, Tr-IV) ADB						
New Grid	2					
Conversion	2					
T/Line (Total)	40					
Augmentation	3					
Extension	4					
Spare Transformer	2					
Capacitor						

b. Transmission Lines (Best Case)

i. New Line(Best Case)

DIIP 6 – Transmission Lines: New Line (Best Case)

Sr. No.	Description	Total Length (km)	2018-19 (Km)	2019-20 (Km)	2020-21 (Km)	2021-22 (Km)	2022-23 (Km)
1	132 KV D/C	453	122	76	185	53	17
2	132 KV SDT	492	73	83	114	65	157

ii. Rehabilitation/Reconductoring/Up-gradation (Best Case)

DIIP 7 – Transmission Lines: Rehabilitation/ Reconductoring / Up-gradation (Best Case)

Sr. No.	Description	Total Length (km)	2018-19 (Km)	2019-20 (Km)	2020-21 (Km)	2021-22 (Km)	2022-23 (Km)
1	132 KV D/C	0					
2	132 KV SDT	0					
3	132 KV Addl: CKT	77	21		56		

iii. Reconductoring and Rerouting (Best Case)

DIIP 8 – Transmission Lines: Reconductoring and Rerouting (Best Case)

Sr. No.	Description	Total Length (km)	2018-19 (Km)	2019-20 (Km)	2020-21 (Km)	2021-22 (Km)	2022-23 (Km)
1	132 KV D/C	20				20	
2	132 KV SDT	0					

iv. Capacitor(Best Case)

DIIP 9 – Transmission Lines: Capacitors (Best Case)

Nil

- **Expansion and Rehabilitation (Optimally Achievable Case) - Scope**

The scope of Work for Achievable Case is tabulated here under:

a. Grid Stations (Optimally Achievable Case)

DIIP 10 - Grid Stations Optimally Achievable Case

Sr. No	Description	Total No.	Total Capacity (MVA)	2018-19 (No)	2019-20 (No)	2020-21 (No)	2021-22 (No)	2022-23 (No)
1	**New**							
a	132 KV	22	1096	2	5	5	4	6
2	**Conversion**							
a	66 to 132 KV	6	312	1	2	1	1	1
b	33 to 132 KV	1	26			1		
3	**Augmentation**							
a	132 KV	9	125	2	1	2	2	2
b	66 KV	2	13	1	1			
4	**Extension (Transformer)**							
a	132 KV	9	209		4	3	2	
b	66 KV	0						
5	**Rehabilitation**							
a	132 KV	2				2		
b	66 KV							
	Total	51	1768	6	13	14	9	9

Year	Scope of Work					
	2018-19	2019-20	2020-21	2021-22	2022-23	Total
Projects with Available Finances (Tr-III, Tr-IV) ADB						
New Grid	2					
Conversion	2					
T/Line (Total)	40					
Augmentation	3					
Extension	4					
Spare Transformer	2					

b. Transmission Lines (Optimally Achievable Case)

i. New Line

DIIP 11 - Transmission Lines (Optimally Achievable): New Line

Sr. No.	Description	Total Length (km)	2018-19 (Km)	2019-20 (Km)	2020-21 (Km)	2021-22 (Km)	2022-23 (Km)
1	132 KV D/C	305	67	78	71	73	16
2	132 KV SDT	355	30	119	75	83	48

ii. Rehabilitation/Reconductoring/Up-gradation

DIIP 12 - Transmission Lines (Optimally Achievable): Rehabilitation/Reconductoring/Up-gradation

Sr. No.	Description	Total Length (km)	2018-19 (Km)	2019-20 (Km)	2020-21 (Km)	2021-22 (Km)	2022-23 (Km)
1	132 KV D/C						
2	132 KV SDT						
3	132 KV Addl: Ckt	77	21		30	26	

iii. Reconductoring and Rerouting

DIIP 13 - Transmission Lines (Optimally Achievable): Reconductoring and Rerouting

Sr. No.	Description	Total Length (km)	2018-19 (Km)	2019-20 (Km)	2020-21 (Km)	2021-22 (Km)	2022-23 (Km)
1	132 KV D/C	20				20	
2	132 KV SDT	0					0

iv. Capacitors

DIIP 14 - Transmission Lines (Optimally Achievable): Capacitors

Nil

- **Short Circuit Studies**

The computed fault levels have been compared with the short circuit rating of the installed switchgear equipment at the substations to identify any under-rated switchgear in the existing substation.

The maximum short circuit levels have been computed with the following assumptions under IEC 909 standard by setting:

- Transformers tap ratio to unity
- Line charging to zero
- Shunt elements to zero under in positive sequence
- Voltage at 1.1 p.u

As per above short circuit study results, following rating of switchgear is recommended while keeping margin for future network expansion:

- 40 kA for 132 kV
- 40 kA for 11 kV, especially for power transformers.

It has been found that the short circuit levels, as a result of the induction of the proposed subprojects, will not increase at the existing substations in their vicinity.

B. Plan for Expansion and Rehabilitation Distribution System – Scope

Under this section, the Expansion and Rehabilitation (two scenarios Best and Optimally Achievable) are presented and the Status of Study Based Distribution System Planning Based on GIS Mapping and the Rollout Plans are also discussed.

This section covers the expansion and rehabilitation of distribution network (11kV and below) of the distribution company.

PESCO has prepared two Scenarios and the related scope. **Scenario-1** (the Best Case), that if implemented will completely revamp the distribution network and enable the DISCOs to achieve

the NEPRA's specified Performance Standards for Distribution and the provisions of the Distribution Code, especially the Distribution Planning Code issued by NEPRA.

PESCO has also prepared a **Scenario-2** (the Optimally Achievable Case) based on its procurement and execution capacity and will make the MYT rate case based on this scenario.

The proposed distribution works for PESCO also includes the scope for "Deposit Works" and "Village Electrification Works" and these works are separately identified in the formats below.

Below is the overall synopsis - HT/LT ratios of distribution system and length per feeder of 11 kV line's comparison:

Existing HT/LT Ratios and length per feeder of 11 kV lines:

- Existing HT to LT Ratio = 1:1.2
- Existing average length of 11-KV feeder = 35.79 Km

After completion of **Best Case** of the 5 year plan (DIIP), the above parameters will be as under:

- HT to LT Ratio = 1.2:1
- Average length of 11-KV feeder = 20 Km

After completion of Optimally Achievable Case of the 5 year plan (DIIP), the above parameters will be as under:

- HT to LT Ratio = 1:1
- Average length of 11-KV feeder = 27 Km

Due to increased HT/LT ratio and decrease in HT average length per feeder, the technical loss of the distribution system will be decreased. This will further result in reduction of system outages making it more efficient and reliable.

- **Expansion and Rehabilitation (Best Case)**

The table DIIP 15 captures the complete scope under Best Case for distribution system:

DIIP15 - Distribution System (Best Case)

Sr. No.	Description	Unit	Quantities					
			2018-19	2019-20	2020-21	2021-22	2022-23	Total
Scope of Work for 11 kV and Below Expansion								
A.								
1	**Expansion of HT Lines**							
	Number of proposals	Nos	30	40	42	45	45	202
	Length of new HT line	Km	448	597	627	672	672	3016
	Reconductoring	Km	300	400	420	450	450	2020
2	**Transformers**							
	a. 25 KVA	Nos	400	1300	1300	1529	2000	6529
	b. 50 KVA	Nos	300	1000	1100	1342	1400	5142
	c. 100 KVA	Nos	110	150	160	170	192	782
	d. 200 KVA	Nos	15	30	35	60	60	200
	e. others KVA	Nos						
	Sub Total		825	2480	2595	3101	3652	12653
3	**11 KV Capacitors**							
	a. Fixed 450 KVAR	Nos	30	40	42	45	45	202
	b. Fixed 900 KVAR	Nos						
	c. Others	Nos						
	Sub Total		30	40	42	45	45	202
4	**11 KV Panel**	Nos	30	40	42	45	45	202
5	**11kV 500 MCM Cable**	km	13	17	19	20	20	88
Scope of Work for LT Expansion								
B.								
1	**New LT Lines**							
	Number of proposals	Nos	825	2480	2595	3101	3652	12653
	Length of new LT line (Total Wasp+ANT)	Km	495	1488	1557	1861	2191	7592
2	**LT Capacitors**							
	a. Different KVARs	Nos						
3	**Other Equipment's and Material**							
	a. Single Phase Meters	Nos	105398	100000	100000	95000	95000	495398
	b. Three Phase Meters	Nos	34000	23044	23044	24613	24613	129314
	c. MDI	Nos	500	200	200	300	300	1500
	Sub Total		139898	123244	123244	119913	119913	626212
Scope of Cost Deposit Work								
C.	**Village Electrification**							
1	**New HT Lines**							
	Length of new HT line	Km	655	687.7	722.1	758.2	796.1	3619.1

2	**New LT Lines**							
	Length of new LT line	Km	2017.1	2117.9	2223.8	2335	2451.8	11145.6
3	**Transformers**							
	a. 25 KVA	Nos	460	483	508	534	561	2546
	b. 50 KVA	Nos	2104	2210	2321	2438	2560	11633
	c. 100 KVA	Nos	472	496	521	548	576	2613
	d. 200 KVA	Nos	78	82	87	92	97	436
	e. others KVA	Nos						
	Sub Total		3114	3271	3437	3612	3794	17228
D.	**Independent Feeder**							
1	**New HT Lines**							
	Length of new HT line	Km	54	41	46	48	50	239
2	**New LT Lines**							
	Length of new LT line	Km						
3	**Transformers**							
	a. 25 KVA	Nos						
	b. 50 KVA	Nos						
	c. 100 KVA	Nos	343	168	150	98	150	909
	d. 200 KVA	Nos	114	56	50	33	50	303
	e. others KVA	Nos						
	Sub Total		457	224	200	131	200	1212
4	**11 KV Panel**	Nos	20	20	25	26	28	119

Methodology

The distribution Voltage is 11 KV on HT and 0.4 KV on LT system. Estimation of material requirement is made on the basis of SDI. All aspects are considered while deciding the design and requirement of material e.g. requirement of new line for urban as well as for Rural area. For reconductoring of urban area's line as well as rural area are considered keeping in view the size of conductor as well. Different type of assemblies are selected which is used commonly and estimation for a specific assembly is made separately.

For economical and safety purpose, PC Poles will be utilized along with Steel structure for extension of HT/LT lines in the areas under electrification. The ratio of steel structures and PC' poles will be maintained as 10:90. ACSR and AAC will be used for the purpose of current carrying from the Grid Station to the point of DS/utilization. 25 KVA, 50 KVA, 100 KVA, 200 KVA sizes of Distribution Transformers will be used. Span length of structures and P.C Poles has been worked out according to SDI so as to ensure adequate clearance, safety as well as avoiding obstruction in normal life.

Evaluation of Material Requirements

Scope of material requirements under the Distribution Expansion Project is calculated as per data collected upto 06/2018 and detailed in the following section.

The Expansion BOQs for different DOP measures have been developed as follows:

New 11 KV Switchgear (Control Panels)

11 KV panels to be added according to the following break-up:

Panels for express feeders to be built for Shifting/bifurcation of existing feeders	202 Nos

ACSR Conductors for new express line construction

It is estimated that 202-Nos feeders will require construction of express lines for their bifurcation. On the average 15 km of 3-phase HT line will be constructed per feeder based on historical construction data. The overall share of different ACSR conductors in the total of 3016 km of lines is estimated based on historical construction data and the segregate is given as below:

Km Line

Osprey	65.63%	3016 x 0.6563	1980 Km
Dog	33.48%	3016 x 0.3348	1010 Km
500 MCM	0.88%	3016 x 0.0088	27 Km
		Total	3016 Km

Calculation of Material for 11 KV System

(i) 11 kV Line Re-conductoring

Estimated re-conductoring per feeder based on sample studies, works out to be = 10 Km

Estimated % share of different Conductors in re-conductoring:

Osprey	50%
Dog	40%
Rabbit	10%

Number of feeders for rehabilitation		202 Nos.
Therefore, total re-conductoring length	202 x 10	2020 Km

The quantities of ACSR conductors required for re-conductoring are therefore:

Km Line			
Osprey	50%	2020 x 0.500	1010 KM
Dog	40%	2020 x 0.400	808 KM
Rabbit	10%	2020 x 0.10	202 KM
			Total 2020 KM

(ii) Capacitor Applications for Power Factor Improvement

The sample studies indicate that at an average, one capacitor bank of 450 kVAR is needed per feeder for improving the power factor to 95% from existing average power factor of 85% on the selected feeders. For 202 No. 11 kV feeders, requirement of capacitor banks of 450 kVAr each will, therefore, be 202 Nos.

(iii) **Augmentation of Over-loaded Transformers**

The number of transformers required for replacement against overloading is worked out as follows:

Total MVA installed in PESCO = 5741.7

Total Numbers of Customers in PESCO = 3330907

Installed KVA Per One Customer = 1.72

Total MVA required for the network = 1077

50 % will be adjusted in DOP and 50 % in ELR.

Share of Transformers required for Augmentation

25 kVA	6529	Nos.
50 kVA	5142	Nos.
100 kVA	782	Nos.
200 kVA	200	Nos.

Total: 12652 Nos.

(vi) New LT Lines

Each new transformer is estimated to have at least three LT circuits of (600 M). Based on this estimation, the LT line conductor is calculated as follows:

Total LT line required: $\frac{600 \times 12652}{1000}$ = 7592 Km

The final estimated conductor lengths are therefore:

New 3-φ LT line (Wasp)	1898 km
New 3-φ LT line (Ant)	5694 km

(vii) **LT Line Reconductoring**

The average LT line reconductoring per LT rehabilitation proposal is estimated based on historical as:

3-φ, Wasp conductor line		0.25 km
3-φ, Ant Conductor line		0.25 km
LT line reconductoring (3-φ, Wasp)	12652 x 0.25	3163 km
LT line reconductoring (3-φ, Ant)	12652 x 0.25	3163 km

(ix) **Energy Meters**

The requirement of energy meters for installation of new meters is estimated as per PMS data. Year wise installation of meters is estimated according to the increase in the growth rate for next five year.

Village Electrification:

- The estimation of scope of work in next five years is based on the historical data of the previous years which was provided by the office of PD (C&O) PESCO.

Dedicated 11-kv Feeders:

- The estimation of scope of work in next five years is based on the historical data of the financial years 2013-14, 2014-15, 2015-16, 2016-17, and 2017-18.
- HT conductor percentage is assumed as 50 % 'Osprey', 30 % 'Dog' and 20 % 'Rabbit'
- 200 KVA transformers are considered as 40 % and 100 KVA transformers are considered as 60 % of the total transformers.

Scope of Work for 11 kV and Below Rehabilitation		unit	2018-19	2019-20	2020-21	2021-22	2022-23	Total
A.								
1	**Rehabilitation of HT Lines**							
	Number of proposals	Nos	30	34	40	42	42	188
	New Line	Km	448	508	597	627	627	2807
	Reconductoring	Km	300	340	400	420	420	1880
	Re-routing	Km						
2	**New Transformers**							
	a. 25 KVA	Nos	400	1300	1300	1529	2000	6529
	b. 50 KVA	Nos	300	1000	1100	1342	1400	5142
	c. 100 KVA	Nos	110	150	160	170	192	782
	d. 200 KVA	Nos	15	30	35	60	60	200
	e. others KVA	Nos						
	Sub Total		825	2480	2595	3101	3652	12653
3	**Installation of 11 kV Panels**	Nos	30	34	40	42	42	188
4	**11kV 500 MCM Cable**	km	13	14	17	19	19	82
Scope of Work for LT Rehabilitation								
B.								
1	**LT Lines Rehabilitation**							
	New LT Line	Km	206	620	649	775	913	3163
	Reconductoring of LT Line	Km	165	496	519	620	730	2531
2	**Other Equipments and Material**							
	a. Single Phase Meters	Nos	11000	48411	46211	44010	41810	191442
	b. Three Phase Meters	Nos	1000	5000	6000	6500	7000	25500
	Sub Total		12000	53411	52211	50510	48810	216942

The narrative, assumptions and details explaining the scope above are hereunder:

Methodology for Rehabilitation

The distribution Voltage is 11 KV on HT and 0.4 KV on LT system. Estimation of material requirement is made on the basis of SDI. All aspects are considered while deciding the design and requirement of material e.g. requirement of new line for urban as well as for Rural area. For reconductoring of urban area's line as well as rural area are considered keeping in view the size of conductor as well. Different type of assemblies are selected which is used commonly and estimation for a specific assembly is made separately.

For economical and safety purpose, PC Poles will be utilized along with Steel structure for extension of HT/LT lines in the areas under electrification. The ratio of steel structures and PC' poles will be maintained as 10:90. ACSR and AAC will be used for the purpose of current carrying from

the Grid Station to the point of DS/utilization. 25 KVA, 50 KVA, 100 KVA, 200 KVA sizes of Distribution Transformers will be used. Span length of structures and P.C Poles has been worked out according to SDI so as to ensure adequate clearance, safety as well as avoiding obstruction in normal life.

Evaluation of Material Requirements

Scope of material requirements under the Distribution Rehabilitation Project is calculated as per data collected upto 06/2018 and detailed in the following section.

The BOQs for different ELR measures have been developed as follows:

New 11 KV Switchgear (Control Panels)

11 KV panels to be added according to the following break-up:

Panels for express feeders to be built for Shifting/bifurcation of existing feeders	188 Nos

ACSR Conductors for new express line construction

It is estimated that 188-Nos feeders will require construction of express lines for their bifurcation. On the average 15 km of 3-phase HT line will be constructed per feeder based on historical construction data. The overall share of different ACSR conductors in the total of 2807 km of lines is estimated based on historical construction data and the segregate is given as below:

Km Line

Osprey	65.63%	2807 x 0.6563	1842 Km
Dog	33.48%	2807 x 0.3348	940 Km
Rabbit	0.88%	2807 x 0.0088	25 Km
		Total	2807 Km

Calculation of Material for 11 KV System Rehabilitation

(i) 11 kV Line Re-conductoring

Estimated re-conductoring per feeder based on sample studies, works out to be = 10 Km

Estimated % share of different Conductors in re-conductoring:

Osprey	50%
Dog	40%
Rabbit	10%

Number of feeders for rehabilitation		188 Nos.
Therefore, total re-conductoring length	188 x 10	1880 Km

The quantities of ACSR conductors required for re-conductoring are therefore:

Km Line			
Osprey	50%	1880 x 0.500	940 KM
Dog	40%	1880x 0.400	752 KM
Rabbit	10%	1880 x 0.10	188 KM
			Total 1880 KM

(ii) Capacitor Applications for Power Factor Improvement

The sample studies indicate that at an average, one capacitor bank of 450 kVAR is needed per feeder for improving the power factor to 95% from existing average power factor of 85% on the selected feeders. For 188 No. 11 kV feeders, requirement of capacitor banks of 450 kVAr each will, therefore, be 188 Nos.

(iii) **Installation of New Transformers**

The number of new transformers required for installation is worked out as follows:

Total MVA installed in PESCO = 5741.7

Total Numbers of Customers in PESCO = 3330907

Installed KVA Per One Customer = 1.72

Total MVA required for the network = 1077

50 % will be adjusted in DOP and 50 % in ELR.

Share of Transformers required for Augmentation

25 kVA	6529	Nos.
50 kVA	5142	Nos.
100 kVA	782	Nos.
200 kVA	200	Nos.
	Total: 12652	**Nos.**

(vi) New LT Lines

Each new transformer is estimated to have at least three LT circuits of (250 M). Based on this estimation, the LT line conductor is calculated as follows:

Total LT line required: $\frac{250 \times 12652}{1000}$ = 3163 Km

The final estimated conductor lengths are therefore:

New 3-φ LT line (Wasp)	1265 km
New 3-φ LT line (Ant)	1898 km

(vii) **LT Line Reconductoring**

The average LT line reconductoring per LT rehabilitation proposal is estimated based on historical as:

3-φ, Wasp conductor line		0.1 km
3-φ, Ant Conductor line		0.1 km
LT line reconductoring (3-φ, Wasp)	12652 x 0.1	1265 km
LT line reconductoring (3-φ, Ant)	12652 x 0.1	1265 km

(ix) **Energy Meters**

The requirement of energy meters for replacement of defective meters is estimated as per Historic data which is distributed year wise.

- **Installation of ABC Cable (Best Case) - Scope**

Sr. No	Circle	Division	No. of Feeders	Length of LT Line to be replaced with ABC Cable (KM)
1	PESHAWAR	City Rural	5	190.82
		Charsadda	8	459.68
		Shabqadar	6	151.61
		Rural	9	153.43
2	BANNU	Bannu-1	13	373.96
		Lakki	8	329.41
		Tank	2	23.59
		Bannu-2	8	697.49
3	Khyber	Khyber	16	620.71
TOTAL			75	3000.7

- **Electrification works in Chitral (Best Case) – Scope**

S.NO	DESCRIPTION	UM	QTY
1	H.T STRUCTURE 45' LONG	NO	105
2	H.T STRUCTURE 36' LONG	NO	6120
3	L.T. STRUCTURE 30' LONG	NO	10010
4	ACSR DOG	MTR	707586
5	ACSR RABBIT	MTR	669545
6	AAC WASP	MTR	19936
7	AAC ANT	MTR	2681280
8	25 KVA TRANSFORMER	NO	68
9	50 KVA TRANSFORMER	NO	200
10	100 KVA TRANSFORMER	NO	37
11	STEEL CROSS ARM / D-FITTING	NO	342
12	STEEL CROSS ARM WITH BRACES	NO	12450
13	PIN INSULATOR	NO	37350
14	PIN FOR STEEL CROSS ARM	NO	37350
15	DISC INSULATOR	NO	9348
16	DEAD END CLAMP FOR DOG/RABBIT	NO	9348
17	SPOOL INSULATOR (LT)	NO	42388
18	D-SHACKLE ASSEMBALY	NO	42388
19	PLATE FORM (SINGLE STRUCTURE)	NO	268
20	PLATE FORM (DOUBLE STRUCTURE)	NO	37
21	ENY NUT	NO	9348
22	EARTH UNIT WITH THIMBLE 10'	NO	16844
23	STAY ROD WITH ELBOW AND THIMBLE	NO	9701
24	GALVENISED STEEL WIRE 10 MM	KG	265380
25	DROP OUT CUT OUT	NO	915
26	PVC 19/0.83 4/CORE	MTR	4680
27	P.G CONNECTOR T-110	NO	2408
28	P.G CONNECTOR T-150	NO	9348
29	DOUBLE ARMING BOLT 5/8" x 14"	NO	24900
30	DOUBLE ARMING BOLT 5/8" x 20"	NO	1014
31	BOLT & NUT 5/8" x 2"	NO	79014
32	BOLT & NUT 5/8" x 10"	NO	6120
33	BOLT & NUT 5/8" x 14"	NO	12450
34	WASHER ROUND 1" x 7/16"	NO	97584
35	STAY STRIP / CLAMP	NO	9701
36	500 MCM S/CORE	MTR	1800
37	11 KV PANEL	MTR	6
38	IN DOOR KIT	NO	18
39	OUT DOOR KIT	NO	18

- **Expansion and Rehabilitation (Optimally Achievable Case) - Scope**

The table DIIP 16 captures the complete scope under Achievable Case for distribution system:

DIIP16 - Distribution System (Optimally Achievable Case)

Sr. No.	Description	Unit	Quantities					
			2018-19	2019-20	2020-21	2021-22	2022-23	Total
Scope of Work for 11 kV and Below Expansion								
A.								
1	**New HT Lines**							
	Number of proposals	Nos	40	40	31	32	33	176
	Length of new HT line	Km	597	597	463	478	493	2628
2	**Transformers**							
	a. 25 KVA	Nos	70	70	100	110	120	470
	b. 50 KVA	Nos	250	150	160	170	180	910
	c. 100 KVA	Nos	150	100	110	120	130	610
	d. 200 KVA	Nos	70	32	40	50	60	252
	e. others KVA	Nos						
	Sub Total		540	352	410	450	490	2242
3	**11 KV Capacitors**							
	a. Fixed 450 KVAR	Nos	40	40	31	32	33	176
	b. Fixed 900 KVAR	Nos						
	c. Others	Nos						
	Sub Total		40	40	31	32	33	176
4	**11 KV Panel**	Nos	40	40	31	32	33	176
5	**11kV 500 MCM Cable**	km	17	17	13	14	14.256	76
Scope of Work for LT Expansion								
B.								
1	**New LT Lines**							
	Number of proposals	Nos	540	352	410	450	490	2242
	Length of new LT line (Total Wasp+ANT)	Km	324	211	246	270	294	1345
2	**LT Capacitors**							
	a. Different KVARs	Nos						
3	**Other Equipments and Material**							
	a. Single Phase Meters	Nos	14000	14000	15000	15500	16000	74500
	b. Three Phase Meters	Nos	500	550	600	650	700	3000
	c. MDI	Nos	200	250	250	300	350	1350

	Sub Total		14700	14800	15850	16450	17050	78850
Scope of Cost Deposit Work								
C.	**Village Electrification**							
1	**New HT Lines**							
	Length of new HT line	Km	280	0	152	161	237	830
2	**New LT Lines**							
	Length of new LT line	Km	290	0	162	180	230	862
3	**Transformers**							
	a. 25 KVA	Nos	50	0	35	42	48	175
	b. 50 KVA	Nos	150	0	75	90	100	415
	c. 100 KVA	Nos	40	0	21	23	35	119
	d. 200 KVA	Nos	25	0	15	17	25	82
	e. others KVA	Nos						
	Sub Total		265	0	146	172	208	791
D.	**Independent Feeder**							
1	**New HT Lines**							
	Length of new HT line	Km	39	0	39	38	16	132
2	**New LT Lines**							
	Length of new LT line	Km		0				0
3	**Transformers**							
	a. 25 KVA	Nos		0				0
	b. 50 KVA	Nos		0				0
	c. 100 KVA	Nos	35	0	35	35	10	115
	d. 200 KVA	Nos	12	0	13	13	3	41
	e. others KVA	Nos						
	Sub Total		47	0	48	48	13	156
4	**11 KV Panel**	Nos	22	0	23	23	7	75

Methodology

The distribution Voltage is 11 KV on HT and 0.4 KV on LT system. Estimation of material requirement is made on the basis of SDI. All aspects are considered while deciding the design and requirement of material e.g. requirement of new line for urban as well as for Rural area. For reconductoring of urban area's line as well as rural area are considered keeping in view the size of conductor as well. Different type of assemblies are selected which is used commonly and estimation for a specific assembly is made separately.

For economical and safety purpose, PC Poles will be utilized along with Steel structure for extension of HT/LT lines in the areas under electrification. The ratio of steel structures and PC' poles will be

maintained as 10:90. ACSR and AAC will be used for the purpose of current carrying from the Grid Station to the point of DS/utilization. 25 KVA, 50 KVA, 100 KVA, 200 KVA sizes of Distribution Transformers will be used. Span length of structures and P.C Poles has been worked out according to SDI so as to ensure adequate clearance, safety as well as avoiding obstruction in normal life.

Evaluation of Material Requirements

Scope of material requirements under the Distribution Expansion Project is calculated and detailed in the following section.

The Expansion BOQs for different DOP measures have been developed as follows:

New 11 KV Switchgear (Control Panels)

11 KV panels to be added according to the following break-up:

Panels for express feeders to be built for Shifting/bifurcation of existing feeders	176 Nos

ACSR Conductors for new express line construction

It is estimated that 176-Nos feeders will require construction of express lines for their bifurcation. On the average 15 km of 3-phase HT line will be constructed per feeder based on historical construction data. The overall share of different ACSR conductors in the total of 2628 km of lines is estimated based on historical construction data and the segregate is given as below:

Km Line

Osprey	65.63% 2628 x 0.6563	1725 Km
Dog	33.48% 2628 x 0.3348	880 Km
500 MCM	0.88% 2628 x 0.0088	23 Km
	Total	2628 Km

Calculation of Material for 11 KV System

(i) 11 kV Line Re-conductoring

Estimated re-conductoring per feeder based on sample studies, works out to be = 10 Km

Estimated % share of different Conductors in re-conductoring:

Osprey	50%
Dog	40%
Rabbit	10%

Number of feeders for rehabilitation 176 Nos.
Therefore, total re-conductoring length 176 x 10 1760 Km
The quantities of ACSR conductors required for re-conductoring are therefore:

Km Line

Osprey	50%	1760 x 0.500	880 KM
Dog	40%	1760x 0.400	704 KM
Rabbit	10%	1760 x 0.10	176 KM
			Total 1760 KM

(ii) Capacitor Applications for Power Factor Improvement

The sample studies indicate that at an average, one capacitor bank of 450 kVAR is needed per feeder for improving the power factor to 95% from existing average power factor of 85% on the selected feeders. For 176 No. 11 kV feeders, requirement of capacitor banks of 450 kVAr each will, therefore, be 176 Nos.

(iii) Augmentation of Over-loaded Transformers

The number of transformers required for replacement against overloading is worked out as follows:

Share of Transformers required for Augmentation

25 kVA	470	Nos.
50 kVA	910	Nos.
100 kVA	610	Nos.
200 kVA	252	Nos.
	Total: 2242	**Nos.**

(vi) New LT Lines

Each new transformer is estimated to have at least three LT circuits of (600 M). Based on this estimation, the LT line conductor is calculated as follows:

Total LT line required: $\frac{600 \times 2242}{1000}$ = 1345 Km

The final estimated conductor lengths are therefore:

New 3-φ LT line (Wasp) 336 km

New 3-φ LT line (Ant) 1009 km

(vii) **LT Line Reconductoring**

The average LT line reconductoring per LT rehabilitation proposal is estimated based on historical as:

3-φ, Wasp conductor line		0.25 km
3-φ, Ant Conductor line		0.25 km
LT line reconductoring (3-φ, Wasp)	2242 x 0.25	561 km
LT line reconductoring (3-φ, Ant)	2242 x 0.25	561 km

(ix) **Energy Meters**

The requirement of energy meters for installation of new meters is estimated as per our demand for each year.

Scope of Work for 11 kV and Below Rehabilitation		unit	2018-19	2019-20	2020-21	2021-22	2022-23	Total
A.								
1	**Rehabilitation of HT Lines**							
	Number of proposals	Nos	32	19	30	28	28	137
	Bifurcation	Nos	32	19	30	28	28	137
	Reconductoring	Km	320	190	300	280	280	1370
	Re-routing	Km						
2	**New Transformers**							
	a. 25 KVA	Nos	3	80	135	140	160	518
	b. 50 KVA	Nos	258	320	355	360	350	1643
	c. 100 KVA	Nos	268	240	275	280	290	1353
	d. 200 KVA	Nos	69	80	90	80	90	409
	e. others KVA	Nos						
	Sub Total		598	720	855	860	890	3923
3	**Installation of 11 kV Panels**	Nos	32	19	30	28	28	137
4	**11kV 500 MCM Cable**	km	14	9	13	12	12	59
Scope of Work for LT Rehabilitation								
B.								
1	**LT Lines Rehabilitation**							
	New LT Line	Km	120	144	171	172	178	785

	Reconductoring of LT Line	Km	90	108	128	129	134	588
2	**Other Equipments and Material**							
	a. Single Phase Meters	Nos	8000	12000	13000	13500	14000	60500
	b. Three Phase Meters	Nos	400	600	650	650	650	2950
	Sub Total	Nos	8400	12600	13650	14150	14650	63450

Methodology for Rehabilitation

The distribution Voltage is 11 KV on HT and 0.4 KV on LT system. Estimation of material requirement is made on the basis of SDI. All aspects are considered while deciding the design and requirement of material e.g. requirement of new line for urban as well as for Rural area. For reconductoring of urban area's line as well as rural area are considered keeping in view the size of conductor as well. Different type of assemblies are selected which is used commonly and estimation for a specific assembly is made separately.

For economical and safety purpose, PC Poles will be utilized along with Steel structure for extension of HT/LT lines in the areas under electrification. The ratio of steel structures and PC' poles will be maintained as 10:90. ACSR and AAC will be used for the purpose of current carrying from the Grid Station to the point of DS/utilization. 25 KVA, 50 KVA, 100 KVA, 200 KVA sizes of Distribution Transformers will be used. Span length of structures and P.C Poles has been worked out according to SDI so as to ensure adequate clearance, safety as well as avoiding obstruction in normal life.

Evaluation of Material Requirements

Scope of material requirements under the Distribution Rehabilitation Project is calculated and detailed in the following section.

The BOQs for different ELR measures have been developed as follows:

New 11 KV Switchgear (Control Panels)

11 KV panels to be added according to the following break-up:

Panels for express feeders to be built for
Shifting/bifurcation of existing feeders 137 Nos

ACSR Conductors for new express line construction

It is estimated that 137-Nos feeders will require construction of express lines for their bifurcation. On the average 15 km of 3-phase HT line will be constructed per feeder based on historical construction data. The overall share of different ACSR conductors in the total of 2046 km of lines is estimated based on historical construction data and the segregate is given as below:

Km Line			
Osprey	65.63%	2046 x 0.6563	1343 Km
Dog	33.48%	2046 x 0.3348	685 Km
500 MCM	0.88%	2046 x 0.0088	18 Km
		Total	2046 Km

Calculation of Material for 11 KV System Rehabilitation

(i) 11 kV Line Re-conductoring

Estimated re-conductoring per feeder based on sample studies, works out to be = 10 Km

Estimated % share of different Conductors in re-conductoring:

Osprey	50%
Dog	40%
Rabbit	10%

Number of feeders for rehabilitation 137 Nos.
Therefore, total re-conductoring length 137 x 10 1370 Km
The quantities of ACSR conductors required for re-conductoring are therefore:

Km Line			
Osprey	50%	1370 x 0.500	685 KM
Dog	40%	1370 x 0.400	548 KM
Rabbit	10%	1370 x 0.10	137 KM
			Total 1370 KM

(ii) Capacitor Applications for Power Factor Improvement

The sample studies indicate that at an average, one capacitor bank of 450 kVAR is needed per feeder for improving the power factor to 95% from existing average power factor of 85% on

the selected feeders. For 137 No. 11 kV feeders, requirement of capacitor banks of 450 kVAr each will, therefore, be 137 Nos.

(iii) **Installation of New Transformers**

The number of new transformers required for installation is worked out as follows:

Share of Transformers required

25 kVA	518	Nos.
50 kVA	1643	Nos.
100 kVA	1353	Nos.
200 kVA	409	Nos.
	Total: 3923	**Nos.**

(vi) New LT Lines

Each new transformer is estimated to have at least two LT circuits of (200 M). Based on this estimation, the LT line conductor is calculated as follows:

Total LT line required: $\frac{200 \times 3923}{1000}$ = 785 Km

The final estimated conductor lengths are therefore:

New 3-φ LT line (Wasp)	392 km
New 3-φ LT line (Ant)	392 km

(vii) **LT Line Reconductoring**

The average LT line reconductoring per LT rehabilitation proposal is estimated based on historical as:

3-φ, Wasp conductor line		0.05 km
3-φ, Ant Conductor line		0.1 km
LT line reconductoring (3-φ, Wasp)	3923 x 0.05	196 km
LT line reconductoring (3-φ, Ant)	3923 x 0.1	392 km

(ix) **Energy Meters**

The requirement of energy meters for replacement of defective meters is estimated as per Historic data which is distributed year wise.

- **Installation of ABC Cable (Optimally Achievable Case) - Scope**

Sr. No	Circle	Division	No. of Feeders	Length of LT Line to be replaced with ABC Cable (KM)
1	PESHAWAR	City Rural	5	190.82
		Charsadda	8	459.68
		Shabqadar	6	151.61
		Rural	9	153.43
2	BANNU	Bannu-1	13	373.96
		Lakki	8	329.41
		Tank	2	23.59
		Bannu-2	8	697.49
3	Khyber	Khyber	16	620.71
TOTAL			75	3000.7

- **Electrification works in Chitral (Best Case) – Scope**

S.NO	DESCRIPTION	UM	QTY
1	H.T STRUCTURE 45' LONG	NO	105
2	H.T STRUCTURE 36' LONG	NO	6120
3	L.T. STRUCTURE 30' LONG	NO	10010
4	ACSR DOG	MTR	707586
5	ACSR RABBIT	MTR	669545
6	AAC WASP	MTR	19936
7	AAC ANT	MTR	2681280
8	25 KVA TRANSFORMER	NO	68
9	50 KVA TRANSFORMER	NO	200
10	100 KVA TRANSFORMER	NO	37
11	STEEL CROSS ARM / D-FITTING	NO	342
12	STEEL CROSS ARM WITH BRACES	NO	12450
13	PIN INSULATOR	NO	37350
14	PIN FOR STEEL CROSS ARM	NO	37350
15	DISC INSULATOR	NO	9348
16	DEAD END CLAMP FOR DOG/RABBIT	NO	9348
17	SPOOL INSULATOR (LT)	NO	42388
18	D-SHACKLE ASSEMBALY	NO	42388
19	PLATE FORM (SINGLE STRUCTURE)	NO	268
20	PLATE FORM (DOUBLE STRUCTURE)	NO	37
21	ENY NUT	NO	9348
22	EARTH UNIT WITH THIMBLE 10'	NO	16844
23	STAY ROD WITH ELBOW AND THIMBLE	NO	9701

24	GALVENISED STEEL WIRE 10 MM	KG	265380
25	DROP OUT CUT OUT	NO	915
26	PVC 19/0.83 4/CORE	MTR	4680
27	P.G CONNECTOR T-110	NO	2408
28	P.G CONNECTOR T-150	NO	9348
29	DOUBLE ARMING BOLT 5/8" x 14"	NO	24900
30	DOUBLE ARMING BOLT 5/8" x 20"	NO	1014
31	BOLT & NUT 5/8" x 2"	NO	79014
32	BOLT & NUT 5/8" x 10"	NO	6120
33	BOLT & NUT 5/8" x 14"	NO	12450
34	WASHER ROUND 1" x 7/16"	NO	97584
35	STAY STRIP / CLAMP	NO	9701
36	500 MCM S/CORE	MTR	1800
37	11 KV PANEL	MTR	6
38	IN DOOR KIT	NO	18
39	OUT DOOR KIT	NO	18

- **Status of Study Based Distribution System Planning Based on GIS Mapping and the Transition Plan**

The status as per FY2018-19 on the mapping of HT and LT network and studies based on GIS mapped network on modern planning analysis tool(s) is provided in DIIP 18-19. Also, the plan to map the whole HT and LT network and subsequent conversion to planning based on GIS mapping using modern state of the art tools is given in table DIIP 18-19.

DIIP17 - Study of Distribution System Planning Based on GIS Mapping and the Transition Plan

Sr. No.	Description	Unit	Quantities						
			2018-19	2019-20	2020-21	2021-22	2022-23	2023-24	Total
GIS Mapping									
1	**HT Mapping/updation**								
	Number of 11 kV Feeders	Nos	141	200	200	200	200	200	1141
	Length of HT Lines mapped	Km	7427	9000					
2	**LT Mapping**								
	Number of LT Lines	Nos	75	200	200	180	165	180	1000
	Length of LT Lines mapped	Km	3000						
3	**Tools Required**								
	Development of Enterprise GIS Solution	Nos	1						
	Plotters	Nos		8					
	Capacity Building of PESCO staff on GIS/SynerGEE Electric		25	25	25	25	25	25	150

Sr. No.	Description	Unit	Quantities						
			2018-19	2019-20	2020-21	2021-22	2022-23	2023-24	Total
Study Based Planning using GIS Maps with Modern Planning Tools - Transition Plan									
1	Tools Required								
	Simulation Software Licenses	Nos		3	3	3	3		

PESCO is comprised of 1012 number 11kV feeders having length of 36227 Km. PESCO is pioneer among the DISCO of Pakistan to start GIS activity of its distribution system and till 30th june 2019, 869 number 11 kV feeders have been mapped. Once HT Mapping complete, updating will be started. However, digitization of LT network will be completed by out-sourcing.

Mapping of LT network will be started in FY 2018-19 and will be completed on 2022-23, whereas mapping of additional LT system will be carried out by PESCO resources.

In order to carry out GIS field survey and its updating, tools like GPS sets, computers, printers and SynerGEE licenses will be required. In addition PESCO Planning & Engineering need a comprehensive Enterprise GIS Solution that enables centralized, enterprise –level geodatabase management and server-based publication of maps and geographic information services throughout the enterprise and on the Internet as web services.

C. Other Functional Improvement Plans:

i. Commercial Improvement Plan

This plan covers the commercial improvement activities including but not limited to metering (including AMRs), Hand Held Units based meter reading, improvement in billing systems, anti-theft initiatives, consumers database update, customers services improvement initiatives etc. The scope that what will be done in each of the five year under this business plan is provided here. The narrative shall is supported by justification.

DIIP18 - Commercial Improvement Plan

Commercial Improvement Plan Items (Illustrations below)		FY-2018-19	FY-2019-20	FY-2020-21	FY-2021-22	FY-2022-23	Total
		Total	Total	Total	Total	Total	Total
A	AMR Metering	0	150	150	150	150	600
B	Electronic Metering	0	60	60	60	60	240
C	New CIS system	0	120	120	120	120	480
D	HHUs for meter reading	0	5	5	5	5	20
E	Consumer Census	0	0	50	50	50	150
F	Anti-theft efforts	0	440	440	440	440	1760

G	**IT infrastructure to support new initiatives**	0	2	2	2	2	8
F	**Others etc…**						
Total		0	777	827	827	827	3258

The Integrated Commercial Improvement Plan (ICIP) broadly aims to demonstrate commercial loss reduction, improvement in revenues and improvement in customer services through process automation, transparency, accountability, and improved productivity in order to create a foundation for sustainable commercial operations. Additional goals and objectives include:

Please refer table DIIP-4 for complete mapping of ICIP with goals and objectives. Here are the highlights related to commercial interventions:

- Improving PESCO's operational efficiency through:
  - Reduced commercial losses by 1% progressively over the period of five years
  - Maintaining revenue recovery up to 100% in next five years

- Improving customer care and services:
  - Reducing complaints related to billings to less than 0.1%
  - Minimizing new connections installation duration to comply with NEPRA's requirements
  - Minimizing reconnection installation duration to comply with NEPRA's requirements
  - Maximizing the time between date of receipt of bill and due date (10 days)

- Improving PESCO's infrastructure:
  - Implementing CIS and its rollout to overcome billing errors and ensure more controls over billing through modern technology

Other related objectives:

- Streamlined procedure without compromising system of internal controls
- Re-direction of documents on an efficient path to reduce revenue cycle and process cycle time
- Faster complaint resolution and timely availability of accurate information for better decision making
- Increased accuracy of billing through reduction of human interface in commercial processes
- Increased efficiency, easy access and administration through an online complaint system

Problem Statement (Baseline-Defined)

The current commercial operations of DISCOs are legacy based and do not offer much in terms of transparency, data accuracy, system efficiency and services to consumers. Therefore, there is a dire need to improve commercial procedures and bring them at par or close to best practices adopted by utilities worldwide. The commercial cycle starts with meter readings (which is manual), billing (which is being done through a legacy billing system), collections and customers services, which also needs considerable improvements.

Response

As a result of comprehensive planning exercise, PESCO has identified some low cost and quick impact interventions that would transform the way PESCO operate commercially and would bring a paradigm shift in its commercial operations. The ICIP is an optimal fusion of all the activities that would be implemented through the course of five years to revolutionize the business practices adopted by PESCO and take its commercial operations further.

To improve the efficiency and accuracy of the consumer billing process, CIS will be scaled-up. The updated consumer's database from the consumer census will be utilized to populate the CIS database i.e. through IMR. In addition, the data on electricity consumption, whether received from AMR meters or HHUs, will be processed through CIS. This will shorten the meter reading and billing cycle thus ensuring that cash flows hit the ledgers of the DISCO much sooner and with less effort. Further, in order to curb potential theft and non-recovery, a surveillance unit will also be setup across the DISCOs that will be responsible to monitor incidents of theft and guard the revenues of the company. This cell will also enforce the nonpaying consumers to pay their outstanding dues. To achieve excellence in customer services, the Customer Service Centers (CSCs) will be upgraded in each subdivision. These centers will facilitate the consumers and improve the brand image of PESCO in the eyes of the consumers. In conjunction, a Customers Management System (CMS) will be launched all across PESCO, along with a toll free number where consumers can file their complaints.

All these integrated commercial efforts will create a synergized effect of improving the commercial performance of PESCO and making it a more profitable entity. Therefore, based on the return on investment offered, these projects have been chosen.

Customers Information System (CIS) Extension – Seven Remaining Circles

The operations of DISCOs are characterized by manual and cumbersome processes, inadequate controls, insufficient commercial focus, limited transparency and a lack of reliable information. As a result, operations are highly inefficient with substantial revenue leakages and poor customer orientation. Integrating and automating core commercial functions like meter reading and billing/collections will minimize the human element in commercial processes and lay the foundation for sustainable revenue cycle reforms.

Integrating and automating core commercial functions like meter reading and billing/collections that will minimize the human element in commercial processes and lay the foundation for sustainable revenue cycle reforms is being planned. From customer care and metering to billing, payments, credit and collections, these applications enable the customer experience and support all aspects of billing and revenue collections. Augmented with HHU meter reading devices, the CIS will generate accurate consumer bills and a one-window customer services facility will provide improved customer experience. This will result in improved operational efficiency, increased accuracy of bills, reduced process cycle time and more efficient customer services with a reduction in customer complaints.

Therefore, CIS, which is the critical backbone of customer care and commercial operations, is being implemented at PESCO and Power Information Technology Company (PITC) at Peshawar Circle.

CIS is a web based application system. The required servers and allied hardware is being provided that has the capacity to cover the entire company's customer's base. PITC was developed the CIS application whereas Oracle license for database was purchased by PESCO. The CIS rollout comprises

of numerous elements including the application software, database engine, computer hardware and networks (LANs and WANs), network installation and testing, data conversion from legacy system to a new system, data cleansing, pre-installation and on-the-job training, and operational support for a limited time. All these activities will be done by PESCO.

ii. Financial Management Improvement Plan

PESCO is implementing ERP and the costs for ERP implementation are already covered. Further PESCO started work to improve the internal audit function and audit and accounting manuals. Under this plan PESCO envisages to conduct specialized studies like Assets tagging and valuation. Provision for covering the bandwidth operational costs is also made under this DIIP for ERP. Further staffing required to scale ERP company-wide is part of the HR plan.

DIIP19 - Financial Management Improvement Plan

Financial Improvement Plan Items (Illustrations below)		FY-2018-19	FY-2019-20	FY-2020-21	FY-2021-22	FY-2022-23	Total
		Total	Total	Total	Total	Total	Total
A	ERP system implementation						
B	Revamping the Internal Audit		50				50
C	Other studies and models preparation						
G	IT infrastructure to support new initiatives						
F	Others etc…						
Total			50				50

1. Internal audit Capacity Building / Trainings: PESCO during 2017-18 has planned capacity building of its internal audit function to effectively discharge its functional as per new internal audit manual including automation etc.

iii. Human Resource Improvement Plan

This plan covers the HR improvement activities, revamping / addition of training facilities, training of employees through external facilities, conducting some studies, improving the working environment etc. Under this section scope that what will be done in each of the five year under of business plan is discussed. The narrative shall also be supported by the justification.

DIIP20 - Human Resource Improvement Plan

HR Improvement Plan Items (Illustrations below)		FY-2018-19	FY-2019-20	FY-2020-21	FY-2021-22	FY-2022-23	Total
		Total	Total	Total	Total	Total	Total
A	Revamping of Training Centers		57	67	52	39	215
B	Training of employees through external training institutions		79	79	79	79	316
C	Human Resource Information System Implementation		20	20	20	20	80
D	Conducting the yard stick study		10	10	10	10	40
E	IT infrastructure to support new initiatives		15	15	15	15	60
F	Improving the working environment		10	10	10	10	40
G	Others etc…						
Total			191	201	186	173	751

The Human Resource Improvement Plan (HRIP) broadly aims to increase the functional capacity of DISCO staff by providing the institutional model for technical and behavioral skills among the company's employees. It also aims to increase the productivity and quality of services provided both internally and externally, creating a foundation for sustainable HR operations. Additional goals and objectives include:

Human-ware:

- Improving PESCO's infrastructure:
  - Starting training and capacity building initiatives

- Improving the recruitment process
- Fulfilling the basic requirement for needs to operate for field staff
- Improving communications with staff
- Identifying a turnaround group

Org-ware:

- Org A&R review and implementation
- Improving office facilities/work environment
- Conducting yardstick study for HR
- Conducting motivational campaigns
- Career planning
- Improving health and educational facilities for employees

Others:

- Streamlined HR procedure and system of internal controls.
- Increased efficiency and effectiveness of the departments.
- Increased knowledge and skills of staff in their functional areas

The current operations and budgets of DISCOs lack a focus towards the improvement of human resource functions and significantly neglect the skill development of employees which often times is a major contributing factor towards the poor overall performance of the organization. Therefore, there is a dire need to improve human resource functions and bring them at par with best practices adopted by utilities worldwide. As a result of DISCOs' operational audits, which identified some interventions that would transform the way these DISCOs operate and bring a paradigm shift in their human resource functions. The HRIP is an optimal fusion of all the activities that would be implemented through the course of five years to revolutionize the business practices adopted by PESCO and ensure the development of its human capital.

The HRIP offers a holistic approach as it not only targets one of the main goals of the organization i.e. increased efficiency but also takes the employees' perspective into consideration through improved facilities/work environment. The HRIP starts with striking the heart of human resource development i.e. training and capacity building of the staff. For this purpose, PESCO will begin the process of adequately funding the proper training function by allocating training and development specific budget at two percent of the operating budget and increasing it by almost one percent per year. To be effective, the trainings must be a continuing process that steadily enhance the technical skills and reinforce safe working practices especially amongst the linemen.

All these efforts will create a synergized effect of improving the human resource functions of the DISCO and making it a more profitable entity.

Staffing Plan:

The staffing plan is an essential component of the HR plan. Appropriate staffing aligned with Business Strategy is a must to ensure smooth implementation of projects, operations, sustainability and achievement of goals. Below is the staffing plan related to IT, Planning, Strategic Planning, commercial, communications, transmission and distribution. The cost of this staffing is reflected in the operational costs are this plan is consistent between the two scenarios developed i.e. is the best and optimally achievable cases.

DIIP 21- Staffing Plan (New Recruitment Plan) for Next Five Years

Induction of New Employees During This Year					
	Posts from BPS-1 to BPS-15		Total Vacant	Total Demanded	Allowed by MoWP
S No.	Nomenclature of Post	BPS			
1	Line Superintendent II	14	288	350	156
2	Meter Reader	9	868	600	220
3	Bill Distributor	7	908	600	530
4	ALM	5	3940	2500	2605
Total			**6004**	**4050**	**3511**

The demand for filling up following posts is in process of getting approval from BoD PESCO and Ministry:

Demand in Pipeline for Approval				
S No.	Nomenclature of Post	BPS	Total Vacant	Total Demanded
1	AM (Accounts)	17	3	3
2	AM (MM)	17	10	7
3	AM (HR)	17	6	3
4	Accounts Assistant	15	135	100
5	Commercial Assistant	15	353	200
6	Senior Store Keeper	15	8	2
7	Assistant	j	364	75
8	Lab Assistant	14	27	7
9	AFM	14	8	6
10	Junior Store Keeper	14	11	5
11	Work Supervisor	11	8	8
12	Senior Clerk	11	119	50
13	Fitter Lineman	9	3	2
14	Junior Clerk (Work)	9	319	150
15	Junior Clerk (Revenue)	9	68	40
16	Machine Attendant	7	16	13
17	Auditor	7	107	70
18	Tracer	7	98	40
19	Driver	7	261	150
20	Security Guard	6	693	200
21	Meter Helper	5	35	20

22	Patwari	5	6	6
23	Store Helper	3	86	60
24	Cook	2	7	5
25	Naib Qasid	1	421	200
26	Sweeper	1	369	200
Total			**3541**	**1622**

Creation of New offices

The detail regarding creation of new sub division, divisions and circles during next five year is given below.

Bifurcation of offices						
Sr.No	Offices	2017-18	2018-19	2019-20	2020-21	2021-22
1	Sub-Division					
2	Division					
3	Circle					

iv. Communications Improvement Plan

This plan covers the communications improvement activities including but not limited to improving the internal communication amongst employees and external communication with customers to improve image of the company etc. Under this section scope of work is provided to be done in each of the five years under this business plan.

DIIP 22- Communication improvement Plan

Communications Plan Items (Illustrations below)		FY-2018-19	FY-2019-20	FY-2020-21	FY-2021-22	FY-2022-23	Total
		Total	Total	Total	Total	Total	Total
A	Improving Internal Communications with Employees		45	45	45	45	180
B	Improving External Communications with Customers		10	10	10	10	40
C	Communication material		2	2	2	2	8
D	Others etc…						
Total			57	57	57	57	228

PESCO often receive negative coverage in the local media due to the absence of active communications and media strategy. Moreover, the basic functions of communications are

undermined with little or no communications budget. The public relations department lacks the resources, manpower and expertise that prevent PESCO from achieving corporate communication standards and creating a positive image among their consumers. The Communications Improvement Plan (CIP) thus, offers a holistic approach because it not only emphasizes the importance of public awareness and image building initiatives for the DISCO but also the internal communication. A part from this, it also focuses on improving the internal communication among staff specially the officer cadre who are involved in the decision making and for the purpose, require immediate access to the information, when and where required.

This plan identified some low cost interventions that would transform the way PESCO operate their PR department. Frequent consumer awareness campaigns and regular interaction with consumers are few of the highly recommended activities targeting educated and well-informed consumers who are bound to play their role in energy conservation and spread positive messages. In addition, PESCO will allocate a clearly defined budget and resources for consumer awareness activities. The CIP is an optimal fusion of all such activities that would be implemented through the course of five years by PESCO to take its communications and outreach further.

Through the initiatives indicated, the CIP aims to improve PESCO's branding with recognition among local communities and consumers and improved understanding among the young generation regarding their role in energy conservation along with improved corporate communication and increase in the usage of email and telephonic communication amongst PESCO's staff.

All these efforts will create a synergized effect of improving the communications function of the DISCO and making it a corporate entity at par with utilities worldwide. Therefore, based the maximum band for the buck, these projects have been chosen.

A. Internal Communication:

Mail Servers:

Before PESCO could take the initiative to improve communication with its external stakeholder such as consumers and the community as a whole, it must ensure that it has achieved the optimum level required in the internal communication among staff. To achieve this objective, PESCO should acquire the basis infrastructure that would help the staff to have affective communication among them. The modes of communication that are needed to be strengthened by PESCO as an organization are electronic communication via email and, telephonic communication over the cell phones.

In order to provide instant access to the information required for the spontaneous decision making and problem solving, PESCO employees in the officer cadre need to have in their possession, at least an email address to communicate within the boundaries of PESCO and a cell phone enabling them to relay their communication outside the premises of their offices. Therefore a mail server is suggested to be deployed within the organization. Scanners will also be installed to ease the email functionality. This will be done right after the communication protocols have been set, user trainings have been imparted and procedures have been finalized; all of which would happen in the first year of Business Plan implementation. In addition, cell phones will also be provided to the officers serving the dual purpose of not only making phone calls but also checking their emails.

Annual Employee Recognition Event:

It is the duty of an organization to appreciate its employees because as a matter of fact, an organization is in existence only because of its employees. Therefore, PESCO will organize an annual function to celebrate its successes and achievement in the last year as well as to recognize the employees that have given PESCO the reasons for celebration through their dedication and hard work. This will not only motivate the employees but will consequently result in creating harmony and mutual understanding among them.

These interventions will ensure that PESCO establish an effective internal communication setup required to run the organization and its operations, in a more efficient manner.

B. Public Communication & Outreach Activities:

PESCO's Public Relations (PR) Departments comprise one PR officer and two clerical staff who dedicate a good portion of their time to issuing rebuttals to inaccurate media reports. The concept of image building and consumer awareness needs improvement. Therefore this plan which actually comprises of a complete portfolio in the realm of Public Communication and Outreach, helping put forward an improved brand image of PESCO, better customer services and better informed customers through a series of outreach campaigns.

1. Mass Media Campaigns

The Public Relations and Customer Services Departments of PESCO will design localized campaigns to target consumers on both energy conservation and the timely payments of bills. These campaigns will help PESCO in its image promotion as a well-run and progressive power distribution company. PESCO staff will be given an opportunity to talk to consumers through radio, TV and newspapers to educate consumers regarding the distribution business of PESCO.

In the long run, these campaigns will result in an improved image of PESCO as a dynamic and customer-friendly entity through external communications that will help to smoothly implement consumer awareness campaigns and will empower the PR Department to deliver assertive communications and outreach on behalf of PESCO.

2. Public Outreach & Awareness Programs

Consumer outreach activities will help build a relationship between PESCO and its consumers. Campaigns targeted at schools and universities, and industries, traders and farmers will be planned in close coordination with the relevant departments of PESCO.

A variety of interventions at schools and colleges will be held including energy conservation seminars, lectures on PESCO's role as a DISCO, debating, essay writing and painting competitions. These will help in the image promotion of PESCO among school- / college-going students. A range of consumer awareness material will be disseminated to improve the knowledge of students on energy conservation and efficiency at both homes and schools.

Industries are important consumers of PESCO therefore targeting industrialists, through seminars at the Chamber of Commerce, will spread energy conservation awareness and the effectiveness of energy audits. Speakers from PESCO will be arranged to speak with industrialists on selected topics e.g. energy conservation, better relationships between PESCO and industries and the need for strengthening cooperation to the mutual benefit of both.
Similarly meetings will be organized with Press Club, to gain its support to spread the message to the masses to adopt energy conservation measures and place PESCO's conservation material in prominent locations.

Farmers, in addition to being important consumers of PESCO, can play a significant role in the conservation of energy through the use of efficient tubewells and legally managing their connections. Improved relationships between farmers and PESCO are the key to discouraging theft and soliciting timely bill payments.

3. Design and printing of Customer Awareness Material

PESCO's corporate image requires steps to be taken for its improvement and to promotion as a DISCO rather than an electricity generation and supply control entity. A localized media campaign will be designed and executed to create awareness among consumers regarding PESCO and energy conservation. Material will include news articles, brochures and leaflets, billboards, pamphlets, local cable advertisements and documentaries. A new corporate tagline (slogan) along with business cards will help introduce a uniform public face of the company at the professional level and will be proposed to PESCO management.

As part of the overall branding campaign, PESCO's Customer Services Centers will be branded through the strategic placement of standees, banners and other awareness material. Brochures, leaflets and handbooks will be developed for employee safety measures and workplace ethics that will help guide Customer Service Center employees. The proposed action plan includes designing content that educates consumers about PESCO's role as a DISCO and the different energy conservation measures they can adopt.

4. Student Energy Conservation Programs

Another important intervention is the energy efficiency and anti-theft campaigns consisting of mass media and Informational and Educational Communication (IEC) materials for dissemination to the public as well as internal communications. These are grassroots-level promotions that target awareness at community level or through schoolchildren and college/university students with action-oriented messages, where benefits of proposed actions are quantitative and clear to the audience. For instance, replacing an incandescent light bulb with an energy saver will help reduce consumption by 50%, resulting in money saving and increased availability of electricity.

5. Radio Talk shows

Talk shows aired through radio are one of the cost effective ways to directly reach the consumers and to tame their minds by talking about the positive developments being carried out by PESCO and showing the positive side of the picture. These talk shows also provide an opportunity to the consumers to take part in the ongoing discussions with the senior officials of PESCO, turn attention

to their complaints, or provide their feedback. PESCO will launch two seasons of the radio talk shows on the leading FM radio channels, one series of 13 episodes will be aired for a quarter in peak summer season focusing on energy conservation, while other series will commence in peak winter season with an emphasis on the anti-theft.

6. Monthly News Letter

Any progressive organization would like to update the society in general and its employees and consumers in particular, in a progressive manner, about the achievement it is making throughout the course of time. Newsletter is an effective matter to get this done. PESCO will publish monthly newsletter that will not only contain the updates about the organization but will also include news, events, articles, consumer feedback and other topics of interest.

Rather than presenting the scope in a table it is narrated and explained below:

A. Internal Communications

For enhancing email internal communication via email, the company will deploy physical IT infrastructure consisting of one Mail Server and associated paraphernalia. In addition, scanners will be provided in all the distinguished offices of PESCO to facilitate email communication. Further, to facilitate swift communication amongst the officers, smart phones will be designated for all the officers enabling them not only to make calls but also to check and respond to the emails on the go.

Apart from investments in the communications technology, PESCO will invest in the human aspect as well by arranging at least one Employee Recognition Event each year. It will be a formal event attended by all the employees of PESCO in which the high-achievers will be acknowledged for their services and successes.

B. External Communications

Public Outreach Office of PESCO will be strengthened by provision of a Toyota Hiace for rapid outdoor mobility of staff for performing outreach activities in the field.

At least four mass media campaigns in a year will be arranged within the territory of PESCO, two campaigns will be based on the theme of anti-theft while two will focus energy conservation. These will include publishing advertisement in leading local newspapers, and relaying the message using the electronic media: TV, Cable and FM Radio. In addition, billboards, pole streamers and similar mediums will also be utilized to spread the message among the consumers.

Apart from these campaigns, public outreach programs and awareness sessions will be arranged at university, community and district levels. It is anticipated that at least four sessions per year at each level will be organized to reciprocate the message.

Printed material is an effective way to penetrate within the masses therefore, consumer awareness material will be designed and printed which includes but not limited to brochures, pamphlets, leaflets, flyers etc. In addition, a newsletters will be also published each month.

v. Linemen Training, Tools and Equipment

PESCO has provided quality tools, vehicles and equipment, and also conducted different trainings of line staff on the latest tools and equipment that are used worldwide to make line work effective and prevent lineman from fatal and severe non-fatal accidents. A hundred purpose-built vehicles have been provided making the line staff able to carry all necessary tools and equipment that are mandatory to perform their job safely.

PESCO's senior and middle managers are also trained so that they can realize the importance of lineman safety in quality work production and elimination of these accidents. The point of consensus has developed in the PESCO due to safety trainings at all levels of management and line staff is "all these accidents are avoidable and can be eliminated". To reach such point, unwavering commitment is required at every level of DISCO to show zero tolerance attitudes on any accident in future. The management can't justify its position by initiating disciplinary actions against SDOs and Supervisors only, but the management has to have allocated good amount of resources in lineman safety.

Currently PESCO have serious dearth in Transport, Tools and Personal Protective Equipment for Linemen. Further PESCO operate its safety through Deputy Manager Safety with two safety inspectors, in one research it is concluded that in a well-run power utility its safety personnel ratio to its employees should be 1/250, whereas PESCO has such ratio 1/4000. To improve such ratio PESCO Safety Organization needs restructuring immediately.

In this business plan PESCO has incorporated such needs in lineman safety with extensive homework and calculations. In this plan, all the needs of Safety Organization restructuring, Trainings and Safety Professional Development Programs for management and line staff, provision of Bucket Mounted Trucks for transport and Ravis for supply complaints handling, communication (mobile phones provision for all LM), Linemen equipment and PPEs have been catered with to make PESCO lineman safe, effective and efficient (that includes miscellaneous gang-tools, individual tools, personal protective equipment are planned to be procured). This plans also includes provision for customized trainings for PESCO's LM.

This plan under safety when executed well save PESCO from huge losses due to poor quality of work and rampant accidents of experienced lineman caused in the shape of heavy financial losses and human loss and it will also improve response to complaint time resulted in improved customer services. Please refer below for details of Tools and Planting scope.

Sr. No.	Description	Unit	Quantities					
			2018-19	2019-20	2020-21	2021-22	2022-23	Total
1	**Vehicles**		22	33	22	Nil	Nil	77
	Sub Total							
2	**Tools & Plants (T&P)**							
	a. Instrument and Test Equipment	Nos						
	b. Special Tools	Nos						

	c. Mechanical Plants (generators, welding plants etc.)	Nos						
	d. LM Tools other than personal protective equipment	Nos						
	e. Clip on Volt-Ohm Meter	Nos	100	120	120	120	120	580
	f. Clip on Power Analyzer	Nos	40	50	50	50	50	240
	g. AC Recording Watt/Var Meter	Nos	20	20	40	40	40	160
	h. Personal Computers with Printers	Nos	60	62	61	60	61	304
	Sub Total		220	252	271	270	271	1284

Section –VI

Costs and Financing Plan

A. Capital Expenditure and additional Operating Costs for Expansion and Rehabilitation (this section also includes the total cost of DIIP)

- **Details of Costing**
  The detailed costs of Transmission, Distribution and functional plans is provided hereunder, with more details Annexed.
- **STG-Expansion and Rehabilitation (Best Case)**

a. Grid Stations

DIIP 25 - STG Expansion and Rehabilitation (Best Case): Grid Stations

Rs. In Million

Sr. No	Description	Total Cost	Total Capacity Added (MVA)	2018-19	2019-20	2020-21	2021-22	2022-23
1	**New**							
a	132 KV	9306	1890	1113	1165	1309	2711	3008
2	**Conversion**							
a	66 to 132 KV	1745	312	256	442	527	270	250
b	33 to 132 KV	132	26	132				
3	**Augmentation**							
a	132 KV	750	125	155	85	170	170	170
b	66 KV	60	13	10	50			
4	**Extension (Transformer)**							
a	132 KV	746	209		366	200	180	
b	66 KV							
5	**Rehabilitation**							
a	132 KV	400			400			
	Total	13079	2575.00	1656	2458	2206	3331	3428

Year	Cost (MRs.)					
	2018-19	2019-20	2020-21	2021-22	2022-23	Total
Projects with Available Finances (Tr-III, Tr-IV) ADB						
New Grid	500					
Conversion	739.54					
T/Line (Total)	320					
Augmentation	200					
Extension	320					
Spare Transformer	193.24					

b. TransmissTansmission Lines (Best Case)

i. New Line

DIIP 26 - STG Expansion and Rehabilitation (Best Case): Transmission Lines (Best Case): New Lines

Rs. In Million

Sr. No.	Description	Total Cost	2018-19	2019-20	2020-21	2021-22	2022-23
1	T/Line D/C	4243	1062	951	1641	446	143
2	T/Line SDT	4034	511	606	1020	544	1353

ii. Rehabilitation/Reconductoring/Up-gradation (Best Case)

DIIP 27 - STG Expansion and Rehabilitation (Best Case): Transmission Lines (Best Case): Rehabilitation/Reconductoring/Up-gradation

Rs. In Million

Sr. No.	Description	Total Cost	2018-19	2019-20	2020-21	2021-22	2022-23
1	132 KV D/C						
2	132 KV SDT						
3.	132 KV Addl: Ckt	305	71		234		

iii. Reconductoring and Rerouting (Best Case)

DIIP 28 - STG Expansion and Rehabilitation (Best Case): Transmission Lines (Best Case): Reconductoring and Rerouting

Rs. In Million

Sr. No.	Description	Total Cost	2018-19	2019-20	2020-21	2021-22	2022-23
1	132 KV D/C	120				120	
2	132 KV SDT						
	Total Cost	8702	1644	1557	2895	1110	1496

iv. Capacitor

DIIP 29 - STG Expansion and Rehabilitation (Best Case): Transmission Lines (Best Case): Capacitor

Nil

Expansion and Rehabilitation (Optimally Achievable Case)

a. Grid Stations

DIIP 30 - Expansion and Rehabilitation (Optimally Achievable Case): Grid Stations

Rs. In Million

Sr. No	Description	Total Cost	Total Capacity (MVA)	2018-19	2019-20	2020-21	2021-22	2022-23
1	New							
a	132 KV	5508	1096	522	1046	1222	1050	1668
2	**Conversion**							
a	66 to 132 KV	1495	312	256	487	215	267	270
b	33 to 132 KV	132	26			132		
3	**Augmentation**							
A	132 KV	750	125	155	85	170	170	170
B	66 KV	60	13	10	50			
4	**Extension (Transformer)**							
A	132 KV	746	209		366	200	180	
B	66 KV							
5	**Rehabilitation**							
A	132 KV	400				400		
B	66 KV							
	Total	9091	1768	943	2034	2339	1667	2108

Year	Cost (MRs.)					
	2018-19	2019-20	2020-21	2021-22	2022-23	Total
Projects with Available Finances (Tr-III, Tr-IV) ADB						
New Grid	500					
Conversion	739.54					
T/Line (Total)	320					
Augmentation	200					
Extension	320					
Spare Transformer	193.24					

b. T/Lines (Optimally Achievable Case)

i. New Line

DIIP 31- Expansion and Rehabilitation (Optimally Achievable Case): Transmission Lines (Optimally Achievable Case): New Line

Rs. In Million

Sr. No.	Description	Total Cost	2018-19	2019-20	2020-21	2021-22	2022-23
1	T/Line D/C	2882	631	973	538	641	99
2	T/Line SDT	2873	230	943	562	724	414

ii. Rehabilitation/Reconductoring/Up-gradation

DIIP 32 - Expansion and Rehabilitation (Optimally Achievable Case): Transmission Lines (Optimally Achievable Case): Rehabilitation/Reconductoring/Up-gradation

Rs. In Million

Sr. No.	Description	Total Cost	2018-19	2019-20	2020-21	2021-22	2022-23
1	132 KV D/C						
2	132 KV SDT						
3	132 KV Addl: Ckt	305.00	71		128	106	

iii. Reconductoring and Rerouting

DIIP 33 - Expansion and Rehabilitation (Optimally Achievable Case): Transmission Lines (Optimally Achievable Case): Reconductoring and Rerouting

Rs. In Million

Sr. No.	Description	Total Cost	2018-19	2019-20	2020-21	2021-22	2022-23
1	132 KV D/C	120.00				120	
2	132 KV SDT						
	Total Cost	6180.00	932.00	1916.00	1228.00	1591.00	513.00

iv. Capacitor

DIIP 34- Expansion and Rehabilitation (Optimally Achievable Case): Transmission Lines (Optimally Achievable Case): Capacitor

Nil

▪ Distribution System-Expansion and Rehabilitation (Best Case)

DIIP35 - Distribution System Expansion and Rehabilitation (Best Case)

Sr. No.	Description	Rs. In Million					
		2018-19	2019-20	2020-21	2021-22	2022-23	Total
Cost of Work for 11 kV and Below Expansion							
A.							
1	**Expansion of HT Lines**						
	New Line	733	977	1026	1100	1100	4936
	Reconductoring	212	282	296	318	318	1425
2	**Transformers**						
	a. 25 KVA	75.2	244.6	244.6	287.6	376.2	1228.2
	b. 50 KVA	78.3	261	287.1	350.2	365.3	1341.9
	c. 100 KVA	46.4	63.3	67.5	71.7	81	330
	d. 200 KVA	7.8	15.7	18.3	31.4	31.4	104.7
	e. others KVA						
	Sub Total	207.8	584.5	617.4	741	854	3004.8
3	**11 KV Capacitors**						
	a. Fixed 450 KVAR	2	3	3	3	3	14
	b. Fixed 900 KVAR						
	c. Others						

	Sub Total	2	3	3	3	3	14
4	**11 KV Panels**	34	45	48	51	51	229
5	**11 kV 500 MCM Cable**	32	43	45	48	48	215
Cost of Work for LT Expansion							
B.							
1	**New LT Lines**						
	Number of proposals	207.8	584.5	617.4	741	854	3004.8
	Length of new LT line	299.813	901.255	943.047	1126.932	1327.171	4598.218
2	**LT Capacitors**						
	a. Different KVARs						
3	**Other Equipments and Material**						
	a. Single Phase Meters	96.65	91.70	91.70	87.11	87.11	454.28
	b. Three Phase Meters	115.60	78.35	78.35	83.68	83.68	439.66
	c. MDI	7.50	3.00	3.00	4.50	4.50	22.50
	Sub Total	219.75	173.05	17.05	175.29	175.29	916.44
Cost of Cost Deposit Work							
C.	**Village Electrification**						
1	**New HT Lines**						
	Length of new HT line (km)	848.8	891.3	935.8	982.6	1031.8	4690.3
2	**New LT Lines**						
	Length of new LT line (km)	1127	1183.3	1242.5	1304.6	1369.8	6227.2
3	**Transformers**						
	a. 25 KVA	86.5	90.9	95.6	100.5	105.5	478.9
	b. 50 KVA	549.1	576.7	605.7	636.2	668.1	3035.7
	c. 100 KVA	199.2	209.3	219.9	231.3	243.1	1102.8
	d. 200 KVA	40.8	42.9	45.5	48.1	50.8	228.2
	e. others KVA						
	Sub Total	875.6	919.8	966.7	1016.1	1067.4	4845.6
D.	**Independent Feeder**						
1	**New HT Lines**						
	Length of new HT line	83.7	63.8	71.4	74.4	77.5	370.8
2	**New LT Lines**						
	Length of new LT line						
3	**Transformers**						
	a. 25 KVA						

	b. 50 KVA						
	c. 100 KVA	144.8	70.9	63.3	41.4	63.3	383.6
	d. 200 KVA	59.7	29.3	26.2	17.3	26.2	158.6
	e. others KVA						
	Sub Total	204.4	100.2	89.5	58.6	89.5	542.2
4	**11 KV Panel**						

Cost of Work for 11 kV and Below Rehabilitation		Rs. In Million					
A.		2018-19	2019-20	2020-21	2021-22	2022-23	Total
1	**Rehabilitation of HT Lines**						
	Number of proposals	1002.91	1136.63	1337.21	1404.07	1404.07	6284.89
	New Line	733	831	977	1026	1026	4594
	Reconductoring	212	240	282	296	296	1327
	Re-routing						
2	**New Transformers**						
	a. 25 KVA	75.2	244.6	244.6	287.6	376.2	1228.2
	b. 50 KVA	78.3	261	287.1	350.2	365.3	1341.9
	c. 100 KVA	46.4	63.3	67.5	71.7	81	330
	d. 200 KVA	7.8	15.7	18.3	31.4	31.4	104.7
	e. others KVA						
	Sub Total	207.8	584.5	617.4	741	854	3004.8
3	**Installation of 11 kV Panels**	34	39	45	48	48	213
4	**11kV 500 MCM Cable (km)**	32	36	43	45	45	201
Cost of Work for LT Rehabilitation							
B.							
1	**LT Lines Rehabilitation**						
	New LT Line	131.079	394.032	412.303	492.698	580.243	2010.355
	Reconductoring of LT Line	42.762	128.545	134.506	160.734	189.293	655.840
2	**Other Equipment's and Material**						

	a. Single Phase Meters	10.087	44.393	42.375	40.357	38.340	175.552
	b. Three Phase Meters	3.40	17.0	20.40	22.10	23.80	86.70
	Sub Total	13.487	61.393	62.775	62.457	62.140	262.252

Cost of Electrification works in chitral (Best Case)

S.NO	DESCRIPTION	UM	QTY	RATE	TOTAL
1	H.T STRUCTURE 45' LONG	NO	105	64500	6772500
2	H.T STRUCTURE 36' LONG	NO	6120	28500	174420000
3	L.T. STRUCTURE 30' LONG	NO	10010	17900	179179000
4	ACSR DOG	MTR	707586	109	77126874
5	ACSR RABBIT	MTR	669545	56	37494520
6	AAC WASP	MTR	19936	79	1574944
7	AAC ANT	MTR	2681280	49	131382720
8	25 KVA TRANSFORMER	NO	68	130000	8840000
9	50 KVA TRANSFORMER	NO	200	202642	40528400
10	100 KVA TRANSFORMER	NO	37	340000	12580000
11	STEEL CROSS ARM / D-FITTING	NO	342	1940	663480
12	STEEL CROSS ARM WITH BRACES	NO	12450	3040	37848000
13	PIN INSULATOR	NO	37350	240	8964000
14	PIN FOR STEEL CROSS ARM	NO	37350	344	12848400
15	DISC INSULATOR	NO	9348	1050	9815400
16	DEAD END CLAMP FOR DOG/RABBIT	NO	9348	157	1467636
17	SPOOL INSULATOR (LT)	NO	42388	45	1907460
18	D-SHACKLE ASSEMBALY	NO	42388	113	4789844
19	PLATE FORM (SINGLE STRUCTURE)	NO	268	5500	1474000
20	PLATE FORM (DOUBLE STRUCTURE)	NO	37	9240	341880
21	ENY NUT	NO	9348	75	701100
22	EARTH UNIT WITH THIMBLE 10'	NO	16844	529	8910476
23	STAY ROD WITH ELBOW AND THIMBLE	NO	9701	1450	14066450
24	GALVENISED STEEL WIRE 10 MM	KG	265380	114	30253320
25	DROP OUT CUT OUT	NO	915	5300	4849500
26	PVC 19/0.83 4/CORE	MTR	4680	390	1825200
27	P.G CONNECTOR T-110	NO	2408	97	233576
28	P.G CONNECTOR T-150	NO	9348	108	1009584
29	DOUBLE ARMING BOLT 5/8" x 14"	NO	24900	130	3237000
30	DOUBLE ARMING BOLT 5/8" x 20"	NO	1014	169	171366
31	BOLT & NUT 5/8" x 2"	NO	79014	23	1817322
32	BOLT & NUT 5/8" x 10"	NO	6120	73	446760
33	BOLT & NUT 5/8" x 14"	NO	12450	85	1058250
34	WASHER ROUND 1" x 7/16"	NO	97584	17	1658928
35	STAY STRIP / CLAMP	NO	9701	100	970100

36	500 MCM S/CORE	MTR	1800	794	1429200
37	11 KV PANEL	MTR	6	1500000	9000000
38	IN DOOR KIT	NO	18	4700	84600
39	OUT DOOR KIT	NO	18	6900	124200

Distribution System- Expansion and Rehabilitation (Optimally Achievable Case)

DIIP36 - Distribution System Expansion and Rehabilitation (Optimally Achievable Case)

Sr. No.	Description	Rs. In Millions					
		2018-19	2019-20	2020-21	2021-22	2022-23	Total
Cost of Work for 11 kV and Below Expansion							
A.							
1	**Expansion of HT Line**						
	Number of proposals	40	40	31	32	33	176
	Length of new HT line	977	977	757	782	806	4300
	Reconductoring	282	282	219	226	233	1242
2	**Transformers**						
	a. 25 KVA	13.2	13.2	18.8	20.7	22.6	88.42
	b. 50 KVA	65.2	39.1	41.8	44.4	47	237.47
	c. 100 KVA	63.3	42.2	46.4	50.6	54.9	257.44
	d. 200 KVA	36.6	16.7	20.9	26.2	31.4	131.88
	e. others KVA						
	Sub Total	178.3	111.3	127.9	141.9	155.8	715.2
3	**11 KV Capacitors**						
	a. Fixed 450 KVAR	3	3	2	2	2	12
	b. Fixed 900 KVAR						
	c. Others						
	Sub Total	3	3	2	2	2	12
4	**11 KV Panel**	45	45	35	36	37	200
5	**11kV 500 MCM Cable**	43	43	33	34	35	187
Cost of Work for LT Expansion							
B.							
1	**New LT Lines**						
	No. of proposals	178.3	111.3	127.9	141.9	155.8	715.2
	Length of new LT line (Total Wasp+ANT)	196.241	127.92	148.998	163.534	178.071	814.76

2	**LT Capacitors**							
	a. Different KVARs							
3	**Other Equipments and Material**							
	a. Single Phase Meters	12.838		12.838	13.755	14.214	14.672	68.32
	b. Three Phase Meters	1.70		1.870	2.040	2.210	2.380	10.20
	c. MDI	3.0		3.750	3.750	4.50	5.250	20.25
	Sub Total	17.538		18.458	19.545	20.924	22.302	98.77
Cost of Cost Deposit Work								
C.	**Village Electrification**							
1	**New HT Lines**							
	Length of new HT line	373.9		0.0	202.6	214.9	315.2	1106.6
2	**New LT Lines**							
	Length of new LT line	201		0.0	110.4	122	159.7	593
3	**Transformers**							
	a. 25 KVA	9.4		0.0	6.6	7.9	9.0	33
	b. 50 KVA		39.1	0.0	19.6	23.5	26.1	108
	c. 100 KVA		16.9	0.0	8.9	9.7	14.8	50
	d. 200 KVA		13.1	0.0	7.8	8.9	13.1	43
	e. others KVA							
	Sub Total		78.5	0.0	42.9	50.0	63.0	234
D.	**Independent Feeder**							
1	**New HT Lines**							
	Length of new HT line	Km	60.5	0.0	59.9	59.2	24.9	205
2	**New LT Lines**							
	Length of new LT line	Km						
3	**Transformers**							
	a. 25 KVA	Nos						
	b. 50 KVA	Nos						
	c. 100 KVA	Nos	14.8	0.0	14.8	14.8	4.2	48.6
	d. 200 KVA	Nos	6.1	0.0	6.8	6.8	1.6	21.3
	e. others KVA	Nos						
	Sub Total		20.9	0.0	21.6	21.6	5.8	69.9
4	**11 KV Panel**	Nos	25.0	0.0	26.1	26.1	7.9	85.1

Cost of Work for 11 kV and Below Rehabilitation (Rs. In Millions)							
A.		Rs. In Millions					
1	**Rehabilitation of HT Lines**	2018-19	2019-20	2020-21	2021-22	2022-23	Total
	Number of proposals	32	19	30	28	28	137
	Bifurcation	1069.77	635.18	1002.91	936.05	888.49	4532
	Reconductoring	226	134	212	198	198	967
	Re-routing						
2	**New Transformers**						
	a. 25 KVA	0.6	15.0	25.4	26.3	30.1	97.4
	b. 50 KVA	67.3	83.5	92.6	93.9	91.3	428.8
	c. 100 KVA	113.1	101.3	116.1	118.2	122.4	571.0
	d. 200 KVA	36.1	41.9	47.1	41.9	47.1	214.0
	e. others KVA						
	Sub Total	217.1	241.7	281.2	280.3	290.9	1311.3
3	**Installation of 11 kV Panels**	36	22	34	32	30	154
4	**11kV 500 MCM Cable**	34	20	32	30	30	146
Cost of Work for LT Rehabilitation							
B.							
1	**LT Lines Rehabilitation**						
	New LT Line	78.39	94.38	112.08	112.73	116.66	514.25
	Reconductoring of LT Line	20.81	25.05	29.75	29.92	30.97	136.52
2	**Other Equipment's and Material**						
	a. Single Phase Meters	7.33	11.004	11.92	12.38	12.83	55.47
	b. Three Phase Meters	1.36	2.04	2.21	2.21	2.21	10.03
	Sub Total	8.69	13.04	14.13	14.59	15.048	65.50

Cost for Installation of ABC Cable: (Optimally Achievable Case)

Sr. No	Circle	Division	No. of Feeders	Amount Required for ABC Cable @0.75 (Million)
1	PESHAWAR	City Rural	5	143.12
		Charsadda	8	344.76
		Shabqadar	6	113.71
		Rural	9	115.07
2	BANNU	Bannu-1	13	280.47
		Lakki	8	247.06
		Tank	2	17.69
		Bannu-2	8	523.12
3	Khyber	Khyber	16	465.53
TOTAL			75	2250.5

Cost for Electrification works in Chitral (Optimally Achievable Case)

S.NO	DESCRIPTION	UM	QTY	RATE	TOTAL
1	H.T STRUCTURE 45' LONG	NO	105	64500	6772500
2	H.T STRUCTURE 36' LONG	NO	6120	28500	174420000
3	L.T. STRUCTURE 30' LONG	NO	10010	17900	179179000
4	ACSR DOG	MTR	707586	109	77126874
5	ACSR RABBIT	MTR	669545	56	37494520
6	AAC WASP	MTR	19936	79	1574944
7	AAC ANT	MTR	2681280	49	131382720
8	25 KVA TRANSFORMER	NO	68	130000	8840000
9	50 KVA TRANSFORMER	NO	200	202642	40528400
10	100 KVA TRANSFORMER	NO	37	340000	12580000
11	STEEL CROSS ARM / D-FITTING	NO	342	1940	663480
12	STEEL CROSS ARM WITH BRACES	NO	12450	3040	37848000
13	PIN INSULATOR	NO	37350	240	8964000
14	PIN FOR STEEL CROSS ARM	NO	37350	344	12848400
15	DISC INSULATOR	NO	9348	1050	9815400
16	DEAD END CLAMP FOR DOG/RABBIT	NO	9348	157	1467636
17	SPOOL INSULATOR (LT)	NO	42388	45	1907460
18	D-SHACKLE ASSEMBALY	NO	42388	113	4789844
19	PLATE FORM (SINGLE STRUCTURE)	NO	268	5500	1474000
20	PLATE FORM (DOUBLE STRUCTURE)	NO	37	9240	341880
21	ENY NUT	NO	9348	75	701100

22	EARTH UNIT WITH THIMBLE 10'	NO	16844	529	8910476
23	STAY ROD WITH ELBOW AND THIMBLE	NO	9701	1450	14066450
24	GALVENISED STEEL WIRE 10 MM	KG	265380	114	30253320
25	DROP OUT CUT OUT	NO	915	5300	4849500
26	PVC 19/0.83 4/CORE	MTR	4680	390	1825200
27	P.G CONNECTOR T-110	NO	2408	97	233576
28	P.G CONNECTOR T-150	NO	9348	108	1009584
29	DOUBLE ARMING BOLT 5/8" x 14"	NO	24900	130	3237000
30	DOUBLE ARMING BOLT 5/8" x 20"	NO	1014	169	171366
31	BOLT & NUT 5/8" x 2"	NO	79014	23	1817322
32	BOLT & NUT 5/8" x 10"	NO	6120	73	446760
33	BOLT & NUT 5/8" x 14"	NO	12450	85	1058250
34	WASHER ROUND 1" x 7/16"	NO	97584	17	1658928
35	STAY STRIP / CLAMP	NO	9701	100	970100
36	500 MCM S/CORE	MTR	1800	794	1429200
37	11 KV PANEL	MTR	6	1500000	9000000
38	IN DOOR KIT	NO	18	4700	84600
39	OUT DOOR KIT	NO	18	6900	124200

Cost for GIS Mapping and P&E:

Sr. No.	Description	Rs. In Million						
			2018-19	2019-20	2020-21	2021-22	2022-23	Total
GIS Mapping								
1	HT Mapping							
	Number of 11 kV Feeders		2	2	2	2	3	11
	Length of HT Lines mapped							
2	LT Mapping							
	Number ofLT Lines		6	6	6	6	6	30
	Length of LT Lines mapped							
3	Tools Required							
	GIS Mapping Software Licenses (2M Lumpsum)		40					40
	Plotters		0.84					0.84
	Computers		1.35					1.35
	GPS devices		0					3
4	Total Cost		50.19	8	8	8	9	86.19

Sr. No.	Description	Rs. In Million						
			2018-19	2019-20	2020-21	2021-22	2022-23	Total
Study Based Planning using GIS Maps with Modern Planning Tools - Transition Plan								
1	Tools Required							
	Simulation Software Licenses		40					

B. Capital Expenditure and Additional Operating Costs for Other Functional Improvement Plans:

Summary of Capital and Operational Expenditure Costs

Please note that the Scope and Cost of Functional Plans is same for both the scenarios.

DIIP37 - Summary of Capital and Operational Expenditure Costs

Items		FY-2018-19	FY-2019-20	FY-2020-21	FY-2021-22	FY-2022-23	Total
		Total	Total	Total	Total	Total	Total
A	Commercial Improvement Plan	0	777	827	827	827	3258
B	Financial Improvement Plan	0	50				50
C	HR Improvement Plan	0	191	201	186	173	751
D	Communications Improvement Plan	0	57	57	57	57	228
Subtotal: (A+B+C+D)		0	1075	1085	1070	1057	4287
Escalation @ 7.9%		0	1160	1171	1155	1141	4626
Contingencies: @3%		0	1195	1206	1189	1175	4764
Total		**0**	**1195**	**1206**	**1189**	**1175**	**4764**

DIIP 39-Costing of Commercial Improvement Plan

Commercial Improvement Plan Items (Illustrations below)		FY-2018-19	FY-2019-20	FY-2020-21	FY-2021-22	FY-2022-23	Total
		Total	Total	Total	Total	Total	Total
A	AMR Metering	0	150	150	150	150	600
B	Electronic Metering	0	60	60	60	60	240
C	New CIS system	0	120	120	120	120	480
D	HHUs for meter reading	0	5	5	5	5	20
E	Consumer Census	0	0	50	50	50	150
F	Anti-theft efforts	0	440	440	440	440	1760
G	IT infrastructure to support new initiatives	0	2	2	2	2	8
F	Others etc…	**0**					
Total		0	777	827	827	827	3258

DIIP 40 -Costing of Financial Management Improvement Plan

Financial Improvement Plan Items (Illustrations below)		FY-2018-19	FY-2019-20	FY-2020-21	FY-2021-22	FY-2022-23	Total
		Total	Total	Total	Total	Total	Total
A	ERP system implementation						

B	Revamping the Internal Audit		50				50
C	Other studies and models preparation						
G	IT infrastructure to support new initiatives						
F	Others etc…						
Total			50				50

DIIP 41- Costing of Human Resource Improvement Plan

HR Improvement Plan Items (Illustrations below)		FY-2018-19	FY-2019-20	FY-2020-21	FY-2021-22	FY-2022-23	Total
		Total	Total	Total	Total	Total	Total
A	Revamping of Training Centers		57	67	52	39	215
B	Training of employees through external training institutions		79	79	79	79	316
C	Human Resource Information System Implementation		20	20	20	20	80
D	Conducting the yard stick study		10	10	10	10	40
E	IT infrastructure to support new initiatives		15	15	15	15	60
F	Improving the working environment		10	10	10	10	40
G	Others etc…						
Total			191	201	186	173	751

DIIP 42 Costing of Communications Improvement Plan

Communications Plan Items (Illustrations below)		FY-2018-19	FY-2019-20	FY-2020-21	FY-2021-22	FY-2022-23	Total
		Total	Total	Total	Total	Total	Total
A	Improving Internal Communications with Employees		45	45	45	45	180

B	Improving External Communications with Customers		10	10	10	10	40
C	Communication material		2	2	2	2	8
D	Others etc…						
Total			57	57	57	57	228

C. Summary Costs for the Integrated Investment Plan

Summary of Cost for Best Case

DIIP43- Summary Costs for the Investment Plan: Summary of Cost for Best Case

Business Plan- DIIP PESCO (TOTAL COST OF BEST CASE)						
DESCRIPTION	2018-19	2019-20	2020-21	2021-22	2022-23	TOTAL
Distribution cost without deposit	5030	8411	9004	10053	10940	43438
ABC Cable Installation		350	1900			2250
Electrification in Chitral		150	350	452	607	1559
Transmission cost without ADB	3300	4015	5101	4441	4924	21781
Total Cost	8330	12926	16355	14946	16471	69028

DESCRIPTION	2018-19	2019-20	2020-21	2021-22	2022-23	TOTAL
Distribution deposit cost	4237	4281	4512	4701	5004	22735
Transmission ADB cost	2272.78					2272.78
Total Cost	6510	4281	4512	4701	5004	25008

Summary of Cost for Optimally Achievable Case

DIIP44- Summary Costs for the Investment Plan: Summary of Cost for Optimally Achievable Case

Business Plan- DIIP PESCO (TOTAL COST OF ACHIEVABLE CASE)						
DESCRIPTION	2018-19	2019-20	2020-21	2021-22	2022-23	TOTAL
Distribution cost without deposit	5005	4000	4136	4153	4156	21445
ABC Cable Installation		350	1900			2250
Electrification in Chitral		150	350	452	607	1559
Transmission cost without ADB	1875	3950	3567	3258	2621	15271
Total Cost	6880	8450	9953	7863	7384	40525

DESCRIPTION	2018-19	2019-20	2020-21	2021-22	2022-23	TOTAL
Distribution deposit cost	1046.4	0.0	677.5	729.9	771.3	4379.5
Transmission ADB cost	3081					2272.78
Total Cost	4127.4	0.0	678	730	771	6652.

Summary of O&M Costs

DIIP45- Summary Costs for the Investment Plan: Summary of O&M Costs

O&M COST (BEST CASE)						
DESCRIPTION	2018-19	2019-20	2020-21	2021-22	2022-23	TOTAL
Distribution O&M cost	302	505	540	603	657	2607
Transmission O&M cosT	66	80	102	89	98	436
Distribution deposit O&M cost	254	257	271	282	300	1364
Transmission ADB O&M cost	45					45
Total O&M Cost	667.75	842.2	912.82	973.82	1055.78	4452.37

O&M COST (ACHIEVABLE CASE)						
DESCRIPTION	2018-19	2019-20	2020-21	2021-22	2022-23	TOTAL
Distribution O&M cost	300	240	248	249	249	1286
Transmission O&M cosT	38	79	71	65	52	305
Distribution deposit O&M cost	63		41	44	46	194
Transmission ADB O&M cost	45					45
Total O&M Cost	446	319	360	358	347	1830

D. Financing Plan:

DIIP 46- Financing Plan

PESCO Investment Plan						
						Rs. in mln
GROSS	2017-18	2018-19	2019-20	2020-21	2021-22	2022-23
DOP	2,931	2,925	2,500	2,500	2,500	2,500
RE	1,500	-	-	678	730	771
ELR	964	1,500	1,500	1,636	1,653	1,656
GSC + Capacitors				736	-	-
STG	1,459	3,500	3,500	2,400		

Other	3,757	3,082	950	2,681	3,710	3228
Total investment	**11,347**	**11,007**	**8,450**	**10,631**	**8,593**	**8,155**
NET						
DOP	500	500	1,500	1,500	700	805
RE	-	-	-	-	-	-
ELR	964	1,500	1,500	1,900	1,900	1,900
GSC	1,130	-	-	-	-	-
STG	2,660	3,500	3,500	2,400	1,000	1,000
other	2,162	1,380				
Net Total investment	**7,416**	**6,880**	**6,500**	**5,800**	**3,600**	**3,705**
PUBLIC FINANCE						
DOP	2,431	2,425	1,000	2,988	3,788	3,683
RE	1500	-	-	750	750	1,000
ELR						
GSC						
STG						
TOTAL	**3,931**	**2,425**	**1,000**	**3,738**	**4,538**	**4,683**

Section - VII

Benefits and Financial Analysis

A. Expansion and Rehabilitation of Secondary Transmission and Distribution System:

i. Tangible Benefits

Additional Energy Available for Sales (for Transmission)				
Year	Best		Achievable	
	MVA Added	Additional Energy for Sales (MKWH)	MVA Added	Additional Energy for Sales (MKWH)
2018-2019	333.50	1365.78	189.50	776.06
2019-2020	436.50	1787.60	308.50	1263.40
2020-2021	457.00	1871.55	457.00	1871.55
2021-2022	666.00	2727.47	406.00	1662.69
2022-2023	682.00	2792.99	420.00	1720.03

Transmission - Loss Reduction				
Year	MW		MWKh	
	Ideal	Realistic	Ideal	Realistic
2018-2019	20.50	17.20	98.77	82.87
2019-2020	12.70	14.40	61.19	69.38
2020-2021	15.90	12.70	76.61	61.19
2021-2022	9.70	10.22	46.73	49.24
2022-2023	7.00	5.00	33.73	24.09

Distribution - Loss Reduction						
Year	HT Rehab+Chitral		LT Rehab+ABC		Total	
	Units MKWh		Units MKWh		Units MKWh	
	Ideal	Realistic	Ideal	Realistic	Ideal	Realistic
2018-2019	43.8	58.4	16.5	11.96	60.3	70.36
2019-2020	71	62.2	142.6	107.4	213.6	169.6
2020-2021	79.8	65.2	458.9	424.1	538.7	489.3
2021-2022	82.7	62.2	62	17.2	144.7	79.4
2022-2023	82.7	62.2	73	17.8	155.7	80

ii. **Non-tangible Benefits**

The other benefits like improvement in voltage profile, improving the overloading of the network will be achieved after completion of project.

iii. **Financial Analysis for the entire Transmission and Distribution Investments**

- Internal financial rate of return (IFRR) comes out to be 29.65%

iv. **Sensitivity Analysis**

The IFRR for the following scenarios are placed a

- Increasing costs by 10%. IFRR comes out to be 26.81%
- Decreasing benefits by 10%,IFRR comes out to be 26.52%
- Increasing costs and decreasing benefits by 10% each, IFRR comes out to be 23.92%
- Increasing cost by 25%,IFRR comes out to be 23.33%

Section - VIII
Financial Projections for FY 2018 to FY2022

Please find below the profit and loss account, balance sheet and cash flow of PESCO for tariff control period i.e FY 2018- FY 2022:

PESHAWAR ELECTRIC SUPPLY COMPANY

Rs. In Milli

Financial Statements

INCOME STATEMENT	Audited	Prov'nal	Projected	Projected	Projected	Projected
	2017-18	2018-19	2019-20	2020-21	2021-22	2022-23
QUANTITATIVE DATA						
NO. OF CUSTOMERS (Million)	3.29	3.42	3.55	3.65	3.55	3.55
Growth in No. of customers(%)	3.79	3.95	3.80	2.82		
UNITS SOLD (Mill. kWh)	8,795	9,074	9,201	9,978	10,277	10,585
UNITS PURCHASED (Mill kWh)	14,209	14,427	14,491	14,356	14,681	15,014
UNITS LOST / DISTRIBUTION LOSSES (Mill. kWh)	5,414	5,354	5,290	4,378	4,404	4,429
UNITS LOST / DISTRIBUTION LOSSES (% Age) *	38.10%	37.11%	36.51%	30.50%	30.00%	29.50%
Company TARIFF (Rs./kWh)	13.88	18.30	20.89	15.73	15.95	16.10
Consumer Tariff	9.93	12.60	13.50	11.97	12.19	12.34
PURCHASE PRICE (Rs./kWh)	10.06	11.49	11.48	8.30	8.40	8.50
INCOME STATEMENT						
SALES						
Sale of Power	87,312	114,354	124,207	119,437	125,277	130,619
Rental & Service income	44	51	59	67	78	89
Total Sales	87,357	114,405	124,265	119,504	125,354	130,708
Subsidy	34,745	51,672	68,029	37,517	38,642	39,800
Amortization of deferred Credit.	1,490	1,546	1,666	1,797	1,956	2,111
	123,591	167,623	193,960	158,818	165,952	172,619
Purchase of Power	142,941	165,698	166,424	119,155	123,320	127,619
Gross Profit	(19,350)	1,925	27,536	39,664	42,631	45,000
OPERATING EXPENSESS						
Establishment Cost	16,288	20,962	22,968	26,838	30,187	33,929
Maintenance & repair and Others	647	1,016	1,150	1,150	1,160	1,180
Depreciation	2,644	3,073	3,380	4,199	4,172	4,572
Provision for Bad Debt	4,511	5,979	6,200	6,037	6,188	6,330
Total Operating Expenses	24,090	31,030	33,698	38,224	41,707	46,010
OPERATING PROFIT / (LOSS)	(43,440)	(29,105)	(6,162)	1,439	924	(1,011)
ADD: Other Income	4,952	5,268	4,475	5,202	5,463	5,736
EBIT	(38,488)	(23,837)	(1,687)	6,642	6,387	4,725
LESS: Interest Expense	3,400	4,758	5,500	1,900	1,700	1,500
PROFIT / (LOSS) BEFORE TAX	(41,888)	(28,595)	(7,187)	4,742	4,687	3,225
Income Tax/Turnover tax	1,184	1,424	1,500	1,470	1,453	1,000
NET PROFIT/LOSS FOR THE YEAR	(43,072)	(30,019)	(8,687)	3,272	3,234	2,225

Financial Statements

Rs. In Million

Balance Sheet	Audited	Prov'nal	Projected	Projected	Projected	Projected
Assets	2017-18	2018-19	2019-20	2020-21	2021-22	2022-23
Fixed Assets						
Gross Fixed Assets	76,826	85,081	93,414	100,568	107,996	115,425
LESS: Accumulated Depreciation	26,448	29,522	32,902	36,674	40,848	46,338
Net Fixed Assets	**50,378**	**55,559**	**60,513**	**63,893**	**67,148**	**69,087**
				1040.561298		
Capital Work in Progress	**17,573**	**20,325**	**23,102**	**25,487**	**27,646**	**29,806**
Long Term Advances, Deposit	**19**	**19**	**20**	**21**	**23**	**24**
Current Assets						
Inventory / Stores & Spares	3,186	4,174	4,181	4,469	5,688	5,934
Account Receivable	125,836	127,976	140,320	158,135	178,895	191,271
Less: Provision for Bad Debt	64,838	70,817	77,015	83,052	89,241	95,570
Net Accounts Receivable	60,998	57,159	63,304	75,082	89,655	95,700
Receivable from Associated Companies	1,424	1,281	1,153	1,038	934	841
Receivable from TESCO	35,457	34,748	33,010	31,360	28,224	25,401
Advances, Deposits, Prepay. & Other Rec.	79,071	83,024	84,685	86,379	88,106	80,177
Cash & Bank Balances	5,156	4,300	4,785	3,959	2,462	1,874
Total Current Assets	**185,292**	**184,686**	**191,118**	**202,287**	**215,068**	**209,927**
TOTAL ASSETS	**253,263**	**260,590**	**274,755**	**291,689**	**309,885**	**308,844**
Liabilities & Equity						
Shareholders' Equity	18,082	18,082	18,082	18,082	18,082	18,082
Retained Earnings	(245,833)	(275,852)	(284,538)	(281,267)	(278,033)	(275,807)
Total Equity	**(227,751)**	**(257,770)**	**(266,456)**	**(263,185)**	**(259,951)**	**(257,725)**
Long Term / Deferred Liabilities						
ADB Loans/PHP Loan	7,112	7,383	7,383	7,383	7,383	7,383
Liability against govt.loan	64,123	64,123	64,123	64,123	64,123	64,123
Deferred Credits (Consumer's Capital Cont. etc.)	29,869	31,323	33,095	35,036	37,618	39,940
Employees Retirement Benefits	68,958	70,299	71,679	73,101	74,566	76,075
Total Long Term / Deferred Liability	**170,063**	**173,129**	**176,281**	**179,644**	**183,691**	**187,522**
Payable to CPPA for Supplies-Plan deficit	221,710	264,483	288,025	293,005	300,440	290,757
Payable to Associated Companies	573	602	632	663	696	731
Creditors, Accrued & Other Liabilities	88,668	80,148	76,273	81,561	85,008	87,559
Total current Liabilities	**310,951**	**345,232**	**364,930**	**375,230**	**386,145**	**379,047**
TOTAL LIABILITIES AND EQUITY	253,263	260,590	274,754	291,689	309,885	308,843

Rs. In Milli

Financial Statements

CASH FLOW STATEMENT	Audited	Prov'nal	Projected	Projected	Projected	Projected
CASHFLOW FROM OPERATING ACTIVITIES	2017-2018	2018-2019	2019-2020	2020-2021	2021-2022	2022-2023
Net Profit (loss) for the Period after tax	(43,072)	(30,019)	(8,687)	3,272	3,234	2,225
Adjustments:						
ADD: Depreciation	2,644	3,073	3,380	4,199	4,172	4,572
Amortisation of Deferred Income	(1,490)	(1,546)	(1,666)	(1,797)	(1,956)	(2,111)
Provision for Bad Debts	4,511	5,979	6,200	6,037	6,188	6,330
Intrest Income	(915)	0	0	443	0	178
Provision for Ret. Benefits	5,411	5,573	5,740	5,912	6,090	6,272
Interest Expense	3,400	4,758	5,500	1,900	1,700	1,500
Cash Flow from Operations	(29,511)	(12,182)	10,467	19,967	19,430	18,969
Working Capital Changes						
(Increase)/Decrease in Debtors	(12,799)	(2,140)	(12,344)	(17,815)	(20,761)	(12,375)
(Increase)/Decrease in Inventories	333	(987)	(7)	(288)	(1,219)	(246)
(Increase)/Decrease in Advances, Deposit.etc	22,711	(3,102)	205	72	1,512	10,845
Increase/(Decrease) in Creditors,accrued and other liabilities	36,536	34,281	19,698	10,301	10,915	(7,098)
	46,781	28,052	7,552	(7,731)	(9,552)	(8,874)
Payment for Ret. Benefits	(4,109)	(4,232)	(4,359)	(4,490)	(4,625)	(4,764)
Cash Flow from Operating Activities	13,160	11,638	13,659	7,746	5,252	5,332
Cash Generated From Operation						
Financial Charges Paid	(3,400)	(4,758)	(5,500)	(1,900)	(1,700)	(1,500)
Interest Received	795	0		(869)	3	740
Capital Reciepts -Deferred Credit	5,168	3,000	3,438	3,738	4,538	4,433
Net Cash flow From Operating activities	15,724	9,880	11,597	8,714	8,094	9,005
CASH FROM INVESTING ACTIVITIES:						
Fixed Assets Acquired	(10,144)	(8,254)	(8,334)	(7,154)	(7,429)	(7,429)
Capital Work in Progress	(1,203)	(2,752)	(2,778)	(2,385)	(2,160)	(2,160)
Long Term Advances	32	(1)	(1)	(1)	(1)	(1)
Cash In/(Out) flow from Investing Activities	(11,316)	(11,007)	(11,112)	(9,540)	(9,591)	(9,592)
CASH FROM FINANCING ACTIVITIES						
NEW LOAN ADB(ERRA)	(2,887)	271	0	0	0	0
Cash In/(Out) flow from Financing Activities	(2,887)	271	0	0	0	0
Net Cashflow During the Year	1,521	(856)	485	(826)	(1,498)	(587)
Cash - Start of the Year	3,636	5,156	4,300	4,785	3,959	2,462
Cash - End of the Year	5,156	4,300	4,785	3,959	2,462	1,874

Section - IX

Investment Plan Implementation

Business Planning Organization for Preparation of Investment Plans

The stewardship responsibility of the Board of Directors (the Board) is to have an oversight role over the management of the DISCO, which is responsible for the day-to-day conduct of the business. The Board must assess and ensure systems are in place to identify and manage the risks of the Company's business with the underline objective of preserving Company's assets and steering it in a strategic direction that ensures fulfilling its objectives. The Board, through the Chief Executive Officer (CEO), sets the attitude and disposition of the Company towards achieving sets of goals and objectives, in compliance with applicable laws and regulations. Business Plan is a tool that helps a company to achieve its goals and objectives.

PESCO has started the business planning initiative / DIIP that will entail company's goals and objectives to the initiatives that are required to meet those objectives. The integrated cross-functional plan will cover the core business (transmission and distribution system expansion and rehabilitation) and support business (improving the commercial, financial, HR and other functional improvement) initiatives to meet the stated objectives. The PESCO's business plan for 2018-19 to 2022-23 is prepared by PESCO and will be update each year. In-order to sustain this initiative, a strategic planning organization is required within PESCO, who can assist the CEO of the Company to prepare, maintain, improve, monitor and get implemented the business plan.

Section - X
Implementation, Monitoring Plan and Reporting

i. Implementation Schedules

Transmission Expansion and Rehabilitation
Distribution Expansion and Rehabilitation:

ID	Task Name	Duration	Start	Finish
1	integrated generation, transmission and distribution	1320 days	Mon 02/07/18	Fri 21/07/23
2	Grid stations-Exp And Rehab	1320 days	Mon 02/07/18	Fri 21/07/23
3	designing and procurement	240 days	Mon 02/07/18	Fri 31/05/19
4	designing and development	6 mons	Mon 02/07/18	Fri 14/12/18
5	procurement	6 mons	Mon 02/07/18	Fri 14/12/18
6	delivery	6 mons	Mon 17/12/18	Fri 31/05/19
7	expansion and rehabilitation	1200 days	Mon 17/12/18	Fri 21/07/23
8	new grid construction	1200 days	Mon 17/12/18	Fri 21/07/23
9	conversion	60 mons	Mon 17/12/18	Fri 21/07/23
10	augmentation	60 mons	Mon 17/12/18	Fri 21/07/23
11	extension	60 mons	Mon 17/12/18	Fri 21/07/23
12	transmission lines	60 mons	Mon 17/12/18	Fri 21/07/23
13	designing and procurement	240 days	Mon 02/07/18	Fri 31/05/19
14	designing and development	6 mons	Mon 02/07/18	Fri 14/12/18
15	procurement	6 mons	Mon 02/07/18	Fri 14/12/18
16	delivery of material	6 mons	Mon 17/12/18	Fri 31/05/19
17	expension and rehabilitation	1200 days	Mon 17/12/18	Fri 21/07/23
18	new transmission lines	1200 days	Mon 17/12/18	Fri 21/07/23
19	reconductoring and upgrading	60 mons	Mon 17/12/18	Fri 21/07/23
20	reconductoring and rerouting	60 mons	Mon 17/12/18	Fri 21/07/23
21	fixed and switched capacitor installation	60 mons	Mon 17/12/18	Fri 21/07/23
22	distribution system	1320 days	Mon 02/07/18	Fri 21/07/23
23	rehabilitation and reconductoring	1320 days	Mon 02/07/18	Fri 21/07/23
24	designing and procurement	240 days	Mon 02/07/18	Fri 31/05/19
25	designing and development	6 mons	Mon 02/07/18	Fri 14/12/18
26	procurement	6 mons	Mon 02/07/18	Fri 14/12/18
27	delivery	6 mons	Mon 17/12/18	Fri 31/05/19
28	11kv and Below Rehabilitation	1200 days	Mon 17/12/18	Fri 21/07/23
29	Rehabilitation of HT lines	60 mons	Mon 17/12/18	Fri 21/07/23
30	New HT lines	60 mons	Mon 17/12/18	Fri 21/07/23
31	LT Rehabilitation	1200 days	Mon 17/12/18	Fri 21/07/23
32	Rehabilitaion of LT lines	60 mons	Mon 17/12/18	Fri 21/07/23

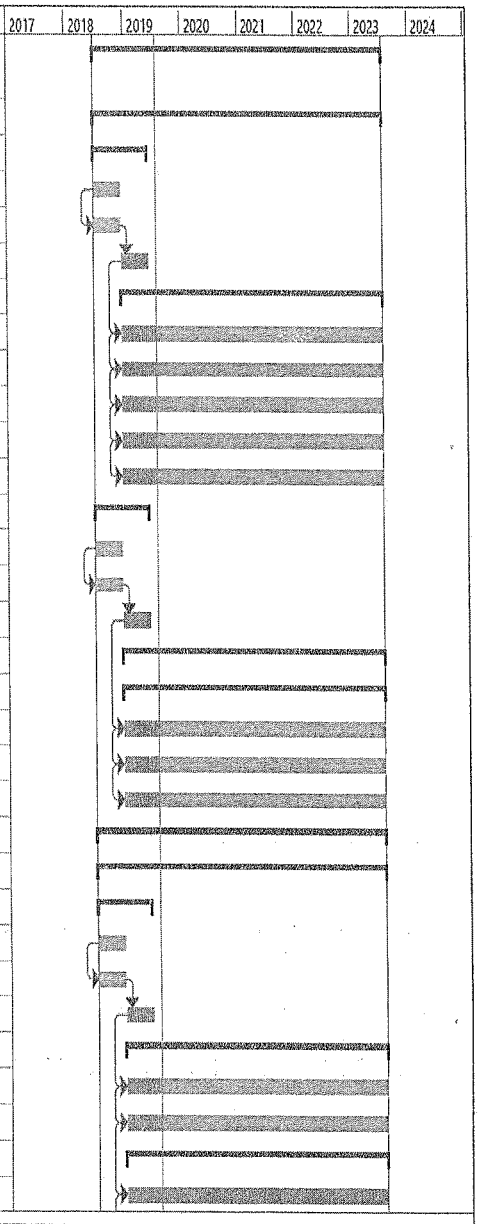

Page 1

ID	Task Name	Duration	Start	Finish
33	overloaded Transformer Augementation	60 mons	Mon 17/12/18	Fri 21/07/23
34	New Transformer substation	60 mons	Mon 17/12/18	Fri 21/07/23
35	Replacement of 2-leg Transformers	60 mons	Mon 17/12/18	Fri 21/07/23
36	New LT lines	60 mons	Mon 17/12/18	Fri 21/07/23
37	**expension**	**1200 days**	**Mon 17/12/18**	**Fri 21/07/23**
38	**11kv and Below Expansion**	**1200 days**	**Mon 17/12/18**	**Fri 21/07/23**
39	New HT lines	60 mons	Mon 17/12/18	Fri 21/07/23
40	transformers	60 mons	Mon 17/12/18	Fri 21/07/23
41	**LT Expansion**	**1200 days**	**Mon 17/12/18**	**Fri 21/07/23**
42	New LT lines	60 mons	Mon 17/12/18	Fri 21/07/23
43	transformers	60 mons	Mon 17/12/18	Fri 21/07/23
44	**planning and Engineering studies**	**1296 days**	**Mon 02/07/18**	**Mon 19/06/23**
45	GIS Mapping	64 mons	Mon 02/07/18	Fri 26/05/23
46	Study Based planning	53 mons	Tue 28/05/19	Mon 19/06/23

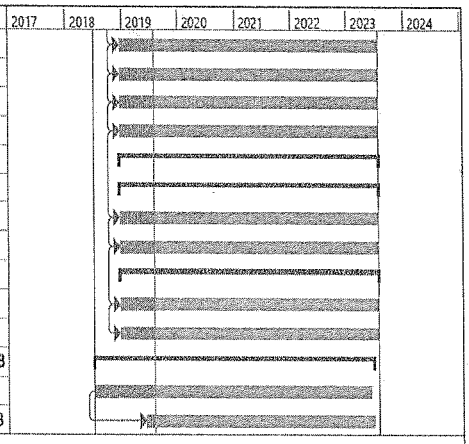

Page 2

LM Safety, Tools and Equipment:

ID	Task Name	Duration	Start	Finish
1	lineman safety program	1300 days	Mon 02/07/18	Fri 23/06/23
2	vehicles	1200 days	Mon 02/07/18	Fri 03/02/23
3	bucket Mounted trucks	1200 days	Mon 02/07/18	Fri 03/02/23
4	Ist Lot(38 trucks)	240 days	Mon 02/07/18	Fri 31/05/19
5	procurement	6 mons	Mon 02/07/18	Fri 14/12/18
6	delivery	6 mons	Mon 17/12/18	Fri 31/05/19
7	2nd Lot(134 trucks)	240 days	Fri 31/05/19	Thu 30/04/20
8	procurement	6 mons	Fri 31/05/19	Thu 14/11/19
9	delivery	6 mons	Fri 15/11/19	Thu 30/04/20
10	3rd Lot(6 trucks)	240 days	Fri 01/05/20	Thu 01/04/21
11	procurement	6 mons	Fri 01/05/20	Thu 15/10/20
12	delivery	6 mons	Fri 16/10/20	Thu 01/04/21
13	4rth Lot(6 trucks)	240 days	Fri 02/04/21	Thu 03/03/22
14	procurement	6 mons	Fri 02/04/21	Thu 16/09/21
15	delivery	6 mons	Fri 17/09/21	Thu 03/03/22
16	5th Lot(6 trucks)	240 days	Mon 07/03/22	Fri 03/02/23
17	procurement	6 mons	Mon 07/03/22	Fri 19/08/22
18	delivery	6 mons	Mon 22/08/22	Fri 03/02/23
19	Ravis	1200 days	Mon 02/07/18	Fri 03/02/23
20	Ist Lot(32 Ravis)	240 days	Mon 02/07/18	Fri 31/05/19
21	procurement	6 mons	Mon 02/07/18	Fri 14/12/18
22	delivery	6 mons	Mon 17/12/18	Fri 31/05/19
23	2nd Lot(110 Ravis)	240 days	Fri 31/05/19	Thu 30/04/20
24	procurement	6 mons	Fri 31/05/19	Thu 14/11/19
25	delivery	6 mons	Fri 15/11/19	Thu 30/04/20
26	3rd Lot(6 Ravis)	240 days	Fri 01/05/20	Thu 01/04/21
27	procurement	6 mons	Fri 01/05/20	Thu 15/10/20
28	delivery	6 mons	Fri 16/10/20	Thu 01/04/21
29	4rth Lot(6 Ravis)	240 days	Fri 02/04/21	Thu 03/03/22
30	procurement	6 mons	Fri 02/04/21	Thu 16/09/21
31	delivery	6 mons	Fri 17/09/21	Thu 03/03/22
32	5th Lot(6 Ravis)	240 days	Mon 07/03/22	Fri 03/02/23

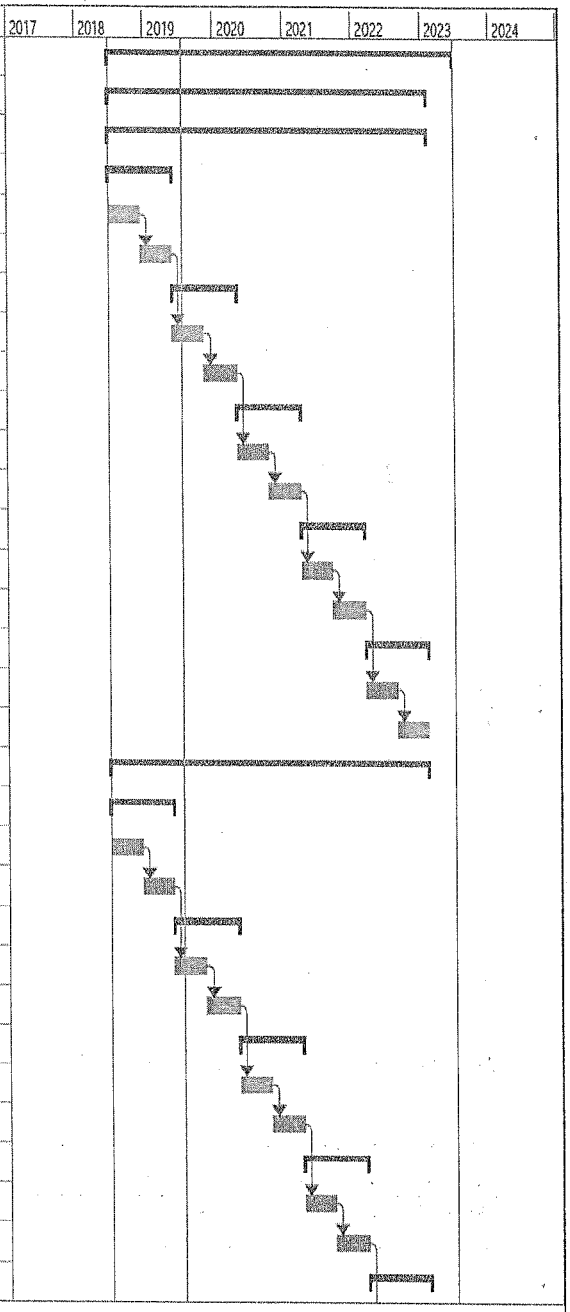

Page 1

ID	Task Name	Duration	Start	Finish
33	procurement	6 mons	Mon 07/03/22	Fri 19/08/22
34	delivery	6 mons	Mon 22/08/22	Fri 03/02/23
35	**Mobile phones**	**1200 days**	**Mon 02/07/18**	**Fri 03/02/23**
36	**1st Lot(38 phones)**	**240 days**	**Mon 02/07/18**	**Fri 31/05/19**
37	procurement	6 mons	Mon 02/07/18	Fri 14/12/18
38	delivery	6 mons	Mon 17/12/18	Fri 31/05/19
39	**2nd Lot(134 phones)**	**240 days**	**Fri 31/05/19**	**Thu 30/04/20**
40	procurement	6 mons	Fri 31/05/19	Thu 14/11/19
41	delivery	6 mons	Fri 15/11/19	Thu 30/04/20
42	**3rd Lot(6 phones)**	**240 days**	**Fri 01/05/20**	**Thu 01/04/21**
43	procurement	6 mons	Fri 01/05/20	Thu 15/10/20
44	delivery	6 mons	Fri 16/10/20	Thu 01/04/21
45	**4rth Lot(6 phones)**	**240 days**	**Fri 02/04/21**	**Thu 03/03/22**
46	procurement	6 mons	Fri 02/04/21	Thu 16/09/21
47	delivery	6 mons	Fri 17/09/21	Thu 03/03/22
48	**5th Lot(6 phones)**	**240 days**	**Mon 07/03/22**	**Fri 03/02/23**
49	procurement	6 mons	Mon 07/03/22	Fri 19/08/22
50	delivery	6 mons	Mon 22/08/22	Fri 03/02/23
51	**Tools & PPEs**	**1300 days**	**Mon 02/07/18**	**Fri 23/06/23**
52	procurement	48 mons	Mon 02/07/18	Fri 04/03/22
53	delivery	48.4 mons	Wed 09/10/19	Fri 23/06/23

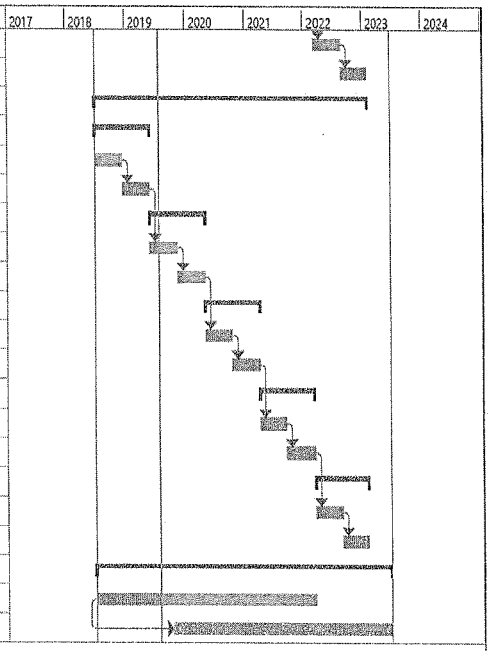

Page 2

Commercial Plan Schedule:

ID	Task Mode	Task Name	Duration	Start	Finish
1		commercial improvement plan	720 days	Mon 02/07/18	Fri 02/04/21
2		PESCO-Wide HHU Expansion	479 days	Mon 02/07/18	Thu 30/04/20
3		Mobile HHUs (1788 Units)	240 days	Mon 02/07/18	Fri 31/05/19
4		procurement	6 mons	Mon 02/07/18	Fri 14/12/18
5		delivery	6 mons	Mon 17/12/18	Fri 31/05/19
6		other equipments	240 days	Mon 02/07/18	Fri 31/05/19
7		PCs (142)	240 days	Mon 02/07/18	Fri 31/05/19
8		procurement	6 mons	Mon 02/07/18	Fri 14/12/18
9		delivery	6 mons	Mon 17/12/18	Fri 31/05/19
10		printers (142 units)	240 days	Mon 02/07/18	Fri 31/05/19
11		procurement	6 mons	Mon 02/07/18	Fri 14/12/18
12		delivery	6 mons	Mon 17/12/18	Fri 31/05/19
13		DSL Connection(137 units)	240 days	Mon 02/07/18	Fri 31/05/19
14		procurement	6 mons	Mon 02/07/18	Fri 14/12/18
15		delivery	6 mons	Mon 17/12/18	Fri 31/05/19
16		furniture & Accessories (150 units)	240 days	Mon 02/07/18	Fri 31/05/19
17		procurement	6 mons	Mon 02/07/18	Fri 14/12/18
18		delivery	6 mons	Mon 17/12/18	Fri 31/05/19
19		split Air conditioners (150 units)	240 days	Mon 02/07/18	Fri 31/05/19
20		procurement	6 mons	Mon 02/07/18	Fri 14/12/18
21		delivery	6 mons	Mon 17/12/18	Fri 31/05/19
22		transportation	479 days	Mon 02/07/18	Thu 30/04/20
23		bikes (930 units)	240 days	Mon 02/07/18	Fri 31/05/19
24		procurement	6 mons	Mon 02/07/18	Fri 14/12/18
25		delivery	6 mons	Mon 17/12/18	Fri 31/05/19
26		bikes (1395 units)	240 days	Fri 31/05/19	Thu 30/04/20
27		procurement	6 mons	Fri 31/05/19	Thu 14/11/19
28		delivery	6 mons	Fri 15/11/19	Thu 30/04/20
29		PESCO-Wide AMR Expansion	240 days	Mon 02/07/18	Fri 31/05/19
30		AMRs-Whole Current (61608 units)	240 days	Mon 02/07/18	Fri 31/05/19
31		procurement	3 mons	Mon 02/07/18	Fri 21/09/18

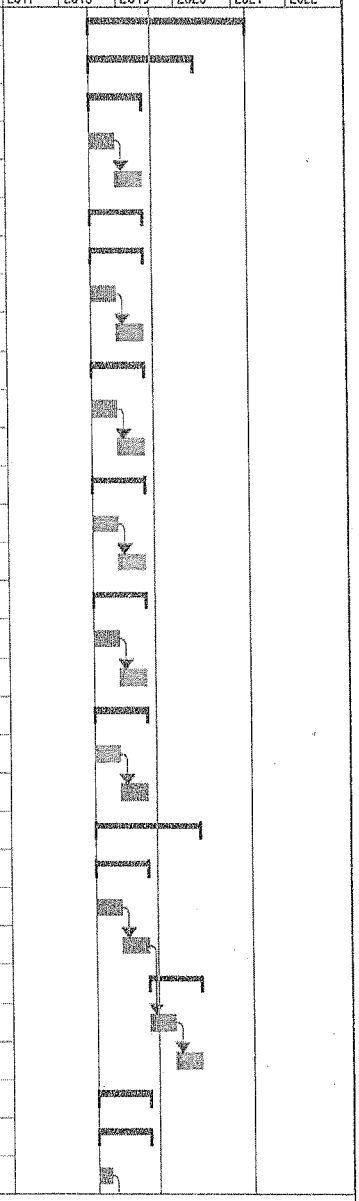

Page 1

ID	Task Mode	Task Name	Duration	Start	Finish
32		supply	3 mons	Mon 24/09/18	Fri 14/12/18
33		installation	6 mons	Mon 17/12/18	Fri 31/05/19
34		**AMRS-HT/LT-for new connections(6252 units)**	**240 days**	**Mon 02/07/18**	**Fri 31/05/19**
35		procurement	3 mons	Mon 02/07/18	Fri 21/09/18
36		supply	3 mons	Mon 24/09/18	Fri 14/12/18
37		installation	6 mons	Mon 17/12/18	Fri 31/05/19
38		**AMRs-Whole Current-for tubewells (56599 units)**	**240 days**	**Mon 02/07/18**	**Fri 31/05/19**
39		procurement	3 mons	Mon 02/07/18	Fri 21/09/18
40		supply	3 mons	Mon 24/09/18	Fri 14/12/18
41		installation	6 mons	Mon 17/12/18	Fri 31/05/19
42		**PESCO-Wide CIS Expansion**	**720 days**	**Mon 02/07/18**	**Fri 02/04/21**
43		IT infrastructure procurement	24 mons	Mon 02/07/18	Fri 01/05/20
44		IT infrastructure deployment	24 mons	Mon 03/06/19	Fri 02/04/21
45		Database configuration and updating	24 mons	Mon 03/06/19	Fri 02/04/21
46		**customer Service center improvement (254 facilities)**	**480 days**	**Mon 02/07/18**	**Fri 01/05/20**
47		revamping of CSC Rooms	24 mons	Mon 02/07/18	Fri 01/05/20
48		provision of furniture & fixtures	24 mons	Mon 02/07/18	Fri 01/05/20
49		computing equipment	24 mons	Mon 02/07/18	Fri 01/05/20
50		**PESCO-Wide survillience for Anti-theft**	**480 days**	**Mon 02/07/18**	**Fri 01/05/20**
51		proc & supply of 37 Toyota Hilux	24 mons	Mon 02/07/18	Fri 01/05/20
52		proc & supply of Tooling sets	24 mons	Mon 02/07/18	Fri 01/05/20
53		proc & supply of Mobile phones	24 mons	Mon 02/07/18	Fri 01/05/20

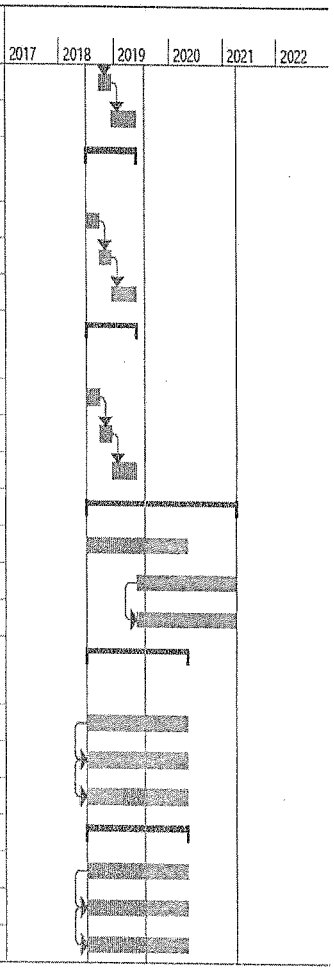

Page 2

Communications Plan Schedule:

ID	Task Name	Duration	Start
1	**communications improvement plan**	**1305 days**	**Mon 02/07/18**
2	**internal communications**	**1044 days**	**Tue 02/07/19**
3	Email server deployment	12 mons	Tue 02/07/19
4	provision of scanners	12 mons	Tue 02/07/19
5	provision of smart phones	12 mons	Tue 02/07/19
6	**Annual employee event**	**1044 days**	**Tue 02/07/19**
7	first event	1 day	Tue 02/07/19
8	second event	1 day	Wed 01/07/20
9	third event	1 day	Wed 30/06/21
10	fourth event	1 day	Thu 30/06/22
11	fifth event	1 day	Fri 30/06/23
12	**External communications**	**1280 days**	**Mon 02/07/18**
13	**Mass Media Campaigns**	**1200 days**	**Mon 02/07/18**
14	newspaper Ads in leading local news paper	60 mons	Mon 02/07/18
15	cable TV spots throughout peshawar and its surroundings	60 mons	Mon 02/07/18
16	public service announcement local FM radio	60 mons	Mon 02/07/18
17	Billboards & street pole streamers	60 mons	Mon 02/07/18
18	radio talk shows	60 mons	Mon 02/07/18
19	**public outreach & awareness programmes**	**1200 days**	**Mon 02/07/18**
20	university campus sessions	60 mons	Mon 02/07/18
21	local imam masjid sessions	60 mons	Mon 02/07/18
22	community center sessions	60 mons	Mon 02/07/18
23	chamber of commerce sessions	60 mons	Mon 02/07/18
24	press club meetings	60 mons	Mon 02/07/18
25	energy conservation walk	60 mons	Mon 02/07/18
26	painting & debate competition	60 mons	Mon 02/07/18
27	monthly news letter	64 mons	Mon 02/07/18

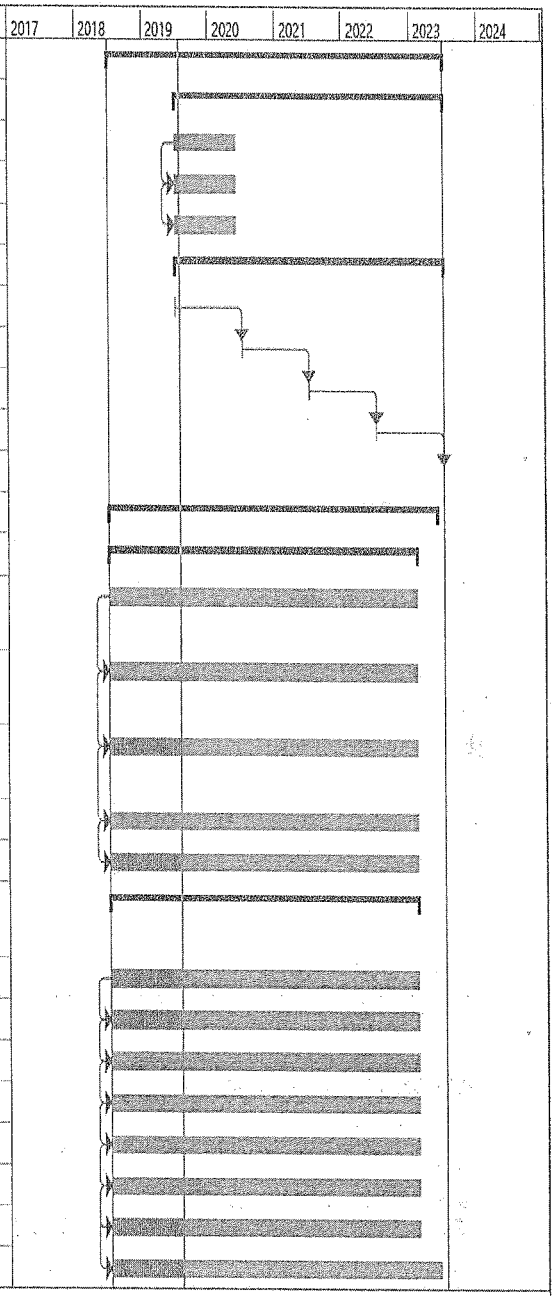

Page 1

HR Plan Schedule:

ID	Task Name	Duration	Start	Finish
1	**HR improvement plan**	**1221 days**	**Mon 02/07/18**	**Mon 06/03/23**
2	**training & capacity building**	**960 days**	**Tue 02/07/19**	**Mon 06/03/23**
3	management trainings	48 mons	Tue 02/07/19	Mon 06/03/23
4	international exchanges	48 mons	Tue 02/07/19	Mon 06/03/23
5	**CTC Upgrade (3 CTCs)**	**719 days**	**Mon 02/07/18**	**Thu 01/04/21**
6	**CTC # 1**	**239 days**	**Mon 02/07/18**	**Thu 30/05/19**
7	procurement of furn	3 mons	Mon 02/07/18	Fri 21/09/18
8	civil works	6 mons	Mon 24/09/18	Fri 08/03/19
9	renovation & revam	3 mons	Fri 08/03/19	Thu 30/05/19
10	**CTC # 2**	**240 days**	**Fri 31/05/19**	**Thu 30/04/20**
11	procurement of furniture & fixtures	3 mons	Fri 31/05/19	Thu 22/08/19
12	civil works	6 mons	Fri 23/08/19	Thu 06/02/20
13	renovation & revamping	3 mons	Fri 07/02/20	Thu 30/04/20
14	**CTC # 3**	**240 days**	**Fri 01/05/20**	**Thu 01/04/21**
15	procurement of furniture & fixtures	3 mons	Fri 01/05/20	Thu 23/07/20
16	civil works	6 mons	Fri 24/07/20	Thu 07/01/21
17	renovation & revamping	3 mons	Fri 08/01/21	Thu 01/04/21
18	**Improving work environment**	**961 days**	**Mon 02/07/18**	**Mon 07/03/22**
19	improving 20% of facilities	12 mons	Mon 02/07/18	Fri 31/05/19
20	improving 60% of facilities	12 mons	Mon 03/06/19	Fri 01/05/20

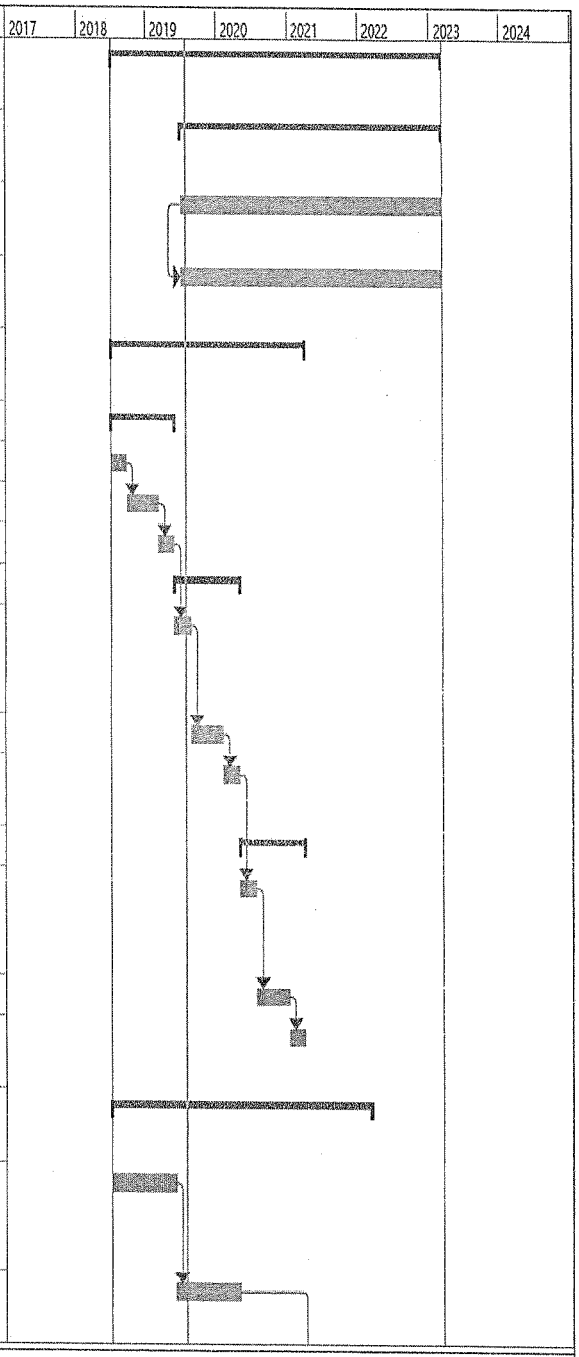

Page 1

ID	Task Name	Duration	Start	Finish
21	improving 20% of facilities	12 mons	Tue 06/04/21	Mon 07/03/22
22	**yard stick study**	**480 days**	**Mon 02/07/18**	**Fri 01/05/20**
23	hiring of consultant	6 mons	Mon 02/07/18	Fri 14/12/18
24	conducting YS study	18 mons	Mon 17/12/18	Fri 01/05/20

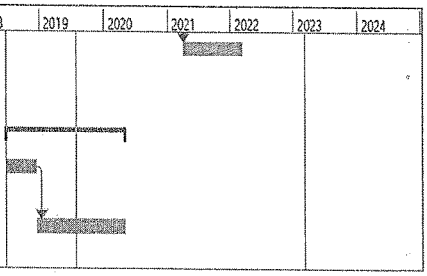

Page 2

ii. Monitoring of Outcomes, Physical and Financial Progress
Indicate Result Based Monitoring (RBM) framework indicators and physical and financial monitoring targets in quantifiable terms in the following table:

DIIP48 - Monitoring of Outcomes, Physical and Financial Progress

Sr. No	Project	Output	Outcome		Physical Completion Targets (Nos)							Financial Progress Targets (Million Rs.)						
			Baseline Indicator	Targets after Completion of Project	2015-16	2016-17	2017-18	2018-19	2019-20	2020-21	Total	2015-16	2016-17	2017-18	2018-19	2019-20	2020-21	Total
1																		
2																		
3																		
4																		
5																		
.																		
.																		
.																		
.																		
.																		

iii. Linkage with Performance Standards[6]

DIIP49 - Linkage with Performance Standards

Please refer to DIIP-4 for detailed mapping of benefits.

Section - XI
Environmental and Social Assessment and Mitigation Plans

There will be environmental and social impacts of the implementing these projects. A detailed environmental and social assessment is required to be carried out to successfully complete this project.

[6] Please align this sub-section with benefits identified in Section VII

ANNEX-1

PESCO GOALS AND OBJECTIVES

Strategic Goals	Strategic Objectives	Cordinating Directorate(s)	Leading Directorate	Tareget Measurement	Measurement 2017-18	Final Year Objective 2018-19 TO 2022-23					Project Manager	Supporting Plan
						2018-19	2019-20	2020-21	2021-22	2022-23		
1.0 Improve Operational Effeciency	**1.1.a** Reduce technical and comercial losses -Improved HT/LT Ratio -Improved power factor -Improved voltage profile - Reduce average length of HT feeders -AT&C based Investments -Single Phase transformers piloting to hard areas w/o LT - ABC expansion (conversion of bare LT with HT)	P&E, PD Const, PD GSC, MM, Fin, Comm, Ops, MIS	Technical	%age of KWh	Above 30%	36.6%	35%	34%	33%	32%	GM Technical, CE P&E and team	DIIP-Transmission and Distribution Plan

Strategic Goals	Strategic Objectives	Cordinating Directorate(s)	Leading Directorate	Tareget Measurement	Measurement 2017-18	Final Year Objective 2018-19 TO 2022-23					Project Manager	Supporting Plan
						2018-19	2019-20	2020-21	2021-22	2022-23		
1.0 Improve Operational Effeciency	**1.1.b** Reduce Comercial Losses	CSD, MIS and Ops	CSD	%age of KWh	This is progressive decreased by % of the commercial loss. Therefore, 3% commercial loss will be reduced	1.00%	0.50%	0.50%	0.50%	0.50%	CSD and his team	DIIP- Commercial Improvement Plan(CIP)
	1.2 Improve SAIDA/SAIFI To meet specified regulatory performance standards	Ops, T&G, O&M Dist, CSD, Technical	O&M Dist	Hours/Numbers	Over Specified Limit of NEPRA					To comply with NEPRA's specified standards		
	1.3 Improve collections to 100%	CSD, Ops, MIS, O&M Dist	CSD	%age billed amount excluding subsidy		88.6%	89%	91%	92%	93%		
	1.4 Eliminate fatal & non-fatal accidents	Ops, O&M Dist, MM, HR, Dev, T&G	Operations	No of acidents	in double figures per year	Substational Reduction	Eliminate	Eliminate	Eliminate	Eliminate	DD Safety	DIIP_ Lineman Safety Plan
2.0 Improve Customer Care and Service	**2.1.1** "Soft area" Reduction in billing complaints to less than 1%	Ops, CSD, O&M Dist	CSD	%age of total consumers	More than 10%	Reduction	Reduction	Reduction	<1%	<1%	CSD and his team	DIIP- Commercial Improvement Plan(CIP)
	2.1.2 "Hard area" Reduction in billing complaints to less than 5%	Ops, CSD, O&M Dist	CSD	%age of total consumers	More than 10%	Reduction	Reduction	Reduction	<25%	<10%		
	2.2 Minimize New Connections installation duration	Ops, O&M, Dist, CSD, MM	CSD	No of days	NERPA's guidelines not complied with			To comply with NEPRA's specified standards				
	2.3 Minimize Reconnection installation duration	Ops, O&M, Dist, CSD, MM	CSD	No of days	NERPA's guidelines not complied with			To comply with NEPRA's specified standards				
	2.4 Minimize the redressal time for supply complaints	Ops, MIS, CSD, O&M Dist	MIS	Hours	NERPA's guidelines not complied with			To comply with NEPRA's specified standards				

Strategic Goals	Strategic Objectives	Cordinating Directorate(s)	Leading Directorate	Tareget Measurement	Measurement 2017-18	Final Year Objective 2018-19 TO 2022-23					Project Manager	Supporting Plan
						2018-19	2019-20	2020-21	2021-22	2022-23		
3.0 Improve PESCO's Infrastructure	3.1 Human-ware											
	3.1.1 Start Training & capacity building initiatives	HR & All	HR		Legacy training	TNA, Training plans, CPD					HRD and his team	Human Resources Improvement Plan (IIRIP)
	3.1.2 Fulfill the basic requirement for needs to operate for field staff	HR, FIN, Ops, O&M Dist	HR		No comprehensive system in place	LM plan part of the overall DIIP						
	3.2 Orgaware											
	3.2.1 Org A&R review and implementation	HR & All	HR		Not fully implemented	Align org structure with business strategy					HRD and his team	Organizational Improvement Plan(OIP)
	3.2.2 Improve recruitment process	All	HR		Legacy Process	Needs Improvement						
	3.2.3 Conduct yardstick study for Human Resources	All	HR		Yardstick study is obsolete	Yardstick Study to be updated						
	3.2.4 Implement Performance based management system	PR, HR	HR		Legacy system with no implementation	1)Upgrade and implement the existing acelerated promotion policy and 2) Increments based on performance ratings of PER's						
	3.2.5 Improvement in office facilities/work environment	HR & All	HR		Limited/inadequate facilities	Needs Improvement						

Strategic Goals	Strategic Objectives	Cordinating Directorate(s)	Leading Directorate	Tareget Measurement	Measurement 2017-18	Final Year Objective 2018-19 TO 2022-23					Project Manager	Supporting Plan
						2018-19	2019-20	2020-21	2021-22	2022-23		
3.0 Improve PESCO's Infrastructure	**3.3 Technoware**											
	3.3.1 AMI expansion	MIS, Ops, O&M Dist, CSD, P&E	CSD	% of Customers Covered with AMR	Project by PESCO is in process.	AMR/AMI at all CDPs (60 Nos) are installed. AMR/AMI at all 11 KV feeders are installed both on incoming and outgoing. AMR/AMI at consumer level upto 10 kw load will be installed in next five years.					CSD	Commercial Improvement Plan (CIP)
	3.3.2 Expand HHU and meter correction	MIS, Ops, O&M Dist, CSD, P&E	CSD	% of Customers Covered with HHUs	Project by PESCO is in process.	"Soft area" 100% is completed. "Hard area" 70% will be cover in next five years.					CSD	Commercial Improvement Plan (CIP)
	3.3.3 Replace electromechanical meters with static meters (100%)	Ops, O&M Dist, CSD, P&E	CSD	% of Customers Covered with Static Meters	Project by PESCO is in process.	100% electronic meters					CSD	Commercial Improvement Plan (CIP)
	3.3.4 P&E expansion to GIS Mapping	P&E, MIS, Ops, O&M Dist	P&E		Project by PESCO is in process.	Fully implemented in PESCO					P&E	DIIP
	3.4 Inforware											
	3.4.1 Implement ERP & its rollout	All	FIN		Project by PESCO is in process.	Extension of the IT network to support ERP in all circles. (ERP Progress = 80%)					FD	Financial Management Improvement Plan (FMIP)
	3.4.2 Implement CIS & its rollout	CSD, MIS	CSD		Project by PESCO is in process.	Extended to all circles					CSD	Commercial Improvement Plan (CIP)
	3.4.3 Expand intranet portal to PESCO	All	MIS		Deployment at H/Q level	Already deployed and will be improved further in next five years.					MIS	Communication Improvement Plan (CIP)
	3.4.4 Improve communications through email	All	MIS		Paper based communication	Promote e-communication culyure					DGIT	Internal comm. Improvement Plan(ICIP)

Strategic Goals	Strategic Objectives	Cordinating Directorate(s)	Leading Directorate	Tareget Measurement	Measurement 2017-18	Final Year Objective 2018-19 TO 2022-23					Project Manager	Supporting Plan
						2018-19	2019-20	2020-21	2021-22	2022-23		
4.0 Comply with applicable laws and regulation	4.1 Companies Ordinance 1984	FIN, Company Secetary	FIN		–	Study and Compliance Required					All	Create a Library, map all requirements and Make it part of Business Plan
	4.2 Code of Corporate Governance for Public Sector	FIN, Company Secetary	FIN		–							
	4.3 Income Tax Ordinance	Legal, FIN, CSD, MIS	FIN		–							
	4.4 Sales Tax Act	Legal, FIN, CSD, MIS	FIN		–							
	4.5 Electricity Act & rules	Legal, CSD	CSD		–							
	4.6 Theft Ordinance CPC	Ops, Legal	CSD		–							
	4.7 Industrial Relations	HR, Legal	HR		–							
	4.8 Other labor laws	HR, Legal	HR		–							
	4.9 PPRA Rules	Dev, P&E	P&E		–							
	4.10 Distribution Licence	Ops, T&G, P&E, Dev, CSD, FIN	FIN		–							
	4.11 NEPRA Act & Rules	All	FIN		–							
	4.12 Compliance with	Dev	Dev		–							
	4.13 Power Sale Agreement with CPPA	Legal, FIN, CSD, T&G	FIN		–							
5.0 Make PESCO a socially responsible corporate entity	5.3 Campaign for energy conservation	P&E, PR	PR	No of Campaigns	Limited Campaigns	DISCO's wide					Communication Head	Stakeholders Communication Plan

Table 1-42: Family of Grids (Existing, Proposed & Transit Grid) (Contd....)

Sr. No.	Group No.	Grid No.	Name of Grid Station	KV	Year										
					2016-17	2017-18	2018-19	2019-20	2020-21	2021-22	2022-23	2023-24	2024-25	2025-26	2026-27
40	26	26	D.I KHAN	132	88.1	93	97.7	102.3	106.9	111.6	116.3	121.1	126	131	136
41	26	5586	D.I Khan-D.I. K	132	12	12.2	12.5	12.7	12.9	13.1	13.4	13.6	13.8	14.1	14.3
42	26	5599	D.I Khan-Panyal	132	8	8.2	8.3	8.5	8.6	8.8	8.9	9.1	9.2	9.4	9.5
43	26	4471	D.I. Khan-II	132	0	0	0	0	0	0	0	0	0	0	0
44	26	4482	Panyala	132	0	0	0	0	0	0	0	0	0	0	0
45	32	32	Kohat Cement	132	36.5	36.5	36.5	36.5	36.5	36.5	36.5	36.5	36.5	36.5	36.5
46	33	33	Chitral H/P	11	1.3	1.4	1.4	1.4	1.5	1.5	1.6	1.6	1.7	1.7	1.7
47	34	34	Timergara	66	7.8	8.2	8.7	9.1	9.6	10	10.5	11	11.4	11.9	12.4
48	34	5612	Timergara-LalQi	132	1.3	1.3	1.4	1.4	1.4	1.4	1.4	1.5	1.5	1.5	1.5
49	34	5611	Timergara-Munda	132	1.3	1.3	1.4	1.4	1.4	1.4	1.4	1.5	1.5	1.5	1.5
50	34	4493	Lakki	132	0	0	0	0	0	0	0	0	0	0	0
51	34	4494	LalQila Maidan	132	0	0	0	0	0	0	0	0	0	0	0
52	36	5569	Wari-Wari	132	10.2	10.3	10.5	10.6	10.8	10.9	11.1	11.2	11.4	11.5	11.7
53	36	36	Wari	66	0	0	0	0	0	0	0	0	0	0	0
54	36	4455	Wari	132	0	0	0	0	0	0	0	0	0	0	0
55	37	37	Chakdara	132	61.8	65.1	68.3	71.4	74.5	77.6	80.8	84	87.2	90.5	93.8
56	37	5582	Chakdara-Batkhe	132	10	10.2	10.4	10.6	10.8	10.9	11.1	11.3	11.5	11.7	11.9
57	37	4467	Batkhela	132	0	0	0	0	0	0	0	0	0	0	0
58	39	39	Dargai	132	51.8	54.8	56.8	58	59.1	60.3	61.5	62.8	64	65.3	66.6
59	41	41	Daggar	132	42.9	45.4	47.9	50.2	52.5	54.9	57.3	59.8	62.2	64.7	67.3
60	41	5600	Dargai-Dargai-I	132	16.4	17.5	18.2	18.6	18.9	19.3	19.7	20.1	20.6	21	21.4
61	41	4483	Dargai-II	132	0	0	0	0	0	0	0	0	0	0	0

Table 1-42: Family of Grids (Existing, Proposed & Transit Grid) (Contd....)

Sr. No.	Group No.	Grid No.	Name of Grid Station	KV	Year										
					2016-17	2017-18	2018-19	2019-20	2020-21	2021-22	2022-23	2023-24	2024-25	2025-26	2026-27
62	42	42	Madyan	132	7	7.2	7.4	7.6	7.7	7.9	8.1	8.3	8.5	8.7	8.9
63	43	43	Jamrud	132	61.7	67.3	71.6	74.4	77.4	80.4	83.4	86.5	89.7	92.9	96.2
64	43	5606	Jamrud-Jamrud-I	132	20	21.4	22.4	22.9	23.5	24	24.6	25.2	25.7	26.3	27
65	43	4489	Jamrud-II	132	0	0	0	0	0	0	0	0	0	0	0
66	46	46	Kohat	132	74.5	78.3	82	85.7	89.4	93.2	97.1	100.9	104.9	108.9	113
67	46	5596	Kohat-Shakar Da	132	8	8.2	8.3	8.5	8.6	8.8	9	9.1	9.3	9.5	9.6
68	46	4480	Shakar Dara	132	0	0	0	0	0	0	0	0	0	0	0
69	47	47	Kohat	66	1.7	1.7	1.8	1.9	2	2.1	2.1	2.2	2.3	2.4	2.5
70	48	48	Hangu	132	23.8	25.2	26.7	28.1	29.5	31	32.5	33.9	35.4	37	38.5
71	48	5595	Hangu-Doaba	132	12	12.2	12.4	12.6	12.7	12.9	13.1	13.3	13.5	13.7	14
72	48	4479	Doaba	132	0	0	0	0	0	0	0	0	0	0	0
73	49	49	Tall	132	30.9	32.6	33.9	35	36	37	38.1	39.2	40.3	41.4	42.5
74	50	50	Karak	132	38.9	40.7	42.5	44.2	46	47.7	49.5	51.3	53.1	54.9	56.7
75	50	5575	Karak-Sabir aba	132	10	10.2	10.3	10.5	10.6	10.8	10.9	11.1	11.2	11.4	11.6
76	50	5576	Karak-Siraj Bab	132	10	10.2	10.3	10.5	10.6	10.8	10.9	11.1	11.2	11.4	11.6
77	50	4461	Sabir abad	132	0	0	0	0	0	0	0	0	0	0	0
78	50	4462	Siraj Baba	132	0	0	0	0	0	0	0	0	0	0	0
79	51	51	Lachi	132	29.9	31	32.1	33.2	34.3	35.4	36.6	37.7	38.8	40	41.2
80	52	52	Gumbat	132	17.4	18.1	18.7	19.3	20	20.6	21.3	22	22.6	23.3	24

Table 1-42: Family of Grids (Existing, Proposed & Transit Grid) (Contd....)

Sr. No.	Group No.	Grid No.	Name of Grid Station	KV	Year										
					2016-17	2017-18	2018-19	2019-20	2020-21	2021-22	2022-23	2023-24	2024-25	2025-26	2026-27
81	56	56	Mardan-1	220	59.8	62.6	65.4	68.2	71	73.9	76.8	79.7	82.7	85.7	88.8
82	57	5574	Mardan-2-Mardan	132	20	20.3	20.7	21.1	21.5	21.9	22.3	22.7	23.2	23.6	24
83	57	5594	Mardan-2-Mardan	132	14	14.2	14.5	14.8	15.1	15.3	15.6	15.9	16.2	16.5	16.8
84	57	57	Mardan-2	132	10.2	11.8	13.4	15	16.7	18.4	20.1	21.8	23.5	25.2	27
85	57	5585	Mardan-2-Behram	132	10	10.2	10.4	10.6	10.8	11	11.2	11.4	11.6	11.8	12
86	57	4470	Behram Kili	132	0	0	0	0	0	0	0	0	0	0	0
87	57	4460	Mardan-3	132	0	0	0	0	0	0	0	0	0	0	0
88	57	4478	Mardan-4	132	0	0	0	0	0	0	0	0	0	0	0
89	58	58	Jalala	132	55.7	59	62.2	65.2	68.3	71.4	74.6	77.8	81.1	84.4	87.7
90	58	5591	Jalala-Lund Khw	132	10	10.2	10.4	10.6	10.8	11	11.1	11.3	11.5	11.7	11.9
91	58	4475	Lund Khwar	132	0	0	0	0	0	0	0	0	0	0	0
92	59	59	Sakhi Chashma	132	34.3	35.9	37.4	38.6	39.9	41.3	42.6	44	45.3	46.7	48.1
93	60	60	Hussai	132	45.4	46.8	48	49.3	50.6	51.8	53.1	54.5	55.8	57.1	58.5
94	60	5604	Hussai-Rustam	132	8	8.1	8.3	8.4	8.5	8.7	8.8	8.9	9.1	9.2	9.3
95	60	4487	Rustam	132	0	0	0	0	0	0	0	0	0	0	0
96	61	61	Swabi	132	54.3	57.5	60.6	63.8	67	70.2	73.4	76.7	80	83.3	86.7
97	61	5593	Swabi-Nawan Kil	132	12	12.2	12.4	12.6	12.8	13	13.2	13.4	13.7	13.9	14.1
98	61	5589	Swabi-Baja Bam	132	8	8.1	8.3	8.4	8.5	8.7	8.8	9	9.1	9.2	9.4
99	61	5577	Swabi-Chota Lah	132	8	8.1	8.3	8.4	8.5	8.7	8.8	9	9.1	9.2	9.4
100	61	4473	Baja Bam Khel	132	0	0	0	0	0	0	0	0	0	0	0
101	61	4463	Chota Lahore	132	0	0	0	0	0	0	0	0	0	0	0
102	61	4477	Nawan Kili	132	0	0	0	0	0	0	0	0	0	0	0

Table 1-42: Family of Grids (Existing, Proposed & Transit Grid) (Contd....)

Sr. No.	Group No.	Grid No.	Name of Grid Station	KV	Year										
					2016-17	2017-18	2018-19	2019-20	2020-21	2021-22	2022-23	2023-24	2024-25	2025-26	2026-27
103	62	62	Katlang	132	18.7	19.2	19.7	20.2	20.7	21.2	21.8	22.3	22.8	23.4	23.9
104	65	65	Charsadda	132	63.6	66.9	70.1	73.3	76.5	79.8	83.1	86.4	89.8	93.3	96.7
105	65	5592	Charsadda-Manga	132	8	8.2	8.3	8.5	8.6	8.8	8.9	9.1	9.2	9.4	9.6
106	65	4476	Manga Dargai	132	0	0	0	0	0	0	0	0	0	0	0
107	68	68	Nowshera City	132	68.6	72.2	75.6	78.7	81.9	85.1	88.3	91.7	95	98.4	101.9
108	69	69	Nowshera Indust	132	26.3	27.9	29.4	30.9	32.4	33.9	35.4	37	38.6	40.2	41.9
109	69	5578	Nowshera Indust	132	8	8.2	8.4	8.5	8.7	8.9	9.1	9.3	9.4	9.6	9.8
110	69	4464	Kaka Sahib	132	0	0	0	0	0	0	0	0	0	0	0
111	70	70	Peshawar Cantt	132	45.6	48.7	51.9	55.1	58.4	61.8	65.2	68.7	72.3	75.9	79.6
112	70	5559	Peshawar Cantt-	132	10	10.2	10.5	10.7	11	11.2	11.5	11.8	12	12.3	12.6
113	70	5580	Peshawar Cantt-	132	8	8.2	8.4	8.6	8.8	9	9.2	9.4	9.6	9.9	10.1
114	70	5597	Peshawar Cantt-	132	8	8.2	8.4	8.6	8.8	9	9.2	9.4	9.6	9.9	10.1
115	70	4445	Pesco Colony	132	0	0	0	0	0	0	0	0	0	0	0
116	70	4465	Warsak Road	132	0	0	0	0	0	0	0	0	0	0	0
117	71	71	Peshawar City	132	61.7	65.6	69.4	73.2	76.9	80.8	84.7	88.6	92.7	96.8	100.9
118	71	5556	Peshwar City-Ta	132	15	15.4	15.7	16	16.3	16.6	16.9	17.3	17.6	18	18.3
119	71	5557	Peshawar Fort-P	132	11.1	11.4	11.6	11.9	12.2	12.5	12.8	13.1	13.4	13.7	14
120	71	4444	Taru Jabba	132	0	0	0	0	0	0	0	0	0	0	0

Table 1-42: Family of Grids (Existing, Proposed & Transit Grid) (Contd....)

Sr. No.	Group No.	Grid No.	Name of Grid Station	KV	Year										
					2016-17	2017-18	2018-19	2019-20	2020-21	2021-22	2022-23	2023-24	2024-25	2025-26	2026-27
121	72	72	Peshawar Fort	132	56.4	59.5	62.5	65.6	68.8	72	75.3	78.7	82.1	85.7	89.3
122	73	5566	Badaber-Badaber	132	13.5	14.2	14.8	15.4	15.9	16.5	17.1	17.7	18.3	18.9	19.5
123	73	73	Badaber	66	0	0	0	0	0	0	0	0	0	0	0
124	73	4452	Badaber	132	0	0	0	0	0	0	0	0	0	0	0
125	74	74	Shahi Bagh	132	69.7	73.5	77.3	81	84.7	88.6	92.5	96.4	100.4	104.5	108.7
126	74	5558	Shahi Bagh-Pesc	132	7	7.2	7.3	7.5	7.6	7.8	7.9	8.1	8.2	8.4	8.6
127	75	75	Peshawar Indust	132	79	83.5	87.8	91.9	96.1	100.4	104.7	109.1	113.5	118.1	122.7
128	75	5598	Peshawar Indust	132	10	10.2	10.5	10.6	10.8	11	11.3	11.5	11.7	11.9	12.1
129	75	4481	Bara Road	132	0	0	0	0	0	0	0	0	0	0	0
130	76	76	Peshawar Univer	132	81.2	84.3	87.3	90.4	93.5	96.7	99.9	103.2	106.5	109.9	113.3
131	77	77	Mattani	132	46.2	48.8	51.1	52.9	54.8	56.7	58.6	60.5	62.5	64.4	66.4
132	78	78	Jehangira	132	53.3	56.4	59.1	61.4	63.7	66	68.4	70.8	73.3	75.7	78.2
133	79	79	Nizampur	132	8	8.3	8.5	8.8	9.2	9.6	10	10.3	10.7	11.1	11.5
134	80	80	Pabbi	132	33.1	35.5	37.9	40.2	42.6	45.1	47.5	50	52.5	55	57.6
135	80	5555	Pabbi-Taru Jabb	132	15	15.3	15.5	15.8	16	16.3	16.6	16.9	17.1	17.4	17.7
136	80	5584	Pabbi-Chirat in	132	14	14.2	14.5	14.7	15	15.2	15.5	15.7	16	16.3	16.6
137	80	4469	Chirat industri	132	0	0	0	0	0	0	0	0	0	0	0
138	81	81	Kheshki	66	3.6	3.7	3.8	3.9	4.1	4.2	4.3	4.4	4.5	4.7	4.8
139	83	83	Shabqadar	132	68.4	72.1	75.8	79.4	83.1	86.8	90.5	94.3	98.1	101.9	105.8
140	83	5581	Shabqadar-Hasan	132	8	8.1	8.3	8.4	8.5	8.7	8.8	9	9.1	9.2	9.4
141	83	5587	Shabqadar-Nagum	132	6	6.1	6.2	6.3	6.4	6.5	6.6	6.7	6.8	6.9	7
142	83	4466	Hasan zai	132	0	0	0	0	0	0	0	0	0	0	0

Table 1-42: Family of Grids (Existing, Proposed & Transit Grid) (Contd....)

`Sr. No.	Group No.	Grid No.	Name of Grid Station	KV	Year										
					2016-17	2017-18	2018-19	2019-20	2020-21	2021-22	2022-23	2023-24	2024-25	2025-26	2026-27
143	84	84	Tangi	132	62.3	64.9	67.3	69.6	71.8	74.1	76.4	78.7	81	83.4	85.8
144	85	85	Gurguri	132	5.2	5.3	5.4	5.6	5.7	5.8	6	6.1	6.2	6.4	6.5
145	86	86	Warsak	132	30.3	31.7	32.9	34.2	35.5	36.8	38.1	39.4	40.8	42.1	43.5
146	86	5579	Warsk-Warsak Ro	132	8	8.1	8.3	8.4	8.5	8.6	8.8	8.9	9	9.2	9.3
147	87	87	AMC Abbottabad	132	23.8	25	26.1	27.3	28.5	29.7	30.9	32.2	33.5	34.7	36.1
148	88	88	Nathia Gali	132	5.6	5.8	5.9	6	6.1	6.2	6.4	6.5	6.6	6.8	6.9
149	89	89	Hattar	132	74.4	83.7	91.3	96.8	102.4	108.1	113.8	119.7	125.7	131.8	138
150	89	5605	Hattar-Hattar-I	132	20	21.5	22.6	23.1	23.6	24.2	24.7	25.3	25.8	26.4	27
151	89	4488	Hattar-II	132	0	0	0	0	0	0	0	0	0	0	0
152	90	90	Tarbela P/H	11	3.4	3.6	3.7	3.8	4	4.1	4.3	4.4	4.5	4.7	4.9
153	91	5568	Dir-Dir	132	10.9	11.3	11.7	12.1	12.5	12.9	13.3	13.7	14.1	14.5	15
154	91	91	Dir	66	0	0	0	0	0	0	0	0	0	0	0
155	91	4454	Dir	132	0	0	0	0	0	0	0	0	0	0	0
156	92	92	Swat	132	67.1	70.9	74.5	77.9	81.4	84.9	88.4	92	95.6	99.3	103
157	92	5602	Swat-Kabal	132	12	12.3	12.6	12.8	13	13.2	13.5	13.7	13.9	14.2	14.5
158	92	4485	Kabal	132	0	0	0	0	0	0	0	0	0	0	0
159	94	94	Khwaza Khela	132	37.9	39.3	40.7	42.1	43.6	45	46.4	47.9	49.4	50.8	52.4
160	96	96	Rehman Baba	132	50	52.3	54.6	56.9	59.2	61.6	63.9	66.3	68.8	71.2	73.7
161	97	97	Dalazak	132	35.5	36.1	36.6	37.1	37.7	38.2	38.8	39.3	39.9	40.5	41
162	99	99	Rajar	132	18.1	18.7	19.3	19.9	20.6	21.2	21.8	22.5	23.1	23.8	24.5
163	102	102	Domail	220	48.2	49.5	50.8	52.1	53.3	54.6	55.9	57.3	58.6	60	61.3

Table 1-42: Family of Grids (Existing, Proposed & Transit Grid) (Contd....)

Sr. No.	Group No.	Grid No.	Name of Grid Station	KV	Year										
					2016-17	2017-18	2018-19	2019-20	2020-21	2021-22	2022-23	2023-24	2024-25	2025-26	2026-27
164	117	117	Shangla	132	10	10.2	10.5	10.7	11	11.2	11.5	11.8	12	12.3	12.6
165	121	121	Hayatabad	132	53	54.1	55.1	55.9	56.8	57.7	58.6	59.5	60.4	61.3	62.3
166	123	123	Muzafar Abad	132	96.3	99.4	102.5	105.6	108.8	112.1	115.5	118.9	122.4	125.9	129.6
167	124	124	Hattian	132	9.2	9.5	9.9	10.3	10.6	11	11.4	11.8	12.2	12.6	13
168	125	125	Nousery	132	5.2	5.4	5.6	5.8	6	6.2	6.5	6.7	6.9	7.1	7.4
169	127	127	Sheikh Muhammad	500	29.2	29.9	30.6	31.3	32	32.8	33.5	34.3	35	35.8	36.6
170	130	130	Sadi Cement	132	24.6	24.6	24.6	24.6	24.6	24.6	24.6	24.6	24.6	24.6	24.6
171	133	133	Timergara	132	42.7	44.3	45.9	47.4	49	50.6	52.3	53.9	55.6	57.3	59
172	134	134	Tarnawa	132	5.1	5.2	5.3	5.4	5.5	5.5	5.6	5.7	5.8	5.9	6
173	135	135	Best Way Cement	132	20.5	20.5	20.5	20.5	20.5	20.5	20.5	20.5	20.5	20.5	20.5
174	136	5572	Thakot-Thakot	132	8.6	8.8	8.9	9	9.2	9.3	9.5	9.6	9.8	9.9	10.1
175	136	136	Thakot	33	0	0	0	0	0	0	0	0	0	0	0
176	136	4458	Thakot	132	0	0	0	0	0	0	0	0	0	0	0
177	137	5567	Band Kurai-Band	132	18.8	19.7	20.5	21.4	22.2	23.1	23.9	24.8	25.7	26.5	27.4
178	137	4453	Band Kurai	132	0	0	0	0	0	0	0	0	0	0	0
179	137	137	Bandkuri	66	0	0	0	0	0	0	0	0	0	0	0
180	138	5561	Daraban-Daraban	132	9.7	10	10.2	10.5	10.7	11	11.3	11.5	11.8	12.1	12.4
181	138	138	Daraban	66	0	0	0	0	0	0	0	0	0	0	0
182	138	4447	Daraban	132	0	0	0	0	0	0	0	0	0	0	0
183	139	139	Prova	132	18.8	19.6	20.5	21.3	22.1	23	23.8	24.7	25.6	26.5	27.4
184	150	150	AWT Nizampur	132	34.9	34.9	34.9	34.9	34.9	34.9	34.9	34.9	34.9	34.9	34.9
185	153	153	Muree	132	5.1	7.2	9.3	11.5	13.6	15.8	18	20.2	22.4	24.7	26.9

Table 1-42: Family of Grids (Existing, Proposed & Transit Grid) (Contd....)

Sr. No.	Group No.	Grid No.	Name of Grid Station	KV	Year										
					2016-17	2017-18	2018-19	2019-20	2020-21	2021-22	2022-23	2023-24	2024-25	2025-26	2026-27
186	154	154	Consumer GS	132	19.7	19.7	19.7	19.7	19.7	19.7	19.7	19.7	19.7	19.7	19.7
187	155	155	Wah	132	2.9	3	3.2	3.3	3.5	3.6	3.7	3.9	4	4.2	4.3
188	158	158	Cherat Cement	132	10	10.1	10.2	10.3	10.4	10.5	10.6	10.7	10.8	10.9	11
189	159	159	Shahi Bagh	220	19	20	21	22	23	24.1	25.1	26.1	27.2	28.3	29.4
190	159	5588	Shahi Bagh-Nagu	132	4	4.1	4.1	4.2	4.2	4.3	4.4	4.4	4.5	4.5	4.6
191	159	4472	Naguman	132	0	0	0	0	0	0	0	0	0	0	0
192	161	161	Cattar Class	132	0.1	0.1	0.1	0.1	0.1	0.1	0.1	0.1	0.1	0.1	0.2
193	166	166	Garam Chashma P	11	0	0	0	0	0	0	0	0	0	0	0
194	171	5570	Darosh-Darosh13	132	1.4	1.4	1.4	1.5	1.5	1.5	1.5	1.5	1.6	1.6	1.6
195	171	171	Darosh	33	0	0	0	0	0	0	0	0	0	0	0
196	171	4456	Darosh132	132	0	0	0	0	0	0	0	0	0	0	0
197	176	5571	Jutilisht-Jutil	132	2.8	2.8	2.9	2.9	2.9	3	3	3.1	3.1	3.2	3.2
198	176	176	Jutilasht	33	0	0	0	0	0	0	0	0	0	0	0
199	176	4457	Jutilisht132	132	0	0	0	0	0	0	0	0	0	0	0
200	251	251	Kotal Town Koha	132	28.5	29.4	30.2	31.1	32	32.9	33.8	34.7	35.7	36.6	37.6
201	252	252	Gomal Universit	132	11.7	12	12.4	12.7	13	13.3	13.6	14	14.3	14.6	15
202	253	253	Dobian	132	16.8	17.4	18	18.6	19.2	19.8	20.4	21.1	21.7	22.3	23
203	254	5562	Besham-Besham13	132	3.1	3.2	3.2	3.3	3.4	3.5	3.6	3.7	3.8	3.9	4
204	254	254	Besham	132	0	0	0	0	0	0	0	0	0	0	0
205	254	4448	Besham132	132	0	0	0	0	0	0	0	0	0	0	0

Table 1-42: Family of Grids (Existing, Proposed & Transit Grid) (Contd....)

Sr. No.	Group No.	Grid No.	Name of Grid Station	KV	Year										
					2016-17	2017-18	2018-19	2019-20	2020-21	2021-22	2022-23	2023-24	2024-25	2025-26	2026-27
206	255	255	Chashma	132	5	5.2	5.4	5.6	5.8	6	6.2	6.4	6.6	6.8	7
207	265	5565	Kurram Garhi-Ku	132	1.3	1.3	1.4	1.4	1.5	1.5	1.5	1.6	1.6	1.6	1.7
208	265	265	Kurram Garhi P/	11	0	0	0	0	0	0	0	0	0	0	0
209	265	4451	Kurram Garhi132	132	0	0	0	0	0	0	0	0	0	0	0
210	266	266	Barikot	132	1.9	2	2	2.1	2.1	2.2	2.2	2.3	2.3	2.4	2.4
211	267	267	Oghi	132	18	18.4	18.7	19	19.3	19.6	19.9	20.2	20.5	20.8	21.1

Table 1-43: Category-wise Energy (kWh) and Maximum Demand (kW) of Substations for Year 2026-27 (Base Forecast)

Sr. No.	Grid Number	Name of Grid Station	KV	Unit	Domestic	Commercial	Public Lighting	Small Industry	M&L Industries	Tubewell		Traction	Total of Grid Station	Power Factor (%)	Reactive-Power (Mvar)
										Private	Public				
1	87	AMC Abbottabad	132	kWh	214206	76386	490	14328	32127	371	0	0	337907	0.90	27.00
				kW	38717	13807	177	1907	3132	90	0	0	55081		
2	150	AWT Nizampur	132	kWh	0	0	0	0	210653	0	0	0	210653	0.90	28.00
				kW	0	0	0	0	57112	0	0	0	57112		
3	1	Abbottabad	132	kWh	304107	105829	1155	21284	29015	445	0	0	461835	0.90	40.00
				kW	55898	20135	417	2833	7434	108	0	0	82686		
4	4452	Badaber	132	kWh	31079	3976	0	801	264	1601	0	0	37721	0.89	15.00
				kW	21065	3317	0	107	5905	390	0	0	29307		
5	4473	Baja Bam Khel	132	kWh	46131	6115	36	1550	2181	999	0	0	57012	0.90	7.00
				kW	13503	1551	14	220	622	266	0	0	15367		
6	14	Balakot	132	kWh	43898	4971	0	150	379	0	0	0	49397	0.90	6.00
				kW	11611	1198	0	20	97	0	0	0	11769		
7	4453	Band Kurai	132	kWh	152408	8102	0	13295	6570	6714	0	0	187089	0.89	21.00
				kW	38438	1997	0	1769	1680	1637	0	0	41254		
8	15	Bannu	132	kWh	197962	30366	0	20546	22068	5650	0	0	276592	0.89	94.00
				kW	153346	25332	0	2730	10237	1321	0	0	183827		
9	4468	Bannu-II	132	kWh	18592	3205	0	2161	2186	561	0	0	26704	0.89	10.00
				kW	15160	2814	0	307	1164	149	0	0	18615		
10	4481	Bara Road	132	kWh	76181	35095	735	9026	8678	218	0	0	129932	0.89	19.00
				kW	23861	10195	280	1282	2492	58	0	0	36259		
11	266	Barikot	132	kWh	11476	1161	0	224	148	555	0	0	13564	0.89	2.00
				kW	3889	420	0	30	38	135	0	0	3858		
12	4467	Batkhela	132	kWh	47745	7582	3	1948	7034	833	0	0	65146	0.90	9.00
				kW	16516	2623	1	277	2008	222	0	0	19482		

Table 1-43: Category-wise Energy (kWh) and Maximum Demand (kW) of Substations for Year 2026-27 (Base Forecast) (Contd...)

Sr. No.	Grid Number	Name of Grid Station	KV	Unit	Domestic	Commercial	Public Lighting	Small Industry	M&L Industries	Tubewell		Traction	Total of Grid Station	Power Factor (%)	Reactive-Power (Mvar)
										Private	Public				
13	13	Battal	132	kWh	110755	10625	0	3170	6072	0	0	0	130623	0.90	23.00
				kW	44486	5010	0	422	1560	0	0	0	46661		
14	4470	Behram Kili	132	kWh	54225	11037	367	2128	1939	316	0	0	70011	0.90	9.00
				kW	15098	3937	140	302	552	84	0	0	19107		
15	4448	Besham132	132	kWh	12684	1982	0	0	0	0	0	0	14666	0.90	3.00
				kW	6252	1075	0	0	0	0	0	0	6265		
16	135	Best Way Cement	132	kWh	0	0	0	0	123712	0	0	0	123712	0.90	16.00
				kW	0	0	0	0	33540	0	0	0	33540		
17	161	Cattar Class	132	kWh	501	167	0	167	0	0	0	0	835	0.88	0.00
				kW	155	60	0	22	0	0	0	0	238		
18	37	Chakdara	132	kWh	370140	52096	22	13433	51616	5759	0	0	493067	0.90	68.00
				kW	121639	17120	8	1784	13111	1397	0	0	140608		
19	65	Charsadda	132	kWh	268579	52350	146	4965	27550	1394	0	0	354984	0.90	70.00
				kW	121361	22709	53	660	7014	339	0	0	144958		
20	255	Chashma	132	kWh	22039	1819	0	1453	943	611	0	0	26865	0.89	5.00
				kW	10864	986	0	193	245	149	0	0	10686		
21	158	Cherat Cement	132	kWh	0	0	0	0	68829	0	0	0	68829	0.90	8.00
				kW	0	0	0	0	17416	0	0	0	17416		
22	4469	Chirat industrial	132	kWh	64159	10088	0	2721	3586	1038	0	0	81592	0.90	13.00
				kW	24414	3971	0	386	1024	277	0	0	27064		
23	33	Chitral H/P	11	kWh	7250	2237	0	57	0	0	0	0	9544	0.90	1.00
				kW	2246	809	0	8	0	0	0	0	2764		
24	4463	Chota Lahore	132	kWh	46131	6115	36	1550	2181	999	0	0	57012	0.90	7.00
				kW	13503	1551	14	220	622	266	0	0	15367		

Table 1-43: Category-wise Energy (kWh) and Maximum Demand (kW) of Substations for Year 2026-27 (Base Forecast) (Contd...)

Sr. No.	Grid Number	Name of Grid Station	KV	Unit	Domestic	Commercial	Public Lighting	Small Industry	M&L Industries	Tubewell		Traction	Total of Grid Station	Power Factor (%)	Reactive-Power (Mvar)
										Private	Public				
25	154	Consumer GS	132	kWh	0	0	0	0	118913	0	0	0	118913	0.90	16.00
				kW	0	0	0	0	32240	0	0	0	32240		
26	26	D.I KHAN	132	kWh	490774	58743	157	15028	65026	1215	0	0	630942	0.90	98.00
				kW	166322	27698	57	1994	16470	282	0	0	202815		
27	4471	D.I. Khan-II	132	kWh	52839	6806	20	1829	7415	139	0	0	69049	0.90	11.00
				kW	18850	3378	8	260	2116	37	0	0	23416		
28	41	Daggar	132	kWh	450988	48120	71	16859	157769	1749	0	0	675556	0.86	59.00
				kW	84325	8698	26	2243	14207	419	0	0	99786		
29	97	Dalazak	132	kWh	134324	11028	12	1133	5316	172	0	0	151985	0.90	32.00
				kW	73018	4196	4	161	1518	46	0	0	67102		
30	4447	Daraban	132	kWh	41645	2117	0	7104	529	302	0	0	51697	0.89	10.00
				kW	20529	1148	0	945	131	74	0	0	19518		
31	39	Dargai	132	kWh	47995	4466	2	872	193563	4259	0	0	251158	0.89	56.00
				kW	36526	2832	1	124	80345	1134	0	0	108866		
32	4483	Dargai-II	132	kWh	18480	1720	1	336	74529	1640	0	0	96705	0.89	18.00
				kW	8408	673	0	45	29386	415	0	0	35035		
33	4456	Darosh132	132	kWh	13683	1776	0	67	0	0	0	0	15527	0.90	1.00
				kW	2603	338	0	10	0	0	0	0	2656		
34	4454	Dir	132	kWh	74891	7345	0	275	414	0	0	0	82924	0.90	11.00
				kW	23205	2096	0	37	99	0	0	0	23012		
35	4479	Doaba	132	kWh	43522	5685	68	1654	917	315	0	0	52161	0.90	11.00
				kW	22583	2163	26	235	262	84	0	0	22818		
36	253	Dobian	132	kWh	61286	1683	0	1394	2241	1074	0	0	67678	0.90	17.00
				kW	39096	553	0	185	577	262	0	0	34966		

Table 1-43: Category-wise Energy (kWh) and Maximum Demand (kW) of Substations for Year 2026-27 (Base Forecast) (Contd...)

Sr. No.	Grid Number	Name of Grid Station	KV	Unit	Domestic	Commercial	Public Lighting	Small Industry	M&L Industries	Tubewell		Traction	Total of Grid Station	Power Factor (%)	Reactive-Power (Mvar)
										Private	Public				
37	102	Domail	132	kWh	112407	6122	0	13117	9865	4195	0	0	145706	0.89	49.00
				kW	101586	5532	0	1746	2605	1023	0	0	96191		
38	25	Gadoon Amazai	132	kWh	63546	3105	0	2151	410277	2270	0	0	481348	0.89	40.00
				kW	36270	1684	0	286	52260	554	0	0	78248		
39	166	Garam Chashma P/H	11	kWh	247	0	0	0	0	0	0	0	247	0.90	0.00
				kW	77	0	0	0	0	0	0	0	69		
40	4474	Garhi Habibullah	132	kWh	54291	7032	0	210	469	0	0	0	62002	0.90	7.00
				kW	15116	1784	0	30	134	0	0	0	15357		
41	252	Gomal University	132	kWh	40159	3353	0	729	6549	575	0	0	51364	0.90	11.00
				kW	20739	2273	0	97	1674	140	0	0	23702		
42	52	Gumbat	132	kWh	78177	6440	0	7276	2038	2516	0	0	96447	0.89	19.00
				kW	38537	2183	0	968	528	613	0	0	36803		
43	85	Gurguri	132	kWh	12864	383	0	20	0	24	0	0	13292	0.90	5.00
				kW	11625	347	0	3	0	6	0	0	10246		
44	48	Hangu	132	kWh	113143	12717	143	3717	2539	711	0	0	132971	0.90	27.00
				kW	55773	4597	52	492	593	170	0	0	56076		
45	3	Haripur	132	kWh	304554	71587	933	23332	73506	970	0	0	474882	0.89	49.00
				kW	63516	14930	337	3097	18372	134	0	0	95679		
46	4450	Haripur132	132	kWh	92766	12917	71	8184	18983	901	0	0	133822	0.89	17.00
				kW	25151	3417	26	1089	4625	220	0	0	32887		
47	4466	Hasan zai	132	kWh	19065	1840	0	334	3614	169	0	0	25022	0.90	7.00
				kW	14509	1400	0	47	1030	45	0	0	15329		
48	89	Hattar	132	kWh	38823	8738	0	7573	1505899	611	0	0	1561643	0.90	98.00
				kW	7017	1579	0	989	212767	148	0	0	202223		

Table 1-43: Category-wise Energy (kWh) and Maximum Demand (kW) of Substations for Year 2026-27 (Base Forecast) (Contd...)

Sr. No.	Grid Number	Name of Grid Station	KV	Unit	Domestic	Commercial	Public Lighting	Small Industry	M&L Industries	Tubewell		Traction	Total of Grid Station	Power Factor (%)	Reactive-Power (Mvar)
										Private	Public				
49	4488	Hattar-II	132	kWh	9258	1890	0	1712	301021	146	0	0	314026	0.90	21.00
				kW	1761	360	0	243	46709	39	0	0	44201		
50	124	Hattian	132	kWh	65637	27330	0	23972	0	0	0	0	116940	0.88	11.00
				kW	13689	5489	0	3190	0	0	0	0	20217		
51	4459	Havelian	132	kWh	117493	21916	163	4250	30884	442	0	0	175148	0.90	20.00
				kW	31078	7202	59	566	7526	108	0	0	42169		
52	121	Hayatabad	132	kWh	249749	20836	2391	9164	45555	0	0	0	327695	0.90	49.00
				kW	91968	5946	910	1302	13003	0	0	0	101816		
53	60	Hussai	132	kWh	266518	15656	0	8836	18357	6355	0	0	315721	0.90	45.00
				kW	87585	6792	0	1173	4977	1540	0	0	92147		
54	58	Jalala	132	kWh	338945	54462	1	8210	59091	2640	0	0	463349	0.90	63.00
				kW	114868	19688	0	1090	14185	640	0	0	130103		
55	43	Jamrud	132	kWh	95053	86553	2038	10410	601238	87	0	0	795377	0.89	76.00
				kW	17180	15644	737	1380	130158	21	0	0	149299		
56	4489	Jamrud-II	132	kWh	24101	23730	620	3008	162063	25	0	0	213547	0.89	23.00
				kW	4585	4515	236	427	39320	7	0	0	44181		
57	78	Jehangira	132	kWh	266571	46967	542	16365	163998	33214	0	0	527657	0.86	71.00
				kW	68831	11319	196	2178	41999	8100	0	0	120003		
58	4457	Jutilisht132	132	kWh	16288	1492	0	96	6	0	0	0	17882	0.90	3.00
				kW	5313	516	0	14	4	0	0	0	5262		
59	4485	Kabal	132	kWh	74513	16446	102	2418	13273	917	0	0	107669	0.90	11.00
				kW	18492	3353	39	343	3788	244	0	0	23632		
60	4464	Kaka Sahib	132	kWh	38911	11352	51	3902	7522	2254	0	0	63991	0.89	8.00
				kW	10095	3502	19	554	2146	600	0	0	16071		

Table 1-43: Category-wise Energy (kWh) and Maximum Demand (kW) of Substations for Year 2026-27 (Base Forecast) (Contd...)

Sr. No.	Grid Number	Name of Grid Station	KV	Unit	Domestic	Commercial	Public Lighting	Small Industry	M&L Industries	Tubewell		Traction	Total of Grid Station	Power Factor (%)	Reactive-Power (Mvar)
										Private	Public				
61	4492	Kala Dhaka	132	kWh	29323	8170	37	1209	2459	28	0	0	41226	0.90	5.00
				kW	7439	2073	14	172	704	7	0	0	9888		
62	50	Karak	132	kWh	141733	8830	0	15950	2859	1746	0	0	171118	0.89	44.00
				kW	85392	2386	0	2109	3846	419	0	0	85353		
63	62	Katlang	132	kWh	111894	7330	0	5891	5569	2130	0	0	132813	0.89	19.00
				kW	37921	3312	0	784	1420	519	0	0	37585		
64	4486	Khanpur	132	kWh	69450	17799	262	1217	17934	4648	0	0	111311	0.89	13.00
				kW	15246	3907	100	173	5117	1238	0	0	24493		
65	81	Kheshki	132	kWh	0	0	0	0	0	25328	0	0	25328	0.75	4.00
				kW	0	0	0	0	0	5966	0	0	5089		
66	94	Khwaza Khela	132	kWh	257582	21354	2	4303	13866	3446	0	0	300553	0.90	39.00
				kW	82159	6433	1	573	3554	840	0	0	80387		
67	46	Kohat	132	kWh	359781	76370	239	20062	35291	9874	0	0	501616	0.89	87.00
				kW	134542	29579	87	2666	8986	2310	0	0	169744		
68	47	Kohat	132	kWh	7243	1811	0	1	0	0	0	0	9054	0.90	2.00
				kW	3142	785	0	0	0	0	0	0	3741		
69	32	Kohat Cement	132	kWh	0	0	0	0	219872	0	0	0	219872	0.90	29.00
				kW	0	0	0	0	59612	0	0	0	59612		
70	251	Kotal Town Kohat	132	kWh	136377	38460	220	20199	5124	381	0	0	200760	0.89	31.00
				kW	47709	14382	80	2688	1312	93	0	0	59802		
71	4446	Kulachi	132	kWh	50121	1832	0	8895	0	770	0	0	61618	0.88	10.00
				kW	19412	552	0	1184	0	188	0	0	19256		
72	20	Kuram Garhi	132	kWh	40703	2100	0	4273	3099	56	0	0	50231	0.89	15.00
				kW	31530	1626	0	569	788	14	0	0	29806		

Table 1-43: Category-wise Energy (kWh) and Maximum Demand (kW) of Substations for Year 2026-27 (Base Forecast) (Contd...)

Sr. No.	Grid Number	Name of Grid Station	KV	Unit	Domestic	Commercial	Public Lighting	Small Industry	M&L Industries	Tubewell		Traction	Total of Grid Station	Power Factor (%)	Reactive-Power (Mvar)
										Private	Public				
73	4451	Kurram Garhi132	132	kWh	8138	494	0	1255	538	395	0	0	10820	0.88	1.00
				kW	2522	179	0	167	131	96	0	0	2645		
74	51	Lachi	132	kWh	108247	5192	0	7457	7578	2438	0	0	130912	0.89	32.00
				kW	65217	2815	0	992	1942	595	0	0	61499		
75	4493	Lakki	132	kWh	73193	4932	0	11309	3581	5706	0	0	98722	0.88	21.00
				kW	38259	1859	0	1607	1022	1520	0	0	39693		
76	4494	LalQila Maidan	132	kWh	10905	546	0	216	239	9	0	0	11914	0.90	1.00
				kW	2706	133	0	31	68	2	0	0	2499		
77	24	Locomotive	132	kWh	0	0	0	0	4528	0	0	0	4528	0.90	1.00
				kW	0	0	0	0	1227	0	0	0	1227		
78	4491	Lora	132	kWh	46300	11866	175	3415	11956	737	0	0	74448	0.89	8.00
				kW	10164	2605	67	485	3412	196	0	0	16082		
79	4475	Lund Khwar	132	kWh	48305	8333	0	1317	7994	422	0	0	66372	0.90	9.00
				kW	17232	3171	0	187	2282	112	0	0	19537		
80	42	Madyan	132	kWh	44015	2743	0	91	0	194	0	0	47044	0.90	7.00
				kW	15398	850	0	12	0	47	0	0	13945		
81	4476	Manga Dargai	132	kWh	27109	5658	17	562	2934	157	0	0	36436	0.90	8.00
				kW	12894	2583	7	80	838	42	0	0	15622		
82	2	Mansehra	132	kWh	362266	88303	376	13116	28596	306	0	0	492962	0.90	54.00
				kW	87304	21281	136	1739	7207	74	0	0	112194		
83	56	Mardan-1	132	kWh	467186	98967	4447	15664	125984	3069	0	0	715318	0.90	65.00
				kW	107798	21465	1608	2085	6606	748	0	0	133651		
84	57	Mardan-2	132	kWh	107131	17583	404	2877	3245	432	0	0	131672	0.90	17.00
				kW	28337	5959	146	365	701	93	0	0	34122		

Table 1-43: Category-wise Energy (kWh) and Maximum Demand (kW) of Substations for Year 2026-27 (Base Forecast) (Contd...)

Sr. No.	Grid Number	Name of Grid Station	KV	Unit	Domestic	Commercial	Public Lighting	Small Industry	M&L Industries	Tubewell		Traction	Total of Grid Station	Power Factor (%)	Reactive-Power (Mvar)
										Private	Public				
85	4460	Mardan-3	132	kWh	108449	22074	733	4257	3877	632	0	0	140022	0.90	19.00
				kW	30195	7874	279	605	1106	168	0	0	38216		
86	4478	Mardan-4	132	kWh	75915	15452	513	2980	2714	442	0	0	98015	0.90	13.00
				kW	21137	5512	195	423	776	118	0	0	26753		
87	77	Mattani	132	kWh	105648	3115	2	2171	734	5736	0	0	117405	0.89	51.00
				kW	76382	1299	1	289	37281	1399	0	0	100244		
88	153	Muree	132	kWh	97022	7680	2	832	4289	20	0	0	109845	0.90	15.00
				kW	30062	2776	1	81	618	1	0	0	30717		
89	123	Muzafar Abad	132	kWh	414496	180035	0	157600	51	0	0	0	752182	0.88	110.00
				kW	145003	48811	0	20973	0	0	0	0	204294		
90	4472	Naguman	132	kWh	24558	1835	0	310	2834	148	0	0	29684	0.90	9.00
				kW	19247	1396	0	44	874	40	0	0	18999		
91	88	Nathia Gali	132	kWh	31584	9401	25	1195	2636	0	0	0	44840	0.90	5.00
				kW	9014	3354	10	170	752	0	0	0	11304		
92	4477	Nawan Kili	132	kWh	69197	9172	54	2326	3272	1499	0	0	85518	0.90	11.00
				kW	20254	2327	20	330	936	399	0	0	23054		
93	8	Nishat Tarbela	132	kWh	92920	19669	587	6854	13117	1855	0	0	135002	0.89	14.00
				kW	20994	5079	212	912	3356	452	0	0	28030		
94	79	Nizampur	132	kWh	42913	2308	0	1381	2251	1917	0	0	50770	0.89	9.00
				kW	17899	1001	0	184	583	469	0	0	17354		
95	125	Nousery	132	kWh	26035	10841	0	9508	0	0	0	0	46384	0.88	6.00
				kW	8067	3359	0	1265	0	0	0	0	11472		
96	68	Nowshera City	132	kWh	345669	68818	223	29435	96705	12012	0	0	552863	0.89	79.00
				kW	107106	24075	81	3868	24764	2830	0	0	154961		

Table 1-43: Category-wise Energy (kWh) and Maximum Demand (kW) of Substations for Year 2026-27 (Base Forecast) (Contd...)

Sr. No.	Grid Number	Name of Grid Station	KV	Unit	Domestic	Commercial	Public Lighting	Small Industry	M&L Industries	Tubewell		Traction	Total of Grid Station	Power Factor (%)	Reactive-Power (Mvar)
										Private	Public				
97	69	Nowshera Industrial	132	kWh	163392	46529	178	15287	29733	8345	0	0	263464	0.89	32.00
				kW	40272	13638	64	1995	7497	2014	0	0	62402		
98	267	Oghi	132	kWh	92440	8883	0	1123	462	0	0	0	102908	0.90	17.00
				kW	30150	2305	0	160	3754	0	0	0	34549		
99	80	Pabbi	132	kWh	208124	29507	0	7411	10731	2841	0	0	258614	0.90	40.00
				kW	75235	11034	0	976	2632	673	0	0	82463		
100	4482	Panyala	132	kWh	35226	4538	13	1219	4943	93	0	0	46033	0.90	8.00
				kW	12566	2252	5	173	1410	25	0	0	15610		
101	4449	Pattan	132	kWh	5166	589	0	0	0	0	0	0	5756	0.90	2.00
				kW	3502	320	0	0	0	0	0	0	3449		
102	4445	Pesco Colony	132	kWh	116051	73049	877	12560	7386	223	0	0	210146	0.89	29.00
				kW	35358	20924	334	1784	2106	59	0	0	57536		
103	70	Peshawar Cantt	132	kWh	256583	169402	1469	26162	6076	988	0	0	460680	0.89	59.00
				kW	69564	45928	531	3457	1512	215	0	0	115601		
104	71	Peshawar City	132	kWh	406279	125223	1506	15324	48725	423	0	0	597482	0.90	72.00
				kW	110150	30864	544	2020	12297	94	0	0	148707		
105	72	Peshawar Fort	132	kWh	321410	237800	3171	40975	17375	240	0	0	620970	0.89	69.00
				kW	74162	56063	1146	5453	4455	55	0	0	134625		
106	75	Peshawar Industrial	132	kWh	415184	115343	4161	46228	81033	756	0	0	662705	0.89	94.00
				kW	132428	32917	1504	6056	19638	184	0	0	183642		
107	76	Peshawar University	132	kWh	443224	153113	1132	29205	20112	118	0	0	646905	0.90	85.00
				kW	137333	37738	409	3887	5154	28	0	0	175635		
108	18	Pezu	132	kWh	40762	3487	0	10152	9155	335	0	0	63891	0.85	20.00
				kW	31576	2521	0	1351	2341	82	0	0	32529		

Table 1-43: Category-wise Energy (kWh) and Maximum Demand (kW) of Substations for Year 2026-27 (Base Forecast) (Contd...)

Sr. No.	Grid Number	Name of Grid Station	KV	Unit	Domestic	Commercial	Public Lighting	Small Industry	M&L Industries	Tubewell		Traction	Total of Grid Station	Power Factor (%)	Reactive-Power (Mvar)
										Private	Public				
109	139	Prova	132	kWh	62668	3719	0	3654	6036	1810	0	0	77887	0.89	21.00
				kW	37756	3102	0	486	1551	441	0	0	41282		
110	7	R.B Tarbela	132	kWh	228147	35084	213	16868	96400	3457	0	0	380169	0.86	52.00
				kW	60346	8647	77	2245	24690	843	0	0	87672		
111	99	Rajar	132	kWh	65915	4044	0	411	651	35	0	0	71057	0.90	18.00
				kW	37623	1687	0	55	173	9	0	0	37645		
112	96	Rehman Baba	132	kWh	238437	33142	497	12374	7391	359	0	0	292200	0.90	54.00
				kW	103432	8985	180	1647	1808	84	0	0	110649		
113	4487	Rustam	132	kWh	41857	2479	0	1394	3068	1000	0	0	49797	0.90	7.00
				kW	14479	1132	0	198	876	266	0	0	15256		
114	4461	Sabir abad	132	kWh	29676	2009	0	3612	599	394	0	0	36290	0.89	10.00
				kW	18821	573	0	513	974	105	0	0	18887		
115	130	Sadi Cement	132	kWh	0	0	0	0	141105	0	0	0	141105	0.90	20.00
				kW	0	0	0	0	40270	0	0	0	40270		
116	59	Sakhi Chashma	132	kWh	81785	9257	0	11003	44434	82	0	0	146560	0.86	44.00
				kW	59129	7171	0	1464	18262	20	0	0	73844		
117	16	Sarai Naurang	132	kWh	98287	8150	0	7232	7712	11545	0	0	132926	0.89	40.00
				kW	75871	5893	0	962	1976	2815	0	0	78973		
118	83	Shabqadar	132	kWh	205336	19374	0	3186	36781	1522	0	0	266199	0.90	76.00
				kW	148454	14007	0	423	9325	385	0	0	156684		
119	74	Shahi Bagh	132	kWh	334445	110265	501	10499	43095	254	0	0	499059	0.90	79.00
				kW	116999	41234	181	1395	10985	62	0	0	162795		
120	159	Shahi Bagh	132	kWh	69807	2882	0	358	795	130	0	0	73972	0.90	21.00
				kW	47315	2233	0	48	146	32	0	0	43099		

Table 1-43: Category-wise Energy (kWh) and Maximum Demand (kW) of Substations for Year 2026-27 (Base Forecast) (Contd...)

Sr. No.	Grid Number	Name of Grid Station	KV	Unit	Domestic	Commercial	Public Lighting	Small Industry	M&L Industries	Tubewell		Traction	Total of Grid Station	Power Factor (%)	Reactive-Power (Mvar)
										Private	Public				
121	4480	Shakar Dara	132	kWh	31103	7063	24	1941	3216	902	0	0	44249	0.89	8.00
				kW	12243	2879	9	276	918	240	0	0	15738		
122	117	Shangla	132	kWh	58782	3071	0	21	79	0	0	0	61954	0.90	10.00
				kW	21982	1234	0	3	19	0	0	0	19872		
123	127	Sheikh Muhammadi	132	kWh	62382	2454	0	2044	685	2535	0	0	70100	0.89	29.00
				kW	56376	2217	0	272	182	618	0	0	56744		
124	4490	Shinkyari	132	kWh	58645	16341	73	2417	4919	56	0	0	82451	0.90	10.00
				kW	14877	4145	28	343	1402	15	0	0	19770		
125	4462	Siraj Baba	132	kWh	29676	2009	0	3612	599	394	0	0	36290	0.89	10.00
				kW	18821	573	0	513	974	105	0	0	18887		
126	61	Swabi	132	kWh	410134	46732	255	11905	18112	7700	0	0	494837	0.90	62.00
				kW	114046	11262	92	1574	4520	1846	0	0	127147		
127	92	Swat	132	kWh	523312	107584	603	15082	88174	5738	0	0	740493	0.90	75.00
				kW	123374	20834	218	2003	22387	1391	0	0	154352		
128	17	Tajazai	132	kWh	71655	4095	0	10428	3505	5384	0	0	95068	0.88	22.00
				kW	38854	1531	0	1367	842	1261	0	0	40002		
129	49	Tall	132	kWh	52690	8272	0	3524	879	471	0	0	65836	0.89	34.00
				kW	38094	5980	0	469	28595	115	0	0	66132		
130	84	Tangi	132	kWh	147371	12375	100	2935	1838	3923	0	0	168543	0.90	63.00
				kW	122939	8947	36	391	19446	957	0	0	131070		
131	22	Tank	132	kWh	106115	9443	0	19890	996	3782	0	0	140226	0.88	49.00
				kW	88523	8534	0	2647	258	922	0	0	91447		
132	90	Tarbela P/H	132	kWh	13404	5806	698	998	6852	0	0	0	27759	0.86	4.00
				kW	4153	2099	252	133	1748	0	0	0	7577		

Table 1-43: Category-wise Energy (kWh) and Maximum Demand (kW) of Substations for Year 2026-27 (Base Forecast) (Contd...)

Sr. No.	Grid Number	Name of Grid Station	KV	Unit	Domestic	Commercial	Public Lighting	Small Industry	M&L Industries	Tubewell		Traction	Total of Grid Station	Power Factor (%)	Reactive-Power (Mvar)
										Private	Public				
133	134	Tarnawa	132	kWh	19785	6236	0	6236	0	0	0	0	32256	0.88	5.00
				kW	6130	2254	0	828	0	0	0	0	9212		
134	4444	Taru Jabba	132	kWh	143353	37825	397	6985	12802	1188	0	0	202551	0.90	29.00
				kW	47451	11264	151	992	3654	317	0	0	59026		
135	4458	Thakot	132	kWh	33898	4317	0	60	1238	0	0	0	39513	0.90	8.00
				kW	16825	2240	0	8	354	0	0	0	16513		
136	34	Timergara	132	kWh	82326	3595	0	1427	1693	59	0	0	89100	0.90	9.00
				kW	19409	830	0	189	431	14	0	0	18098		
137	133	Timergara	132	kWh	272689	32714	8	7115	12768	253	0	0	325547	0.90	44.00
				kW	84493	11826	3	947	3269	62	0	0	90993		
138	155	Wah	132	kWh	17166	2195	0	2665	4028	346	0	0	26399	0.85	4.00
				kW	5319	793	0	350	1029	84	0	0	6528		
139	4455	Wari	132	kWh	66487	3862	0	736	1715	0	0	0	72800	0.90	9.00
				kW	21083	848	0	105	490	0	0	0	19146		
140	86	Warsak	132	kWh	101029	5399	1312	4324	709	122	0	0	112895	0.90	32.00
				kW	68477	3878	474	574	2998	29	0	0	65836		
141	4465	Warsak Road		kWh	56358	24359	566	5062	1006	161	0	0	87510	0.89	16.00
				kW	25614	7527	215	719	1032	43	0	0	31606		
		Total		GWh	16720	3457	37	1093	6260	259	0	0	27826		
				MW	3829	661	9	93	907	40	0	0	5095		

Disclaimer

CPPA-G centrally consolidated the data from all DISCOs. The data for this report has been provided by PESCO. So, the responsibility of accuracy of data is on PESCO. It is also important to mention here that CPPA-G only facilitated in the preparation of this forecast as it is the prime responsibility of the DISCOs to prepare their own forecast and the DISCO prepared the same.

Further, a transition plan has been prepared by CPPA-G to help build the overall capacity of the DISCOs in-terms of people, processes and technology so that DISCOs start doing this forecast without any assistance.

Table 1-36: Monthly Peak Demand Forecast (Base Forecast)

Year	July (MW)	August (MW)	September (MW)	October (MW)	November (MW)	December (MW)	January (MW)	February (MW)	March (MW)	April (MW)	May (MW)	June (MW)
2016-17	2726	2329	2230	2611	2087	2228	2293	1950	1806	2236	2909	3206
2017-18	3338	3025	3113	3011	2618	3095	3000	2516	2553	2985	3349	3636
2018-19	3487	3160	3251	3145	2735	3232	3134	2628	2666	3118	3498	3798
2019-20	3628	3288	3383	3272	2845	3363	3260	2735	2774	3244	3640	3952
2020-21	3769	3416	3515	3400	2956	3494	3388	2841	2883	3371	3782	4106
2021-22	3912	3546	3648	3529	3068	3627	3516	2949	2992	3499	3925	4262
2022-23	4056	3676	3782	3658	3181	3760	3645	3057	3102	3627	4069	4418
2023-24	4204	3811	3920	3792	3298	3898	3778	3169	3215	3760	4218	4580
2024-25	4359	3951	4065	3932	3419	4041	3917	3286	3333	3898	4373	4748
2025-26	4520	4097	4215	4077	3545	4190	4062	3407	3456	4042	4535	4924
2026-27	4677	4239	4361	4218	3668	4336	4203	3525	3576	4183	4692	5095

Table 1-37: Monthly Energy Purchased Forecast (Base Forecast)

Year	July	August	September	October	November	December	January	February	March	April	May	June	Total
	GWh	GWh	GWh	GWh	GWh	GWh	GWh	GWh	GWh	GWh	GWh	GWh	GWh
2016-17	2010	1954	1901	1611	1413	1562	1596	1409	1431	1519	1927	2124	**20458**
2017-18	2099	2041	1985	1683	1476	1632	1667	1471	1495	1587	2012	2218	**21366**
2018-19	2174	2114	2056	1743	1529	1690	1727	1524	1548	1644	2085	2298	**22132**
2019-20	2240	2179	2119	1796	1575	1742	1779	1571	1595	1694	2148	2368	**22805**
2020-21	2307	2244	2183	1850	1622	1794	1833	1618	1643	1744	2212	2439	**23489**
2021-22	2376	2310	2247	1905	1670	1847	1887	1665	1692	1796	2278	2511	**24183**
2022-23	2445	2378	2313	1960	1719	1901	1942	1714	1741	1848	2344	2584	**24889**
2023-24	2515	2446	2379	2017	1768	1955	1998	1763	1791	1902	2412	2659	**25606**
2024-25	2587	2516	2447	2074	1819	2011	2055	1814	1842	1956	2480	2734	**26334**
2025-26	2660	2586	2516	2132	1870	2068	2113	1865	1894	2011	2550	2811	**27074**
2026-27	2733	2658	2586	2191	1922	2125	2171	1916	1947	2067	2621	2889	**27826**

Table 1-38: List of Overloaded Substations during Period 2016-17 to 2026-27 Overloading Criterion= 85%

Sr.No.	Name	Rating KV	Grid #	Total Capacity (MVA)	Total Capacity (MW)	Overloading Criterion (MW)	Overloading Criterion (%)	Year of Overloading	Overloading Status (MW)	Power Factor (%)
1	Abbottabad	132	1	65	58.50	49.73	85.00	2023-24	48.70	0.90
2	Mansehra	132	2	92	82.80	70.38	85.00	2024-25	69.40	0.90
3	R.B Tarbela	132	7	65	55.90	47.52	85.00	2020-21	46.60	0.86
4	Bannu	132	15	132	117.48	99.86	85.00	2019-20	97.70	0.89
5	Sarai Naurang	132	16	52	46.28	39.34	85.00	2016-17	39.50	0.89
6	Pezu	132	18	26	22.10	18.79	85.00	2021-22	18.50	0.85
7	Kuram Garhi	66	20	19.3	17.18	14.60	85.00	2017-18	14.10	0.89
8	Daggar	132	41	92	79.12	67.25	85.00	2025-26	64.70	0.86
9	Kohat	132	46	143.5	127.72	108.56	85.00	2024-25	104.90	0.89
10	Lachi	132	51	52	46.28	39.34	85.00	2024-25	38.80	0.89
11	Mardan-1	220	56	80	72.00	61.20	85.00	2016-17	59.80	0.90
12	Jalala	132	58	92	82.80	70.38	85.00	2020-21	68.30	0.90
13	Sakhi Chashma	132	59	52	44.72	38.01	85.00	2018-19	37.40	0.86
14	Katlang	132	62	26	23.14	19.67	85.00	2017-18	19.20	0.89
15	Charsadda	132	65	92	82.80	70.38	85.00	2016-17	71.60	0.90
16	Nowshera City	132	68	111	98.79	83.97	85.00	2020-21	81.90	0.89
17	Nowshera Indust	132	69	52	46.28	39.34	85.00	2024-25	38.60	0.89
18	Peshawar City	132	71	120	108.00	91.80	85.00	2023-24	88.60	0.90
19	Peshawar Fort	132	72	80	71.20	60.52	85.00	2017-18	59.50	0.89
20	Peshawar Indust	132	75	120	106.80	90.78	85.00	2018-19	87.80	0.89
21	Peshawar Univer	132	76	120	108.00	91.80	85.00	2019-20	90.40	0.90
22	Mattani	132	77	70.4	62.66	53.26	85.00	2019-20	52.90	0.89
23	Jehangira	132	78	78	67.08	57.02	85.00	2017-18	56.40	0.86
24	Nizampur	132	79	13	11.57	9.83	85.00	2021-22	9.60	0.89

Table 1-38: List of Overloaded Substations during Period 2016-17 to 2026-27 Overloading Criterion= 85% (Contd...)

Sr.No.	Name	Rating KV	Grid #	Total Capacity (MVA)	Total Capacity (MW)	Overloading Criterion (MW)	Overloading Criterion (%)	Year of Overloading	Overloading Status (MW)	Power Factor (%)
25	Kheshki	66	81	2.5	1.88	1.59	85.00	2016-17	3.60	0.75
26	Warsak	132	86	52	46.80	39.78	85.00	2023-24	39.40	0.90
27	Hattar	132	89	160	144.00	122.40	85.00	2023-24	119.70	0.90
28	Khwaza Khela	132	94	52	46.80	39.78	85.00	2017-18	39.30	0.90
29	Rajar	132	99	26	23.40	19.89	85.00	2018-19	19.30	0.90
30	Domail	220	102	66	58.74	49.93	85.00	2017-18	49.50	0.89
31	Muzafar Abad	132	123	75	66.00	56.10	85.00	2016-17	96.30	0.88
32	Hattian	132	124	13	11.44	9.72	85.00	2017-18	9.50	0.88
33	Sheikh Muhammad	500	127	39	34.71	29.50	85.00	2016-17	29.20	0.89
34	Muree	132	153	0	0.00	0.00	85.00	2016-17	5.10	0.90
35	Shahi Bagh	220	159	26	23.40	19.89	85.00	2016-17	23.00	0.90

Table 1-39: List of Overloaded Substations during Period 2016-17 to 2026-27 Overloading Criterion=100%

Sr.No.	Name	Rating KV	Grid #	Total Capacity (MVA)	Total Capacity (MW)	Overloading Criterion (MW)	Overloading Criterion (%)	Year of Overloading	Overloading Status (MW)	Power Factor (%)
1	R.B Tarbela	132	7	65	55.90	55.90	100.00	2025-26	55.50	0.86
2	Bannu	132	15	132	117.48	117.48	100.00	2023-24	114.30	0.89
3	Sarai Naurang	132	16	52	46.28	46.28	100.00	2022-23	45.60	0.89
4	Kuram Garhi	66	20	19.3	17.18	17.18	100.00	2021-22	16.60	0.89
5	Mardan-1	220	56	80	72.00	72.00	100.00	2020-21	71.00	0.90
6	Jalala	132	58	92	82.80	82.80	100.00	2024-25	81.10	0.90
7	Sakhi Chashma	132	59	52	44.72	44.72	100.00	2023-24	44.00	0.86
8	Katlang	132	62	26	23.14	23.14	100.00	2024-25	22.80	0.89
9	Charsadda	132	65	92	82.80	82.80	100.00	2021-22	79.80	0.90
10	Nowshera City	132	68	111	98.79	98.79	100.00	2025-26	98.40	0.89
11	Peshawar Fort	132	72	80	71.20	71.20	100.00	2020-21	68.80	0.89
12	Peshawar Indust	132	75	120	106.80	106.80	100.00	2022-23	104.70	0.89
13	Peshawar Univer	132	76	120	108.00	108.00	100.00	2024-25	106.50	0.90
14	Mattani	132	77	70.4	62.66	62.66	100.00	2024-25	62.50	0.89
15	Jehangira	132	78	78	67.08	67.08	100.00	2021-22	66.00	0.86
16	Kheshki	66	81	2.5	1.88	1.88	100.00	2016-17	3.60	0.75
17	Khwaza Khela	132	94	52	46.80	46.80	100.00	2022-23	46.40	0.90
18	Rajar	132	99	26	23.40	23.40	100.00	2024-25	23.10	0.90

Table 1-39: List of Overloaded Substations during Period 2016-17 to 2026-27 Overloading Criterion= 100% (Contd....)

Sr.No.	Name	Rating KV	Grid #	Total Capacity (MVA)	Total Capacity (MW)	Overloading Criterion (MW)	Overloading Criterion (%)	Year of Overloading	Overloading Status (MW)	Power Factor (%)
19	Domail	220	102	66	58.74	58.74	100.00	2024-25	58.60	0.89
20	Muzafar Abad	132	123	75	66.00	66.00	100.00	2016-17	96.30	0.88
21	Hattian	132	124	13	11.44	11.44	100.00	2022-23	11.40	0.88
22	Sheikh Muhammad	500	127	39	34.71	34.71	100.00	2023-24	34.30	0.89
23	Muree	132	153	0	0.00	0.00	100.00	2016-17	5.10	0.90
24	Shahi Bagh	220	159	26	23.40	23.40	100.00	2020-21	23.00	0.90

Table 1-40: List of Grids with their Codes and MVA Capacities

Sr. No.	Grid No.	KV	Grid Name	Transformer (MVA)				Total (MVA)
				T1	T2	T3	T4	
1	1	132	Abbottabad	26	13	26	0	65
3	3	132	Haripur	0	0	40	26	66
5	6	66	Havelian	13	13	0	0	26
7	8	132	NishatTarbel	15	13	0	0	28
9	13	132	Battal	26	13	26	0	65
11	15	132	Bannu	0	26	26	40	92
13	17	132	Tajazai	0	0	26	26	52
15	20	66	Kuram Garhi	6.3	13	0	0	19.3
17	23	66	Kulachi	13	0	0	0	13
19	26	132	D.I KHAN	40	40	40	40	160
21	36	66	Wari	13	13	0	0	26
23	39	132	Dargai	0	40	26	40	106
25	42	132	Madyan	26	0	0	0	26
27	46	132	Kohat	40	40	37.5	26	143.5
29	48	132	Hangu	0	0	26	26	52
31	50	132	Karak	26	26	26	0	78
33	52	132	Gumbat	13	26	0	0	39
35	57	132	Mardan-2	40	40	0	0	80

Sr. No.	Grid No.	KV	Grid Name	Transformer (MVA)				Total (MVA)
				T1	T2	T3	T4	
2	2	132	Mansehra	26	40	26	0	92
4	4	66	Haripur	5.6	6.3	13	0	24.9
6	7	132	R.B Tarbela	26	26	13	0	65
8	12	33	Pattan	4	0	0	0	4
10	14	132	Balakot	26	0	0	0	26
12	16	132	Sarai Naurang	26	26	0	0	52
14	18	132	Pezu	0	13	13	0	26
16	22	132	Tank	13	40	26	26	105
18	25	132	GadoonAmaz	26	26	26	26	104
20	34	66	Timergara	6.3	13	0	0	19.3
22	37	132	Chakdara	40	40	26	26	132
24	41	132	Daggar	26	26	40	0	92
26	43	132	Jamrud	40	40	26	40	146
28	47	66	Kohat	6.3	3	0	0	9.3
30	49	132	Tall	37.5	26	26	0	89.5
32	51	132	Lachi	26	26	0	0	52
34	56	220	Mardan-1	40	40	0	0	80
36	58	132	Jalala	0	0	40	26	66

Table 1-40: List of Grids with their Codes and MVA Capacities (Contd...)

Sr. No.	Grid No.	KV	Grid Name	Transformer (MVA)				Total (MVA)
				T1	T2	T3	T4	
37	59	132	Sakhi Chashma	26	26	0	0	52
39	61	132	Swabi	26	40	40	26	132
41	65	132	Charsadda	26	40	26	0	92
43	69	132	NowsheraIndus	26	26	0	0	52
45	71	132	Peshawar City	40	40	40	0	120
47	73	66	Badaber	7.5	10	0	0	17.5
49	75	132	PeshawarIndus	40	40	40	0	120
51	77	132	Mattani	5.4	26	26	13	70.4
53	79	132	Nizampur	13	0	0	0	13
55	81	66	Kheshki	2.5	0	0	0	2.5
57	84	132	Tangi	26	40	26	26	118
59	86	132	Warsak	26	26	0	0	52
61	88	132	Nathia Gali	13	0	0	0	13
63	91	66	Dir	13	6.3	5	0	24.3
65	94	132	Khwaza Khela	26	26	0	0	52
67	97	132	Dalazak	26	26	26	0	78
69	102	220	Domail	26	40	0	0	66
71	121	132	Hayatabad	40	26	40	0	106

Sr. No.	Grid No.	KV	Grid Name	Transformer (MVA)				Total (MVA)
				T1	T2	T3	T4	
38	60	132	Hussai	26	26	26	0	78
40	62	132	Katlang	26	0	0	0	26
42	68	132	Nowshera City	40	5	40	26	111
44	70	132	PeshawarCant	40	40	26	26	132
46	72	132	Peshawar Fort	40	40	0	0	80
48	74	132	Shahi Bagh	26	37.5	40	40	143.5
50	76	132	PeshawarUniv	40	40	40	0	120
52	78	132	Jehangira	26	26	26	0	78
54	80	132	Pabbi	40	26	26	0	92
56	83	132	Shabqadar	13	40	40	26	119
58	85	132	Gurguri	13	0	0	0	13
60	87	132	AMCAbbottab	26	26	0	0	52
62	89	132	Hattar	40	40	40	40	160
64	92	66	Swat	26	40	40	7.6	113.6
66	96	132	Rehman Baba	40	40	26	0	106
68	99	132	Rajar	26	0	0	0	26
70	117	132	Shangla	7.6	13	0	0	20.6
72	123	132	Muzafar Abad	10	26	13	26	75

Table 1-40: List of Grids with their Codes and MVA Capacities (Contd...)

Sr. No.	Grid No.	KV	Grid Name	Transformer (MVA)				Total (MVA)
				T1	T2	T3	T4	
73	124	132	Hattian	13	0	0	0	13
75	127	500	Sheikh Muhammad	26	13	0	0	39
77	136	33	Thakot	4	4	4	0	12
79	138	66	Daraban	13	0	0	0	13
81	153	132	Muree	0	0	0	0	0
83	171	33	Darosh	1.5	0	0	0	1.5
85	251	132	Kotal Town Koha	40	26	0	0	66
87	253	132	Dobian	13	26	0	0	39
89	266	132	Barikot	26	26	0	0	52

Sr. No.	Grid No.	KV	Grid Name	Transformer (MVA)				Total (MVA)
				T1	T2	T3	T4	
74	125	132	Nousery	13	0	0	0	13
76	133	132	Timergara	40	26	13	26	105
78	137	66	Bandkuri	13	13	0	0	26
80	139	132	Prova	13	0	26	0	39
82	159	220	Shahi Bagh	13	13	0	0	26
84	176	33	Jutilasht	4	4	0	0	8
86	252	132	Gomal Universit	26	26	0	0	52
88	254	132	Besham	4	0	0	0	4
90	267	132	Oghi	13	26	0	0	39

Table 1-41: Maximum Demand (MW) of Substations (Base Forecast)

Sr.No.	Grid No.	Name of Grid Station	KV	Year										
				2016-17	2017-18	2018-19	2019-20	2020-21	2021-22	2022-23	2023-24	2024-25	2025-26	2026-27
1	127	Sheikh Muhammad	500	29.2	29.9	30.6	31.3	32	32.8	33.5	34.3	35	35.8	36.6
2	102	Domail	220	48.2	49.5	50.8	52.1	53.3	54.6	55.9	57.3	58.6	60	61.3
3	56	Mardan-1	220	59.8	62.6	65.4	68.2	71	73.9	76.8	79.7	82.7	85.7	88.8
4	159	Shahi Bagh	220	23	24	21	22	23	24.1	25.1	26.1	27.2	28.3	29.4
5	87	AMC Abbottabad	132	23.8	25	26.1	27.3	28.5	29.7	30.9	32.2	33.5	34.7	36.1
6	150	AWT Nizampur	132	34.9	34.9	34.9	34.9	34.9	34.9	34.9	34.9	34.9	34.9	34.9
7	4452	Badaber	132	0	0	14.8	15.4	15.9	16.5	17.1	17.7	18.3	18.9	19.5
8	4473	Baja Bam Khel	132	0	0	8.3	8.4	8.5	8.7	8.8	9	9.1	9.2	9.4
9	14	Balakot	132	12.9	13.3	5.5	5.8	6.1	6.5	6.8	7.1	7.5	7.8	8.2
10	4453	Band Kurai	132	0	0	0	21.4	22.2	23.1	23.9	24.8	25.7	26.5	27.4
11	15	Bannu	132	95.4	99.8	93.7	97.7	101.8	105.9	110.1	114.3	118.6	122.9	127.3
12	4468	Bannu-II	132	0	0	10.4	10.6	10.8	11	11.1	11.3	11.5	11.8	12
13	4481	Bara Road	132	0	0	18.8	19.2	19.6	20	20.4	20.9	21.3	21.8	22.2
14	266	Barikot	132	1.9	2	2	2.1	2.1	2.2	2.2	2.3	2.3	2.4	2.4
15	4467	Batkhela	132	0	0	10.4	10.6	10.8	10.9	11.1	11.3	11.5	11.7	11.9
16	13	Battal	132	21	22	23	24	24.9	25.9	26.9	27.9	28.9	30	31
17	4470	Behram Kili	132	0	0	10.4	10.6	10.8	11	11.2	11.4	11.6	11.8	12
18	254	Besham	132	3.1	3.2	0	0	0	0	0	0	0	0	0
19	4448	Besham132	132	0	0	3.2	3.3	3.4	3.5	3.6	3.7	3.8	3.9	4
20	135	Best Way Cement	132	20.5	20.5	20.5	20.5	20.5	20.5	20.5	20.5	20.5	20.5	20.5
21	161	Cattar Class	132	0.1	0.1	0.1	0.1	0.1	0.1	0.1	0.1	0.1	0.1	0.2
22	37	Chakdara	132	71.8	75.3	68.3	71.4	74.5	77.6	80.8	84	87.2	90.5	93.8
23	65	Charsadda	132	71.6	75.1	70.1	73.3	76.5	79.8	83.1	86.4	89.8	93.3	96.7

Table 1-41: Maximum Demand (MW) of Substations (Base Forecast) (Contd....)

Sr.No.	Grid No.	Name of Grid Station	KV	Year										
				2016-17	2017-18	2018-19	2019-20	2020-21	2021-22	2022-23	2023-24	2024-25	2025-26	2026-27
24	255	Chashma	132	5	5.2	5.4	5.6	5.8	6	6.2	6.4	6.6	6.8	7
25	158	Cherat Cement	132	10	10.1	10.2	10.3	10.4	10.5	10.6	10.7	10.8	10.9	11
26	4469	Chirat industri	132	0	0	14.5	14.7	15	15.2	15.5	15.7	16	16.3	16.6
27	4463	Chota Lahore	132	0	0	8.3	8.4	8.5	8.7	8.8	9	9.1	9.2	9.4
28	154	Consumer GS	132	19.7	19.7	19.7	19.7	19.7	19.7	19.7	19.7	19.7	19.7	19.7
29	26	D.I KHAN	132	108.1	113.4	97.7	102.3	106.9	111.6	116.3	121.1	126	131	136
30	4471	D.I. Khan-II	132	0	0	12.5	12.7	12.9	13.1	13.4	13.6	13.8	14.1	14.3
31	41	Daggar	132	59.3	62.9	47.9	50.2	52.5	54.9	57.3	59.8	62.2	64.7	67.3
32	97	Dalazak	132	35.5	36.1	36.6	37.1	37.7	38.2	38.8	39.3	39.9	40.5	41
33	4447	Daraban	132	0	0	10.2	10.5	10.7	11	11.3	11.5	11.8	12.1	12.4
34	39	Dargai	132	51.8	54.8	56.8	58	59.1	60.3	61.5	62.8	64	65.3	66.6
35	4483	Dargai-II	132	0	0	18.2	18.6	18.9	19.3	19.7	20.1	20.6	21	21.4
36	4456	Darosh132	132	0	0	0	1.5	1.5	1.5	1.5	1.5	1.6	1.6	1.6
37	4454	Dir	132	0	0	0	12.1	12.5	12.9	13.3	13.7	14.1	14.5	15
38	4479	Doaba	132	0	0	12.4	12.6	12.7	12.9	13.1	13.3	13.5	13.7	14
39	253	Dobian	132	16.8	17.4	18	18.6	19.2	19.8	20.4	21.1	21.7	22.3	23
40	25	Gadoon Amazai	132	34	36.5	38.5	40	41.5	43.1	44.6	46.2	47.8	49.4	51.1
41	4474	Garhi Habibulla	132	0	0	8.3	8.4	8.6	8.7	8.8	9	9.1	9.2	9.4
42	252	Gomal Universit	132	11.7	12	12.4	12.7	13	13.3	13.6	14	14.3	14.6	15
43	52	Gumbat	132	17.4	18.1	18.7	19.3	20	20.6	21.3	22	22.6	23.3	24
44	85	Gurguri	132	5.2	5.3	5.4	5.6	5.7	5.8	6	6.1	6.2	6.4	6.5
45	48	Hangu	132	35.8	37.4	26.7	28.1	29.5	31	32.5	33.9	35.4	37	38.5
46	3	Haripur	132	60	63.3	45.2	47.4	49.8	52.1	54.5	56.9	59.4	61.9	64.4

Table 1-41: Maximum Demand (MW) of Substations (Base Forecast) (Contd....)

Sr.No.	Grid No.	Name of Grid Station	KV	Year										
				2016-17	2017-18	2018-19	2019-20	2020-21	2021-22	2022-23	2023-24	2024-25	2025-26	2026-27
47	4450	Haripur132	132	0	0	16.1	16.8	17.5	18.2	18.9	19.6	20.3	21	21.7
48	4466	Hasan zai	132	0	0	8.3	8.4	8.5	8.7	8.8	9	9.1	9.2	9.4
49	89	Hattar	132	94.3	105.3	91.3	96.8	102.4	108.1	113.8	119.7	125.7	131.8	138
50	4488	Hattar-II	132	0	0	22.6	23.1	23.6	24.2	24.7	25.3	25.8	26.4	27
51	124	Hattian	132	9.2	9.5	9.9	10.3	10.6	11	11.4	11.8	12.2	12.6	13
52	4459	Havelian	132	0	0	20.4	21.3	22.2	23.1	24	25	25.9	26.9	27.9
53	121	Hayatabad	132	53	54.1	55.1	55.9	56.8	57.7	58.6	59.5	60.4	61.3	62.3
54	60	Hussai	132	53.4	54.9	48	49.3	50.6	51.8	53.1	54.5	55.8	57.1	58.5
55	58	Jalala	132	65.7	69.2	62.2	65.2	68.3	71.4	74.6	77.8	81.1	84.4	87.7
56	43	Jamrud	132	81.7	88.7	71.6	74.4	77.4	80.4	83.4	86.5	89.7	92.9	96.2
57	4489	Jamrud-II	132	0	0	22.4	22.9	23.5	24	24.6	25.2	25.7	26.3	27
58	78	Jehangira	132	53.3	56.4	59.1	61.4	63.7	66	68.4	70.8	73.3	75.7	78.2
59	4457	Jutilisht132	132	0	0	0	2.9	2.9	3	3	3.1	3.1	3.2	3.2
60	4485	Kabal	132	0	0	12.6	12.8	13	13.2	13.5	13.7	13.9	14.2	14.5
61	4464	Kaka Sahib	132	0	0	8.4	8.5	8.7	8.9	9.1	9.3	9.4	9.6	9.8
62	4492	Kala Dhaka	132	0	0	5.2	5.3	5.4	5.5	5.6	5.7	5.8	5.9	6
63	50	Karak	132	58.9	61	42.5	44.2	46	47.7	49.5	51.3	53.1	54.9	56.7
64	62	Katlang	132	18.7	19.2	19.7	20.2	20.7	21.2	21.8	22.3	22.8	23.4	23.9
65	4486	Khanpur	132	0	0	12.7	12.9	13.2	13.4	13.7	13.9	14.2	14.5	14.7
66	94	Khwaza Khela	132	37.9	39.3	40.7	42.1	43.6	45	46.4	47.9	49.4	50.8	52.4
67	46	Kohat	132	82.5	86.5	82	85.7	89.4	93.2	97.1	100.9	104.9	108.9	113
68	32	Kohat Cement	132	36.5	36.5	36.5	36.5	36.5	36.5	36.5	36.5	36.5	36.5	36.5
69	251	Kotal Town Koha	132	28.5	29.4	30.2	31.1	32	32.9	33.8	34.7	35.7	36.6	37.6

Table 1-41: Maximum Demand (MW) of Substations (Base Forecast) (Contd....)

Sr.No.	Grid No.	Name of Grid Station	KV	Year										
				2016-17	2017-18	2018-19	2019-20	2020-21	2021-22	2022-23	2023-24	2024-25	2025-26	2026-27
70	4446	Kulachi	132	0	0	10.2	10.4	10.6	10.9	11.1	11.4	11.7	11.9	12.2
71	4451	Kurram Garhi132	132	0	0	1.4	1.4	1.5	1.5	1.5	1.6	1.6	1.6	1.7
72	51	Lachi	132	29.9	31	32.1	33.2	34.3	35.4	36.6	37.7	38.8	40	41.2
73	4493	Lakki	132	0	0	21.6	21.9	22.2	22.6	22.9	23.2	23.6	23.9	24.3
74	4494	LalQila Maidan	132	0	0	1.4	1.4	1.4	1.4	1.4	1.5	1.5	1.5	1.5
75	24	Locomotive	132	0.8	0.8	0.8	0.8	0.8	0.8	0.8	0.8	0.8	0.8	0.8
76	4491	Lora	132	0	0	8.4	8.6	8.7	8.9	9.1	9.2	9.4	9.6	9.8
77	4475	Lund Khwar	132	0	0	10.4	10.6	10.8	11	11.1	11.3	11.5	11.7	11.9
78	42	Madyan	132	7	7.2	7.4	7.6	7.7	7.9	8.1	8.3	8.5	8.7	8.9
79	4476	Manga Dargai	132	0	0	8.3	8.5	8.6	8.8	8.9	9.1	9.2	9.4	9.6
80	2	Mansehra	132	63.2	66.2	53.5	56.1	58.7	61.3	64	66.7	69.4	72.2	75
81	57	Mardan-2	132	54.1	56.6	13.4	15	16.7	18.4	20.1	21.8	23.5	25.2	27
82	4460	Mardan-3	132	0	0	20.7	21.1	21.5	21.9	22.3	22.7	23.2	23.6	24
83	4478	Mardan-4	132	0	0	14.5	14.8	15.1	15.3	15.6	15.9	16.2	16.5	16.8
84	77	Mattani	132	46.2	48.8	51.1	52.9	54.8	56.7	58.6	60.5	62.5	64.4	66.4
85	153	Muree	132	5.1	7.2	9.3	11.5	13.6	15.8	18	20.2	22.4	24.7	26.9
86	123	Muzafar Abad	132	96.3	99.4	102.5	105.6	108.8	112.1	115.5	118.9	122.4	125.9	129.6
87	4472	Naguman	132	0	0	10.3	10.5	10.6	10.8	11	11.1	11.3	11.5	11.6
88	88	Nathia Gali	132	5.6	5.8	5.9	6	6.1	6.2	6.4	6.5	6.6	6.8	6.9
89	4477	Nawan Kili	132	0	0	12.4	12.6	12.8	13	13.2	13.4	13.7	13.9	14.1
90	8	Nishat Tarbela	132	12.9	13.5	14	14.5	14.9	15.4	16	16.5	17	17.5	18.1
91	79	Nizampur	132	8	8.3	8.5	8.8	9.2	9.6	10	10.3	10.7	11.1	11.5
92	125	Nousery	132	5.2	5.4	5.6	5.8	6	6.2	6.5	6.7	6.9	7.1	7.4

Table 1-41: Maximum Demand (MW) of Substations (Base Forecast) (Contd....)

Sr.No.	Grid No.	Name of Grid Station	KV	Year										
				2016-17	2017-18	2018-19	2019-20	2020-21	2021-22	2022-23	2023-24	2024-25	2025-26	2026-27
93	68	Nowshera City	132	68.6	72.2	75.6	78.7	81.9	85.1	88.3	91.7	95	98.4	101.9
94	69	Nowshera Indust	132	34.2	36	29.4	30.9	32.4	33.9	35.4	37	38.6	40.2	41.9
95	267	Oghi	132	18	18.4	18.7	19	19.3	19.6	19.9	20.2	20.5	20.8	21.1
96	80	Pabbi	132	62.1	65	37.9	40.2	42.6	45.1	47.5	50	52.5	55	57.6
97	4482	Panyala	132	0	0	8.3	8.5	8.6	8.8	8.9	9.1	9.2	9.4	9.5
98	4449	Pattan	132	0	0	1.8	1.9	1.9	1.9	2	2	2.1	2.1	2.2
99	4445	Pesco Colony	132	0	0	29.4	30.1	30.8	31.4	32.2	32.9	33.6	34.4	35.2
100	70	Peshawar Cantt	132	71.6	75.3	51.9	55.1	58.4	61.8	65.2	68.7	72.3	75.9	79.6
101	71	Peshawar City	132	87.8	92.3	69.4	73.2	76.9	80.8	84.7	88.6	92.7	96.8	100.9
102	72	Peshawar Fort	132	56.4	59.5	62.5	65.6	68.8	72	75.3	78.7	82.1	85.7	89.3
103	75	Peshawar Indust	132	89	93.7	87.8	91.9	96.1	100.4	104.7	109.1	113.5	118.1	122.7
104	76	Peshawar Univer	132	81.2	84.3	87.3	90.4	93.5	96.7	99.9	103.2	106.5	109.9	113.3
105	18	Pezu	132	15.5	16.1	16.7	17.3	17.9	18.5	19.1	19.7	20.3	20.9	21.5
106	139	Prova	132	18.8	19.6	20.5	21.3	22.1	23	23.8	24.7	25.6	26.5	27.4
107	7	R.B Tarbela	132	39	41.2	43.1	44.8	46.6	48.3	50.1	51.9	53.7	55.5	57.4
108	99	Rajar	132	18.1	18.7	19.3	19.9	20.6	21.2	21.8	22.5	23.1	23.8	24.5
109	96	Rehman Baba	132	50	52.3	54.6	56.9	59.2	61.6	63.9	66.3	68.8	71.2	73.7
110	4487	Rustam	132	0	0	8.3	8.4	8.5	8.7	8.8	8.9	9.1	9.2	9.3
111	4461	Sabir abad	132	0	0	10.3	10.5	10.6	10.8	10.9	11.1	11.2	11.4	11.6
112	130	Sadi Cement	132	24.6	24.6	24.6	24.6	24.6	24.6	24.6	24.6	24.6	24.6	24.6
113	59	Sakhi Chashma	132	34.3	35.9	37.4	38.6	39.9	41.3	42.6	44	45.3	46.7	48.1
114	16	Sarai Naurang	132	39.5	40.5	41.5	42.5	43.5	44.5	45.6	46.6	47.7	48.8	49.9
115	83	Shabqadar	132	82.4	86.4	75.8	79.4	83.1	86.8	90.5	94.3	98.1	101.9	105.8

Table 1-41: Maximum Demand (MW) of Substations (Base Forecast) (Contd....)

Sr.No.	Grid No.	Name of Grid Station	KV	Year										
				2016-17	2017-18	2018-19	2019-20	2020-21	2021-22	2022-23	2023-24	2024-25	2025-26	2026-27
116	74	Shahi Bagh	132	76.7	80.7	77.3	81	84.7	88.6	92.5	96.4	100.4	104.5	108.7
117	4480	Shakar Dara	132	0	0	8.3	8.5	8.6	8.8	9	9.1	9.3	9.5	9.6
118	117	Shangla	132	10	10.2	10.5	10.7	11	11.2	11.5	11.8	12	12.3	12.6
119	4490	Shinkyari	132	0	0	10.4	10.6	10.8	11	11.2	11.4	11.6	11.9	12.1
120	4462	Siraj Baba	132	0	0	10.3	10.5	10.6	10.8	10.9	11.1	11.2	11.4	11.6
121	61	Swabi	132	82.3	86	60.6	63.8	67	70.2	73.4	76.7	80	83.3	86.7
122	92	Swat	132	79.1	83.2	74.5	77.9	81.4	84.9	88.4	92	95.6	99.3	103
123	17	Tajazai	132	35.4	36.9	18.2	19.5	20.7	22	23.2	24.5	25.8	27.1	28.4
124	49	Tall	132	30.9	32.6	33.9	35	36	37	38.1	39.2	40.3	41.4	42.5
125	84	Tangi	132	62.3	64.9	67.3	69.6	71.8	74.1	76.4	78.7	81	83.4	85.8
126	22	Tank	132	41.9	43.8	45.7	47.6	49.5	51.5	53.4	55.4	57.4	59.4	61.5
127	134	Tarnawa	132	5.1	5.2	5.3	5.4	5.5	5.5	5.6	5.7	5.8	5.9	6
128	4444	Taru Jabba	132	0	0	31.2	31.8	32.4	32.9	33.5	34.1	34.8	35.4	36.1
129	4458	Thakot	132	0	0	8.9	9	9.2	9.3	9.5	9.6	9.8	9.9	10.1
130	133	Timergara	132	42.7	44.3	45.9	47.4	49	50.6	52.3	53.9	55.6	57.3	59
131	155	Wah	132	2.9	3	3.2	3.3	3.5	3.6	3.7	3.9	4	4.2	4.3
132	4455	Wari	132	0	0	0	10.6	10.8	10.9	11.1	11.2	11.4	11.5	11.7
133	86	Warsak	132	38.3	39.8	32.9	34.2	35.5	36.8	38.1	39.4	40.8	42.1	43.5
134	4465	Warsak Road	132	0	0	16.6	17	17.3	17.6	18	18.3	18.7	19	19.4
135	73	Badaber	66	13.5	14.2	0	0	0	0	0	0	0	0	0
136	137	Bandkuri	66	18.8	19.7	20.5	0	0	0	0	0	0	0	0
137	138	Daraban	66	9.7	10	0	0	0	0	0	0	0	0	0
138	91	Dir	66	10.9	11.3	11.7	0	0	0	0	0	0	0	0

Table 1-41: Maximum Demand (MW) of Substations (Base Forecast) (Contd....)

Sr.No.	Grid No.	Name of Grid Station	KV	Year										
				2016-17	2017-18	2018-19	2019-20	2020-21	2021-22	2022-23	2023-24	2024-25	2025-26	2026-27
139	4	Haripur	66	14.6	15.4	0	0	0	0	0	0	0	0	0
140	6	Havelian	66	18.4	19.4	0	0	0	0	0	0	0	0	0
141	81	Kheshki	66	3.6	3.7	3.8	3.9	4.1	4.2	4.3	4.4	4.5	4.7	4.8
142	47	Kohat	66	1.7	1.7	1.8	1.9	2	2.1	2.1	2.2	2.3	2.4	2.5
143	23	Kulachi	66	9.7	9.9	0	0	0	0	0	0	0	0	0
144	20	Kuram Garhi	66	13.4	14.1	14.7	15.3	16	16.6	17.3	17.9	18.6	19.2	19.9
145	34	Timergara	66	10.4	10.9	8.7	9.1	9.6	10	10.5	11	11.4	11.9	12.4
146	36	Wari	66	10.2	10.3	10.5	0	0	0	0	0	0	0	0
147	171	Darosh	33	1.4	1.4	1.4	0	0	0	0	0	0	0	0
148	176	Jutilasht	33	2.8	2.8	2.9	0	0	0	0	0	0	0	0
149	12	Pattan	33	1.7	1.8	0	0	0	0	0	0	0	0	0
150	136	Thakot	33	8.6	8.8	0	0	0	0	0	0	0	0	0
151	33	Chitral H/P	11	1.3	1.4	1.4	1.4	1.5	1.5	1.6	1.6	1.7	1.7	1.7
152	166	Garam Chashma P	11	0	0	0	0	0	0	0	0	0	0	0
153	265	Kurram Garhi P/	11	1.3	1.3	0	0	0	0	0	0	0	0	0
154	90	Tarbela P/H	11	3.4	3.6	3.7	3.8	4	4.1	4.3	4.4	4.5	4.7	4.9
155	0	TOTAL DISCO:	0	3549.5	3713.9	3867.3	4010.7	4155.5	4303	4452.1	4603.6	4756.6	4912.2	5071

Table 1-42: Family of Grids (Existing, Proposed & Transit Grid)

Sr. No.	Group No.	Grid No.	Name of Grid Station	KV	Year										
					2016-17	2017-18	2018-19	2019-20	2020-21	2021-22	2022-23	2023-24	2024-25	2025-26	2026-27
1	2	2	Mansehra	132	48.3	50.9	53.5	56.1	58.7	61.3	64	66.7	69.4	72.2	75
2	2	5607	Mansehra-Shinky	132	10	10.2	10.4	10.6	10.8	11	11.2	11.4	11.6	11.9	12.1
3	2	5609	Mansehra-Kala D	132	5	5.1	5.2	5.3	5.4	5.5	5.6	5.7	5.8	5.9	6
4	2	4492	Kala Dhaka	132	0	0	0	0	0	0	0	0	0	0	0
5	2	4490	Shinkyari	132	0	0	0	0	0	0	0	0	0	0	0
6	3	3	Haripur	132	40	42.7	45.2	47.4	49.8	52.1	54.5	56.9	59.4	61.9	64.4
7	3	5603	Haripur-Khanpur	132	12	12.4	12.7	12.9	13.2	13.4	13.7	13.9	14.2	14.5	14.7
8	3	5608	Haripur-Lora	132	8	8.2	8.4	8.6	8.7	8.9	9.1	9.2	9.4	9.6	9.8
9	3	4486	Khanpur	132	0	0	0	0	0	0	0	0	0	0	0
10	3	4491	Lora	132	0	0	0	0	0	0	0	0	0	0	0
11	4	5564	Haripur-Haripur	132	14.6	15.4	16.1	16.8	17.5	18.2	18.9	19.6	20.3	21	21.7
12	4	4	Haripur	66	0	0	0	0	0	0	0	0	0	0	0
13	4	4450	Haripur132	132	0	0	0	0	0	0	0	0	0	0	0
14	6	5573	Havelian-Haveli	132	18.4	19.4	20.4	21.3	22.2	23.1	24	25	25.9	26.9	27.9
15	6	6	Havelian	66	0	0	0	0	0	0	0	0	0	0	0
16	6	4459	Havelian	132	0	0	0	0	0	0	0	0	0	0	0
17	7	7	R.B Tarbela	132	39	41.2	43.1	44.8	46.6	48.3	50.1	51.9	53.7	55.5	57.4
18	8	8	Nishat Tarbela	132	12.9	13.5	14	14.5	14.9	15.4	16	16.5	17	17.5	18.1
19	12	5563	Pattan-Pattan	132	1.7	1.8	1.8	1.9	1.9	1.9	2	2	2.1	2.1	2.2
20	12	12	Pattan	33	0	0	0	0	0	0	0	0	0	0	0
21	12	4449	Pattan	132	0	0	0	0	0	0	0	0	0	0	0

Table 1-42: Family of Grids (Existing, Proposed & Transit Grid) (Contd....)

Sr. No.	Group No.	Grid No.	Name of Grid Station	KV	Year										
					2016-17	2017-18	2018-19	2019-20	2020-21	2021-22	2022-23	2023-24	2024-25	2025-26	2026-27
22	13	13	Battal	132	21	22	23	24	24.9	25.9	26.9	27.9	28.9	30	31
23	14	5590	Balakot-Garhi H	132	8	8.2	8.3	8.4	8.6	8.7	8.8	9	9.1	9.2	9.4
24	14	14	Balakot	132	4.8	5.1	5.5	5.8	6.1	6.5	6.8	7.1	7.5	7.8	8.2
25	14	4474	Garhi Habibulla	132	0	0	0	0	0	0	0	0	0	0	0
26	15	15	Bannu	132	85.4	89.6	93.7	97.7	101.8	105.9	110.1	114.3	118.6	122.9	127.3
27	15	5583	Bannu-Bannu-II	132	10	10.2	10.4	10.6	10.8	11	11.1	11.3	11.5	11.8	12
28	15	4468	Bannu-II	132	0	0	0	0	0	0	0	0	0	0	0
29	16	16	Sarai Naurang	132	39.5	40.5	41.5	42.5	43.5	44.5	45.6	46.6	47.7	48.8	49.9
30	17	5610	Tajazai-Lakki	132	19.6	19.9	20.2	20.5	20.8	21.1	21.5	21.8	22.1	22.4	22.7
31	17	17	Tajazai	132	15.8	17	18.2	19.5	20.7	22	23.2	24.5	25.8	27.1	28.4
32	18	18	Pezu	132	15.5	16.1	16.7	17.3	17.9	18.5	19.1	19.7	20.3	20.9	21.5
33	20	20	Kuram Garhi	66	13.4	14.1	14.7	15.3	16	16.6	17.3	17.9	18.6	19.2	19.9
34	22	22	Tank	132	41.9	43.8	45.7	47.6	49.5	51.5	53.4	55.4	57.4	59.4	61.5
35	23	5560	Kulachi-Kulachi	132	9.7	9.9	10.2	10.4	10.6	10.9	11.1	11.4	11.7	11.9	12.2
36	23	23	Kulachi	66	0	0	0	0	0	0	0	0	0	0	0
37	23	4446	Kulachi	132	0	0	0	0	0	0	0	0	0	0	0
38	24	24	Locomotive	132	0.8	0.8	0.8	0.8	0.8	0.8	0.8	0.8	0.8	0.8	0.8
39	25	25	Gadoon Amazai	132	34	36.5	38.5	40	41.5	43.1	44.6	46.2	47.8	49.4	51.1

Table 1-6: Consumer Category Wise Demand – MW (Base Forecast)

Actual with load shedding :-

Year	Domestic		Commercial		Public Light		Small Industries		M&L Industries		Tube Well		Total (Diversified)	
	Demand	G.R (%)	Demand	G.R (%)	Demand	G.R (%)	Demand	G.R (%)	Demand	G.R (%)	Demand	G.R (%)	Demand	G.R (%)
2016-17	1656		225		4		38		413		18		2160	
2017-18	1872	13.1	261	15.8	5	11.6	43	13.6	483	16.8	21	12.2	2462	14.0
2018-19	1958	4.6	280	7.1	5	3.2	45	5.1	511	5.9	21	3.9	2589	5.1
2019-20	2047	4.5	300	7.1	5	3.2	48	5.1	531	3.9	22	3.8	2711	4.7
2020-21	2137	4.4	320	6.9	5	3.1	50	5.0	551	3.8	23	3.7	2836	4.6
2021-22	2228	4.3	342	6.8	5	3.1	52	4.9	572	3.7	24	3.7	2963	4.5
2022-23	2321	4.2	365	6.7	5	3.0	55	4.8	593	3.7	25	3.6	3093	4.4
2023-24	2417	4.1	389	6.6	6	3.0	57	4.8	615	3.7	26	3.6	3228	4.4
2024-25	2517	4.2	415	6.6	6	3.0	60	4.8	638	3.8	27	3.6	3370	4.4
2025-26	2622	4.2	443	6.7	6	3.1	63	4.8	662	3.8	28	3.7	3519	4.4
2026-27	2725	3.9	471	6.4	6	2.9	66	4.6	686	3.6	28	3.5	3667	4.2
Ave. Growth (2017-2027)	5.1%		7.6%		3.9%		5.7%		5.2%		4.5%		5.4%	

Table 1-7: Division-wise Sale (GWh), Generation (GWh) and Demand (MW) Forecast (Division: Peshawar)

Year	Energy Sale		Distribution Losses		Transmission Losses		Generation	Load Factor	Peak Demand
	(GWh)	G.R (%)	(GWh)	%	(GWh)	%	(GWh)	%	(MW)
2016-17	4807		2125	30.65	220	3.08	7152	38.3	2131
2017-18	5044	4.93	2187	30.25	226	3.04	7457	38.5	2212
2018-19	5258	4.25	2236	29.83	231	2.99	7724	38.6	2287
2019-20	5458	3.80	2273	29.40	234	2.94	7965	38.6	2355
2020-21	5663	3.77	2309	28.96	238	2.89	8210	38.7	2424
2021-22	5875	3.74	2344	28.52	241	2.85	8459	38.7	2494
2022-23	6093	3.71	2376	28.06	244	2.80	8713	38.8	2565
2023-24	6317	3.68	2407	27.59	247	2.75	8971	38.8	2637
2024-25	6547	3.65	2436	27.12	250	2.70	9233	38.9	2711
2025-26	6785	3.63	2463	26.64	252	2.66	9501	38.9	2785
2026-27	7029	3.60	2488	26.14	255	2.61	9773	39.0	2861
Ave. Growth (2017-2027)	3.87 %						3.17 %		2.99 %

Table 1-8: Division-wise Sale (GWh), Generation (GWh) and Demand (MW) Forecast (Division: Mardan)

Year	Energy Sale		Distribution Losses		Transmission Losses		Generation	Load Factor	Peak Demand
	(GWh)	G.R (%)	(GWh)	%	(GWh)	%	(GWh)	%	(MW)
2016-17	1915		898	31.92	89	3.08	2902	50.2	660
2017-18	2015	5.22	925	31.46	92	3.04	3031	50.6	684
2018-19	2103	4.37	944	30.98	94	2.99	3140	50.7	707
2019-20	2182	3.78	958	30.50	95	2.94	3235	50.7	728
2020-21	2264	3.74	971	30.02	96	2.89	3331	50.7	750
2021-22	2348	3.70	983	29.52	98	2.85	3429	50.7	771
2022-23	2434	3.66	995	29.02	99	2.80	3528	50.8	793
2023-24	2522	3.63	1006	28.52	100	2.75	3628	50.8	816
2024-25	2613	3.59	1016	28.00	101	2.70	3729	50.8	838
2025-26	2706	3.56	1025	27.48	102	2.66	3833	50.8	861
2026-27	2801	3.53	1033	26.95	103	2.61	3937	50.8	884
Ave. Growth (2017-2027)	3.88 %						3.10 %		2.97 %

Table 1-9: Division-wise Sale (GWh), Generation (GWh) and Demand (MW) Forecast (Division: Kohat)

Year	Energy Sale		Distribution Losses		Transmission Losses		Generation	Load Factor	Peak Demand
	(GWh)	G.R (%)	(GWh)	%	(GWh)	%	(GWh)	%	(MW)
2016-17	1209		464	27.73	53	3.08	1726	35.0	562
2017-18	1250	3.40	473	27.44	54	3.04	1777	35.0	579
2018-19	1291	3.24	481	27.14	55	2.99	1826	35.0	596
2019-20	1331	3.13	488	26.82	55	2.94	1874	35.0	611
2020-21	1373	3.12	494	26.48	56	2.89	1923	35.0	627
2021-22	1415	3.10	501	26.14	56	2.85	1972	35.0	643
2022-23	1459	3.09	507	25.78	57	2.80	2022	35.0	659
2023-24	1504	3.08	512	25.41	57	2.75	2073	35.1	675
2024-25	1550	3.07	517	25.02	57	2.70	2125	35.1	692
2025-26	1598	3.06	522	24.63	58	3	2178	35.1	709
2026-27	1646	3.05	526	24.22	58	2.61	2231	35.1	726
Ave. Growth (2017-2027)	3.13 %						2.60 %		2.58 %

Table 1-10: Division-wise Sale (GWh), Generation (GWh) and Demand (MW) Forecast (Division: Bannu)

Year	Energy Sale		Distribution Losses		Transmission Losses		Generation	Load Factor	Peak Demand
	(GWh)	G.R (%)	(GWh)	%	(GWh)	%	(GWh)	%	(MW)
2016-17	427		200	31.92	20	3	647	20.8	355
2017-18	444	4.00	204	31.46	20	3	668	20.9	365
2018-19	461	3.72	207	30.98	21	3	688	20.9	376
2019-20	477	3.52	209	30.50	21	3	707	20.9	386
2020-21	494	3.49	212	30.02	21	3	726	20.9	396
2021-22	511	3.45	214	29.52	21	3	746	20.9	407
2022-23	528	3.42	216	29.02	21	3	766	21.0	417
2023-24	546	3.39	218	28.52	22	3	785	21.0	428
2024-25	564	3.36	219	28.00	22	3	806	21.0	438
2025-26	583	3.34	221	27.48	22	3	826	21.0	449
2026-27	603	3.31	222	26.95	22	3	847	21.0	460
Ave. Growth (2017-2027)	3.50 %						2.72 %		2.63 %

Table 1-11: Division-wise Sale (GWh), Generation (GWh) and Demand (MW) Forecast (Division: D.I.Khan)

Year	Energy Sale		Distribution Losses		Transmission Losses		Generation	Load Factor	Peak Demand
	(GWh)	G.R (%)	(GWh)	%	(GWh)	%	(GWh)	%	(MW)
2016-17	714		335	31.92	33	3	1082	33.4	370
2017-18	745	4.33	342	31.46	34	3	1121	33.5	383
2018-19	775	3.99	348	30.98	35	3	1157	33.5	395
2019-20	804	3.73	353	30.50	35	3	1192	33.5	406
2020-21	834	3.69	357	30.02	35	3	1226	33.5	418
2021-22	864	3.65	362	29.52	36	3	3068	33.5	430
2022-23	895	3.60	366	29.02	36	3	1297	33.5	442
2023-24	927	3.57	370	28.52	37	3	1333	33.5	455
2024-25	960	3.53	373	28.00	37	3	1370	33.5	467
2025-26	993	3.49	376	27.48	37	3	1407	33.5	480
2026-27	1028	3.46	379	26.95	38	3	1444	33.5	493
Ave. Growth (2017-2027)	3.70 %						2.93 %		2.90 %

Table 1-12: Division-wise Sale (GWh), Generation (GWh) and Demand (MW) Forecast (Division: Malakand)

Year	Energy Sale		Distribution Losses		Transmission Losses		Generation	Load Factor	Peak Demand
	(GWh)	G.R (%)	(GWh)	%	(GWh)	%	(GWh)	%	(MW)
2016-17	1776		833	31.92	83	3	2692	49.1	626
2017-18	1863	4.89	855	31.46	85	3	2803	49.2	650
2018-19	1941	4.18	871	30.98	87	3	2899	49.3	672
2019-20	2012	3.67	883	30.50	88	3	2983	49.3	690
2020-21	2085	3.63	894	30.02	89	3	3068	49.4	709
2021-22	2160	3.59	905	29.52	90	3	3155	49.4	728
2022-23	2237	3.56	915	29.02	91	3	3242	49.5	748
2023-24	2316	3.52	924	28.52	92	3	3331	49.5	767
2024-25	2396	3.49	932	28.00	93	3	3421	49.6	787
2025-26	2479	3.46	939	27.48	93	3	3512	49.6	808
2026-27	2565	3.43	946	26.95	94	3	3605	49.7	828
Ave. Growth (2017-2027)	3.74 %						2.96 %		2.83 %

Table 1-13: Division-wise Sale (GWh), Generation (GWh) and Demand (MW) Forecast (Division: Hazara)

Year	Energy Sale		Distribution Losses		Transmission Losses		Generation	Load Factor	Peak Demand
	(GWh)	G.R (%)	(GWh)	%	(GWh)	%	(GWh)	%	(MW)
2016-17	2940		1185	28.72	131	3	4256	57.6	843
2017-18	3126	6.32	1244	28.47	137	3	4507	58.5	879
2018-19	3273	4.70	1283	28.16	140	3	4697	58.8	911
2019-20	3397	3.79	1309	27.81	143	3	4849	59.0	938
2020-21	3525	3.76	1334	27.45	145	3	5003	59.1	966
2021-22	3656	3.73	1358	27.08	147	3	5161	59.3	994
2022-23	3792	3.70	1380	26.69	149	3	5321	59.4	1022
2023-24	3931	3.67	1402	26.29	151	3	5484	59.6	1051
2024-25	4074	3.64	1422	25.88	153	3	5649	59.7	1081
2025-26	4221	3.62	1442	25.46	155	3	5818	59.8	1110
2026-27	4373	3.60	1460	25.02	156	3	5989	59.9	1141
Ave. Growth (2017-2027)	4.05 %						3.48 %		3.07 %

Table 1-14: District-wise Sale (GWh), Generation (GWh) and Demand (MW) Forecast (District: Peshawar)

Year	Energy Sale		Distribution Losses		Transmission Losses		Generation	Load Factor	Peak Demand
	(GWh)	G.R (%)	(GWh)	%	(GWh)	%	(GWh)	%	(MW)
2016-17	3118		1462	31.92	146	3.08	4725	38.9	1387
2017-18	3283	5.29	1507	31.46	150	3.04	4939	39.1	1442
2018-19	3432	4.54	1541	30.98	153	2.99	5126	39.2	1492
2019-20	3570	4.02	1567	30.50	156	2.94	5293	39.3	1538
2020-21	3712	3.98	1592	30.02	158	2.89	5463	39.4	1584
2021-22	3859	3.95	1616	29.52	160	2.85	5636	39.4	1631
2022-23	4010	3.91	1640	29.02	163	2.80	5812	39.5	1679
2023-24	4165	3.88	1662	28.52	165	2.75	5992	39.6	1728
2024-25	4326	3.85	1682	28.00	167	2.70	6175	39.7	1777
2025-26	4491	3.82	1702	27.48	169	2.66	6362	39.7	1828
2026-27	4661	3.79	1720	26.95	171	2.61	6552	39.8	1879
Ave. Growth (2017-2027)	4.10%						3.32%		3.08%

Table 1-15: District-wise Sale (GWh), Generation (GWh) and Demand (MW) Forecast (District: Charsada)

Year	Energy Sale		Distribution Losses		Transmission Losses		Generation	Load Factor	Peak Demand
	(GWh)	G.R (%)	(GWh)	%	(GWh)	%	(GWh)	%	(MW)
2016-17	475		223	31.92	22	3.08	720	21.9	375
2017-18	496	4.43	228	31.46	23	3.04	746	22.0	388
2018-19	516	4.07	232	30.98	23	2.99	771	22.0	400
2019-20	536	3.80	235	30.50	23	2.94	794	22.0	412
2020-21	556	3.75	238	30.02	24	2.89	818	22.0	424
2021-22	576	3.71	241	29.52	24	2.85	842	22.0	437
2022-23	597	3.66	244	29.02	24	2.80	866	22.0	449
2023-24	619	3.62	247	28.52	25	2.75	891	22.0	462
2024-25	641	3.59	249	28.00	25	2.70	915	22.0	474
2025-26	664	3.55	252	27.48	25	2.66	941	22.0	487
2026-27	687	3.52	254	26.95	25	2.61	966	22.1	500
Ave. Growth (2017-2027)	3.77%						2.99%		2.93%

Table 1-16: District-wise Sale (GWh), Generation (GWh) and Demand (MW) Forecast (District: Nowsehra)

Year	Energy Sale		Distribution Losses		Transmission Losses		Generation	Load Factor	Peak Demand
	(GWh)	G R (%)	(GWh)	%	(GWh)	%	(GWh)	%	(MW)
2016-17	1214		440	26.60	53	3.08	1707	44.3	440
2017-18	1265	4.18	453	26.38	54	3.04	1772	44.5	455
2018-19	1310	3.56	463	26.13	55	2.99	1828	44.5	469
2019-20	1352	3.22	471	25.84	55	2.94	1878	44.5	482
2020-21	1395	3.20	479	25.54	56	2.89	1930	44.6	494
2021-22	1440	3.18	486	25.23	56	2.85	1982	44.6	507
2022-23	1485	3.17	492	24.90	57	2.80	2035	44.6	521
2023-24	1532	3.15	499	24.56	57	2.75	2089	44.6	534
2024-25	1580	3.14	505	24.21	58	2.70	2143	44.7	548
2025-26	1630	3.13	510	23.84	58	2.66	2198	44.7	562
2026-27	1681	3.11	515	23.46	59	2.61	2255	44.7	576
Ave. Growth (2017-2027)	3.30%						2.82%		2.73%

Table 1-17: District-wise Sale (GWh), Generation (GWh) and Demand (MW) Forecast (District: Mardan)

Year	Energy Sale		Distribution Losses		Transmission Losses		Generation	Load Factor	Peak Demand
	(GWh)	G.R (%)	(GWh)	%	(GWh)	%	(GWh)	%	(MW)
2016-17	1106		519	31.92	52	3.08	1676	47.8	401
2017-18	1156	4.51	530	31.46	53	3.04	1739	47.9	414
2018-19	1202	4.04	540	30.98	54	2.99	1796	48.0	427
2019-20	1247	3.72	547	30.50	54	2.94	1849	48.0	440
2020-21	1293	3.68	555	30.02	55	2.89	1903	48.0	452
2021-22	1340	3.64	561	29.52	56	2.85	1957	48.0	465
2022-23	1388	3.61	568	29.02	56	2.80	2012	48.0	479
2023-24	1438	3.57	574	28.52	57	2.75	2068	48.0	492
2024-25	1489	3.54	579	28.00	57	2.70	2125	48.0	505
2025-26	1541	3.51	584	27.48	58	2.66	2183	48.0	519
2026-27	1595	3.48	588	26.95	59	2.61	2242	48.0	533
Ave. Growth (2017-2027)	3.73%						2.95%		2.90%

Table 1-18: District-wise Sale (GWh), Generation (GWh) and Demand (MW) Forecast (District: Sawabi)

Year	Energy Sale		Distribution Losses		Transmission Losses		Generation	Load Factor	Peak Demand
	(GWh)	G.R (%)	(GWh)	%	(GWh)	%	(GWh)	%	(MW)
2016-17	809		379	31.92	38	3.08	1226	49.8	281
2017-18	859	6.19	394	31.46	39	3.04	1292	50.4	293
2018-19	900	4.81	404	30.98	40	2.99	1345	50.6	303
2019-20	935	3.87	410	30.50	41	2.94	1386	50.6	313
2020-21	971	3.82	416	30.02	41	2.89	1429	50.7	322
2021-22	1008	3.78	422	29.52	42	2.85	1472	50.7	331
2022-23	1045	3.74	427	29.02	42	2.80	1515	50.8	341
2023-24	1084	3.70	432	28.52	43	2.75	1559	50.8	350
2024-25	1124	3.66	437	28.00	43	2.70	1604	50.9	360
2025-26	1164	3.63	441	27.48	44	2.66	1650	50.9	370
2026-27	1206	3.59	445	26.95	44	2.61	1696	51.0	380
Ave. Growth (2017-2027)	4.08%						3.30%		3.06%

Table 1-19: District-wise Sale (GWh), Generation (GWh) and Demand (MW) Forecast (District: Kohat)

Year	Energy Sale		Distribution Losses		Transmission Losses		Generation	Load Factor	Peak Demand
	(GWh)	G.R (%)	(GWh)	%	(GWh)	%	(GWh)	%	(MW)
2016-17	876		308	25.99	38	3.08	1221	42.9	325
2017-18	905	3.28	314	25.78	38	3.04	1257	42.9	334
2018-19	933	3.11	320	25.55	39	2.99	1292	43.0	343
2019-20	961	2.99	325	25.29	39	2.94	1325	43.0	352
2020-21	990	2.98	330	25.02	39	2.89	1359	43.0	361
2021-22	1019	2.98	335	24.73	40	2.85	1394	43.0	370
2022-23	1049	2.98	339	24.43	40	2.80	1429	43.0	379
2023-24	1081	2.97	343	24.11	43	2.75	1464	43.0	389
2024-25	1113	2.97	347	23.78	41	2.70	1501	43.0	398
2025-26	1146	2.97	351	23.44	41	2.66	1537	43.0	408
2026-27	1180	2.97	354	23.09	41	2.61	1575	43.1	418
Ave. Growth (2017-2027)	3.02%						2.57%		2.54%

Table 1-20: District-wise Sale (GWh), Generation (GWh) and Demand (MW) Forecast (District: Hangu)

Year	Energy Sale		Distribution Losses		Transmission Losses		Generation	Load Factor	Peak Demand
	(GWh)	G.R (%)	(GWh)	%	(GWh)	%	(GWh)	%	(MW)
2016-17	197		92	31.92	9	3.08	298	22.3	153
2017-18	205	3.91	94	31.46	9	3.04	308	22.1	159
2018-19	212	3.74	95	30.98	9	2.99	317	22.1	164
2019-20	220	3.61	96	30.50	10	2.94	326	22.1	168
2020-21	228	3.57	98	30.02	10	2.89	335	22.1	173
2021-22	236	3.53	99	29.52	10	2.85	344	22.1	177
2022-23	244	3.49	100	29.02	10	2.80	354	22.2	182
2023-24	252	3.46	101	28.52	10	2.75	363	22.2	187
2024-25	261	3.43	102	28.00	10	2.70	373	22.2	192
2025-26	270	3.39	102	27.48	10	2.66	382	22.2	197
2026-27	279	3.36	103	26.95	10	2.61	392	22.2	201
Ave. Growth (2017-2027)	3.55%						2.77%		2.79%

Table 1-21: District-wise Sale (GWh), Generation (GWh) and Demand (MW) Forecast (District: Karak)

Year	Energy Sale		Distribution Losses		Transmission Losses		Generation	Load Factor	Peak Demand
	(GWh)	G.R (%)	(GWh)	%	(GWh)	%	(GWh)	%	(MW)
2016-17	136		64	31.92	6	3.08	206	23.0	103
2017-18	141	3.47	65	31.46	6	3.04	212	22.9	106
2018-19	146	3.38	65	30.98	7	2.99	218	23.0	108
2019-20	151	3.31	66	30.50	7	2.94	223	23.0	111
2020-21	156	3.28	67	30.02	7	2.89	229	23.0	114
2021-22	161	3.25	67	29.52	7	2.85	234	23.0	116
2022-23	166	3.23	68	29.02	7	2.80	240	23.1	119
2023-24	171	3.20	68	28.52	7	2.75	246	23.1	122
2024-25	176	3.18	69	28.00	7	2.70	252	23.1	124
2025-26	182	3.15	69	27.48	7	2.66	258	23.1	127
2026-27	188	3.13	69	26.95	7	2.61	264	23.2	130
Ave. Growth (2017-2027)	3.26%						2.48%		2.39%

Table 1-22: District-wise Sale (GWh), Generation (GWh) and Demand (MW) Forecast (District: Bannu)

Year	Energy Sale		Distribution Losses		Transmission Losses		Generation	Load Factor	Peak Demand
	(GWh)	G.R (%)	(GWh)	%	(GWh)	%	(GWh)	%	(MW)
2016-17	262		123	31.92	12	3.08	397	18.4	247
2017-18	273	4.14	125	31.46	12	3.04	411	18.4	254
2018-19	284	3.82	127	30.98	13	2.99	423	18.5	262
2019-20	294	3.59	129	30.50	13	2.94	435	18.5	269
2020-21	304	3.55	130	30.02	13	2.89	448	18.5	277
2021-22	315	3.52	132	29.52	13	2.85	460	18.5	284
2022-23	326	3.49	133	29.02	13	2.80	472	18.5	292
2023-24	337	3.45	134	28.52	13	2.75	485	18.5	299
2024-25	349	3.43	136	28.00	13	2.70	498	18.5	307
2025-26	360	3.40	137	27.48	14	2.66	511	18.5	315
2026-27	373	3.37	137	26.95	14	2.61	524	18.5	323
Ave. Growth (2017-2027)	3.58%						2.80%		2.74%

Table 1-23: District-wise Sale (GWh), Generation (GWh) and Demand (MW) Forecast (District: Lakki)

Year	Energy Sale		Distribution Losses		Transmission Losses		Generation	Load Factor	Peak Demand
	(GWh)	G.R (%)	(GWh)	%	(GWh)	%	(GWh)	%	(MW)
2016-17	165		77	31.92	8	3.08	250	23.8	120
2017-18	171	3.77	79	31.46	8	3.04	257	23.9	123
2018-19	177	3.56	80	30.98	8	2.99	265	23.9	126
2019-20	183	3.41	80	30.50	8	2.94	272	24.0	129
2020-21	189	3.38	81	30.02	8	2.89	279	24.0	133
2021-22	196	3.35	82	29.52	8	2.85	286	24.0	136
2022-23	202	3.32	83	29.02	8	2.80	293	24.1	139
2023-24	209	3.29	83	28.52	8	2.75	301	24.1	142
2024-25	216	3.27	84	28.00	8	2.70	308	24.1	146
2025-26	223	3.24	84	27.48	8	2.66	316	24.2	149
2026-27	230	3.22	85	26.95	8	2.61	323	24.2	152
Ave. Growth (2017-2027)	3.38%						2.60%		2.42%

Table 1-24: District-wise Sale (GWh), Generation (GWh) and Demand (MW) Forecast (District: D.I Khan)

Year	Energy Sale		Distribution Losses		Transmission Losses		Generation	Load Factor	Peak Demand
	(GWh)	G.R (%)	(GWh)	%	(GWh)	%	(GWh)	%	(MW)
2016-17	643		302	31.92	30	3.08	975	35.2	316
2017-18	671	4.37	308	31.46	31	3.04	1010	35.3	326
2018-19	698	4.00	313	30.98	31	2.99	1043	35.3	337
2019-20	724	3.72	318	30.50	32	2.94	1074	35.4	347
2020-21	751	3.68	322	30.02	32	2.89	1105	35.4	357
2021-22	778	3.64	326	29.52	32	2.85	1136	35.4	367
2022-23	806	3.59	330	29.02	33	2.80	1168	35.4	377
2023-24	835	3.56	333	28.52	33	2.75	1201	35.4	388
2024-25	864	3.52	336	28.00	33	2.70	1234	35.4	398
2025-26	894	3.49	339	27.48	34	2.66	1267	35.4	409
2026-27	925	3.45	341	26.95	34	2.61	1300	35.4	420
Ave. Growth (2017-2027)	3.70%						2.92%		2.88%

Table 1-25: District-wise Sale (GWh), Generation (GWh) and Demand (MW) Forecast (District: Tank)

Year	Energy Sale		Distribution Losses		Transmission Losses		Generation	Load Factor	Peak Demand
	(GWh)	G.R (%)	(GWh)	%	(GWh)	%	(GWh)	%	(MW)
2016-17	71		33	31.92	3	3.08	108	18.5	66
2017-18	74	4.00	34	31.46	3	3.04	111	18.5	69
2018-19	77	3.91	34	30.98	3	2.99	115	18.5	71
2019-20	80	3.84	35	30.50	3	2.94	118	18.5	73
2020-21	83	3.79	35	30.02	4	2.89	122	18.5	75
2021-22	86	3.74	36	29.52	4	2.85	125	18.5	77
2022-23	89	3.70	36	29.02	4	2.80	129	18.4	80
2023-24	92	3.66	37	28.52	4	2.75	133	18.4	82
2024-25	96	3.62	37	28.00	4	2.70	136	18.4	84
2025-26	99	3.58	37	27.48	4	2.66	140	18.4	87
2026-27	102	3.54	38	26.95	4	2.61	144	18.4	89
Ave. Growth (2017-2027)	3.74%						2.96%		3.01%

Table 1-26: District-wise Sale (GWh), Generation (GWh) and Demand (MW) Forecast (District: Swat)

Year	Energy Sale		Distribution Losses		Transmission Losses		Generation	Load Factor	Peak Demand
	(GWh)	G.R (%)	(GWh)	%	(GWh)	%	(GWh)	%	(MW)
2016-17	613		287	31.92	29	3.08	929	51.9	204
2017-18	640	4.50	294	31.46	29	3.04	963	51.9	212
2018-19	666	4.08	299	30.98	30	2.99	995	52.0	219
2019-20	692	3.78	304	30.50	30	2.94	1025	52.0	225
2020-21	718	3.74	308	30.02	31	2.89	1056	52.0	232
2021-22	744	3.70	312	29.52	31	2.85	1087	52.0	238
2022-23	771	3.66	315	29.02	31	2.80	1118	52.1	245
2023-24	799	3.62	319	28.52	32	2.75	1150	52.1	252
2024-25	828	3.59	322	28.00	32	2.70	1182	52.1	259
2025-26	857	3.56	325	27.48	32	2.66	1215	52.2	266
2026-27	888	3.53	327	26.95	33	2.61	1248	52.2	273
Ave. Growth (2017-2027)	3.77%						3.00%		2.92%

Table 1-27: District-wise Sale (GWh), Generation (GWh) and Demand (MW) Forecast (District: Upper Dir)

Year	Energy Sale		Distribution Losses		Transmission Losses		Generation	Load Factor	Peak Demand
	(GWh)	G.R (%)	(GWh)	%	(GWh)	%	(GWh)	%	(MW)
2016-17	87		41	31.92	4	3.08	132	44.4	34
2017-18	89	2.86	41	31.46	4	3.04	134	44.4	35
2018-19	92	2.81	41	30.98	4	2.99	137	44.4	35
2019-20	94	2.76	41	30.50	4	2.94	140	44.4	36
2020-21	97	2.75	42	30.02	4	2.89	143	44.4	37
2021-22	100	2.74	42	29.52	4	2.85	145	44.4	37
2022-23	102	2.73	42	29.02	4	2.80	148	44.4	38
2023-24	105	2.72	42	28.52	4	2.75	151	44.4	39
2024-25	108	2.71	42	28.00	4	2.70	154	44.4	40
2025-26	111	2.70	42	27.48	4	2.66	157	44.4	40
2026-27	114	2.69	42	26.95	4	2.61	160	44.4	41
Ave. Growth (2017-2027)	2.75%						1.97%		1.98%

Table 1-28: District-wise Sale (GWh), Generation (GWh) and Demand (MW) Forecast (District: Bunair)

Year	Energy Sale		Distribution Losses		Transmission Losses		Generation	Load Factor	Peak Demand
	(GWh)	G.R (%)	(GWh)	%	(GWh)	%	(GWh)	%	(MW)
2016-17	372		174	31.92	17	3.08	564	67.6	95
2017-18	396	6.38	182	31.46	18	3.04	595	68.0	100
2018-19	415	4.95	186	30.98	19	2.99	620	68.1	104
2019-20	432	4.09	190	30.50	19	2.94	641	68.2	107
2020-21	450	4.03	193	30.02	19	2.89	662	68.3	111
2021-22	468	3.97	196	29.52	19	2.85	683	68.4	114
2022-23	486	3.92	199	29.02	20	2.80	704	68.5	117
2023-24	505	3.87	201	28.52	20	2.75	726	68.6	121
2024-25	524	3.83	204	28.00	20	2.70	748	68.7	124
2025-26	544	3.78	206	27.48	20	2.66	770	68.8	128
2026-27	564	3.74	208	26.95	21	2.61	793	68.8	132
Ave. Growth (2017-2027)	4.25%						3.47%		3.28%

Table 1-29: District-wise Sale (GWh), Generation (GWh) and Demand (MW) Forecast (District: Shangla)

Year	Energy Sale		Distribution Losses		Transmission Losses		Generation	Load Factor	Peak Demand
	(GWh)	G.R (%)	(GWh)	%	(GWh)	%	(GWh)	%	(MW)
2016-17	43		20	31.92	2	3.08	65	35.5	21
2017-18	44	2.77	20	31.46	2	3.04	66	35.5	21
2018-19	45	2.75	20	30.98	2	2.99	68	35.5	22
2019-20	46	2.74	20	30.50	2	2.94	69	35.4	22
2020-21	48	2.73	20	30.02	2	2.89	70	35.4	23
2021-22	49	2.71	21	29.52	2	2.85	72	35.4	23
2022-23	50	2.70	21	29.02	2	2.80	73	35.3	24
2023-24	52	2.69	21	28.52	2	2.75	74	35.3	24
2024-25	53	2.69	21	28.00	2	2.70	76	35.3	25
2025-26	55	2.68	21	27.48	2	2.66	77	35.3	25
2026-27	56	2.67	21	26.95	2	2.61	79	35.2	25
Ave. Growth (2017-2027)	2.71%						1.94%		2.03%

Table 1-30: District-wise Sale (GWh), Generation (GWh) and Demand (MW) Forecast (District: Malakand)

Year	Energy Sale		Distribution Losses		Transmission Losses		Generation	Load Factor	Peak Demand
	(GWh)	G.R (%)	(GWh)	%	(GWh)	%	(GWh)	%	(MW)
2016-17	130		61	31.92	6	3.08	198	27.2	83
2017-18	140	7.25	64	31.46	6	3.04	211	27.4	88
2018-19	147	4.92	66	30.98	7	2.99	219	27.5	91
2019-20	151	2.82	66	30.50	7	2.94	224	27.5	93
2020-21	155	2.82	67	30.02	7	2.89	228	27.6	95
2021-22	160	2.82	67	29.52	7	2.85	233	27.6	96
2022-23	164	2.82	67	29.02	7	2.80	238	27.6	98
2023-24	169	2.83	67	28.52	7	2.75	243	27.6	100
2024-25	174	2.83	67	28.00	7	2.70	248	27.7	102
2025-26	178	2.83	68	27.48	7	2.66	253	27.7	104
2026-27	183	2.83	68	26.95	7	2.61	258	27.7	106
Ave. Growth (2017-2027)	3.47%						2.69%		2.49%

Table 1-31: District-wise Sale (GWh), Generation (GWh) and Demand (MW) Forecast (District: Chitral)

Year	Energy Sale		Distribution Losses		Transmission Losses		Generation	Load Factor	Peak Demand
	(GWh)	G.R (%)	(GWh)	%	(GWh)	%	(GWh)	%	(MW)
2016-17	25		12	31.92	1	3.08	38	48.5	9
2017-18	25	2.42	12	31.46	1	3.04	38	48.5	9
2018-19	26	2.43	12	30.98	1	2.99	39	48.5	9
2019-20	27	2.43	12	30.50	1	2.94	39	48.5	9
2020-21	27	2.44	12	30.02	1	2.89	40	48.4	9
2021-22	28	2.44	12	29.52	1	2.85	41	48.4	10
2022-23	29	2.45	12	29.02	1	2.80	42	48.4	10
2023-24	29	2.45	12	28.52	1	2.75	42	48.4	10
2024-25	30	2.46	12	28.00	1	2.70	43	48.3	10
2025-26	31	2.47	12	27.48	1	2.66	44	48.3	10
2026-27	32	2.47	12	26.95	1	2.61	44	48.3	10
Ave. Growth (2017-2027)	2.45%						1.68%		1.73%

Table 1-32: District-wise Sale (GWh), Generation (GWh) and Demand (MW) Forecast (District: Lower Dir)

Year	Energy Sale		Distribution Losses		Transmission Losses		Generation	Load Factor	Peak Demand
	(GWh)	G.R (%)	(GWh)	%	(GWh)	%	(GWh)	%	(MW)
2016-17	507		238	31.92	24	3.08	768	43.8	200
2017-18	528	4.30	243	31.46	24	3.04	795	43.8	207
2018-19	549	3.97	247	30.98	25	2.99	821	43.8	214
2019-20	570	3.72	250	30.50	25	2.94	845	43.8	220
2020-21	591	3.68	253	30.02	25	2.89	869	43.8	227
2021-22	612	3.64	257	29.52	25	2.85	894	43.7	233
2022-23	634	3.60	259	29.02	26	2.80	919	43.7	240
2023-24	657	3.56	262	28.52	26	2.75	945	43.7	247
2024-25	680	3.52	264	28.00	26	2.70	971	43.7	254
2025-26	704	3.49	267	27.48	26	2.66	997	43.7	260
2026-27	728	3.46	269	26.95	27	2.61	1023	43.7	267
Ave. Growth (2017-2027)	3.69%						2.91%		2.93%

Table 1-33: District-wise Sale (GWh), Generation (GWh) and Demand (MW) Forecast (District: Abbotabad)

Year	Energy Sale		Distribution Losses		Transmission Losses		Generation	Load Factor	Peak Demand
	(GWh)	G.R (%)	(GWh)	%	(GWh)	%	(GWh)	%	(MW)
2016-17	826		387	31.92	39	3.08	1251	49.0	292
2017-18	863	4.55	396	31.46	39	3.04	1299	49.1	302
2018-19	900	4.30	404	30.98	40	2.99	1345	49.1	312
2019-20	938	4.14	412	30.50	41	2.94	1390	49.2	323
2020-21	976	4.09	419	30.02	42	2.89	1436	49.2	333
2021-22	1016	4.05	425	29.52	42	2.85	1483	49.2	344
2022-23	1056	4.01	432	29.02	43	2.80	1531	49.3	355
2023-24	1098	3.97	438	28.52	43	2.75	1580	49.3	366
2024-25	1141	3.93	444	28.00	44	2.70	1629	49.4	377
2025-26	1186	3.90	449	27.48	45	2.66	1680	49.4	388
2026-27	1232	3.87	454	26.95	45	2.61	1731	49.4	400
Ave. Growth (2017-2027)	4.08%						3.30%		3.21%

Table 1-34: District-wise Sale (GWh), Generation (GWh) and Demand (MW) Forecast (District: Haripur)

Year	Energy Sale		Distribution Losses		Transmission Losses		Generation	Load Factor	Peak Demand
	(GWh)	G.R (%)	(GWh)	%	(GWh)	%	(GWh)	%	(MW)
2016-17	1661		585	26.05	71	3.08	2317	64.7	409
2017-18	1790	7.78	632	26.09	76	3.04	2497	66.2	430
2018-19	1881	5.08	659	25.94	78	2.99	2618	66.8	447
2019-20	1949	3.62	674	25.69	79	2.94	2702	67.1	460
2020-21	2019	3.59	688	25.42	81	2.89	2788	67.4	472
2021-22	2091	3.57	702	25.14	82	2.85	2875	67.7	485
2022-23	2165	3.55	716	24.84	83	2.80	2964	68.0	498
2023-24	2242	3.53	729	24.53	84	2.75	3054	68.3	511
2024-25	2320	3.51	741	24.20	85	2.70	3146	68.5	524
2025-26	2401	3.49	752	23.86	86	2.66	3240	68.8	538
2026-27	2484	3.47	763	23.50	87	2.61	3335	69.0	552
Ave. Growth (2017-2027)	4.11%						3.71%		3.04%

Table 1-35: District-wise Sale (GWh), Generation (GWh) and Demand (MW) Forecast (District: Mansehra)

Year	Energy Sale		Distribution Losses		Transmission Losses		Generation	Load Factor	Peak Demand
	(GWh)	G.R (%)	(GWh)	%	(GWh)	%	(GWh)	%	(MW)
2016-17	454		212	31.88	21	3.08	687	46.2	170
2017-18	473	4.23	217	31.42	22	3.04	711	46.3	175
2018-19	492	4.00	220	30.95	22	2.99	734	46.3	181
2019-20	511	3.82	224	30.47	22	2.94	757	46.3	186
2020-21	530	3.78	227	29.98	23	2.89	779	46.4	192
2021-22	550	3.74	230	29.49	23	2.85	802	46.4	198
2022-23	570	3.70	233	28.99	23	2.80	826	46.4	203
2023-24	591	3.66	235	28.49	23	2.75	850	46.4	209
2024-25	612	3.63	238	27.97	24	2.70	874	46.4	215
2025-26	634	3.60	240	27.45	24	2.66	898	46.5	221
2026-27	657	3.57	242	26.92	24	2.61	923	46.5	227
Ave. Growth (2017-2027)	3.77%						2.99%		2.94%

3.3.4 Coincidence Factors

The total energy demand of a number of individual consumers is determined as the simple sum of their individual energy consumption values. The total peak load, however, is calculated as the diversified sum of their individual peak load levels. The coincidence factor, as its name implies, is a general term which measures the coincidence between the peak loads of any number of individual consumers or consumer groups over a specified time period in order to compute a combined peak. Mathematically, it is the inverse of the diversity factor.

The daily coincidence factor is determined by comparing the daily load patterns of each consumer or group under consideration. In this case, the sum of the individual hourly (or 15-minute) peaks would determine the overall daily load pattern and the overall peak load. Suppose one consumer (or group) consumes energy only in the morning and a second consumer (or group) consumes energy only in the evening, the coincidence factor between these two consumers would be zero and the peak load of the combined group would be the peak of the larger consumer. Conversely, if both groups consumed all energy at the same hour, the coincidence factor would be one and the combined peak would be the sum of the two peaks. In practice, the coincidence factor is found between these two extremes.

Coincidence factors can be determined between any group and sub-group of consumers whether it is domestic versus commercial or Lahore versus Islamabad, provided that reasonable estimates of the appropriate load patterns are available. Typically, these patterns are not readily available and must be synthesized from incomplete or estimated data. In addition, all coincidence factors calculated from these load patterns are approximations of the corresponding instantaneous peak faced by the system. In fact, a common practice is to define this instantaneous peak as the bench mark and specify all coincidence factors in relation to this peak and time. The advantage of this approach is that all peak can be easily converted into their contribution to the overall system peak, the disadvantage is that the relationship between any two groups cannot be so clearly specified and will likely be incorrectly specified.

The Power Market Survey Model depends upon specified coincidence factors between consumption categories and between consumption areas in the aggregation of peak loads from consumers to the peaks at grid stations and at DISCO level and at the level of overall system peak. The coincidence factors estimated for the medium term model have been based on the limited available System records of the peak loads at various points in their respective systems.

3.3.5 Load Shedding

Actual consumption data is also adjusted for un-served demands attributed to load shedding and to voluntary restraint by consumers (e.g. an industrial consumer who agrees to close his plant or switch to captive generation during peak hours). The load shedding data is collected from National Power Control Center (NPCC) of NTDC and also from the Power Dispatch Centres of each DISCO. Now a days, all the load shedding is managed by each DISCO at its 11 kV level.

3.4 Forecast Calculations

The forecast calculations involve three basic steps. Firstly, an energy forecast is determined at the area (or subarea) level using per consumer growth rates and incremental consumption estimates from the data base. This is then converted to a peak demand forecast, again at the area (or subarea) level using the input load and diversity factors. Then transmission and

distribution losses are added and final step is to accumulate the areas into their corresponding grid stations, and grid stations into their DISCO and finally all DISCOs to form the system.

3.5 Energy Calculations

The basic calculation unit is the area or subarea where applicable. The database provides the base year energy consumption level for each of the six consumption categories (Domestic, Commercial, Public Lighting, Small Industry, Private Tube Wells and Medium & Large Industry). The database also includes the peak demand associated with the medium and large industry category. The domestic energy forecast for year 1 (the base year is indicated as year 0) is calculated by multiplying the base year consumption by the domestic per consumer growth rate to account for growth in the intensity of use in the sector, and then incremental consumption listed in the database is added to account for new use in the sector. This process is repeated for the remaining five energy sectors (plus the medium and large industrial demand) for the entire forecast period (remaining 10 years). The total energy consumed in the subarea for each year of the forecast period is then computed.

3.6 Peak Demand Calculations

The annual energy sale values for each of the consumer category (domestic, commercial, public lighting, small industry and private tube well) are converted to peak demand using the load factors listed in the appropriate input parameter file and then adjusted to account for coincidence within the category. The annual peak demand for the subarea is computed as the sum of the individual category peaks multiplied by coincidence factors within the subarea. The sub area peak demands are accumulated to an area by applying proper coincidence factors.

3.7 Accumulations

The total energy and peak demand at a given grid station is calculated as the sum of all the areas and subareas in that grid station's service area plus an allowance for distribution losses. Peak demand estimates are accumulated and different coincidence factors applied to city, town and village areas within the service area. The total energy and peak demand within a given DISCO is the sum of all grid stations in that DISCO plus traction and an allowance for transmission losses. Peak demands are again diversified in the accumulation, and the system totals are obtained from DISCO's total with some coincidence.

4 PMS Forecast Results

4.1 Recorded Forecast & Computed Forecast

The term 'Recorded Forecast' means the energy sale figures used in the forecast has not been adjusted for un-served energy (load shedding). Forecasted sale, growth rates, transmission and distribution losses, generation requirement and peak demand without incorporating load shedding has been shown in **Table 1-1.** This forecast is also called the Low Forecast.

The term 'Computed Forecast' means the energy sale figures used in forecast have been adjusted for un-served energy (load shedding). Forecasted energy sale, growth rates, transmission and distribution losses, generation requirement and peak demand with incorporating load shedding has been shown in **Table 1-2.** Peak demand of this table has been demonstrated graphically in **Figure 1-6.** Similarly, energy sale and energy purchased also have been shown in **Figure 1-7.** The difference between energy purchased and energy sale shows all losses of the DISCO. This forecast is also called the Base Forecast. If there had not been the load shedding, the recorded forecast (Low Forecast) would have been the actual forecast i.e. the Base Forecast.

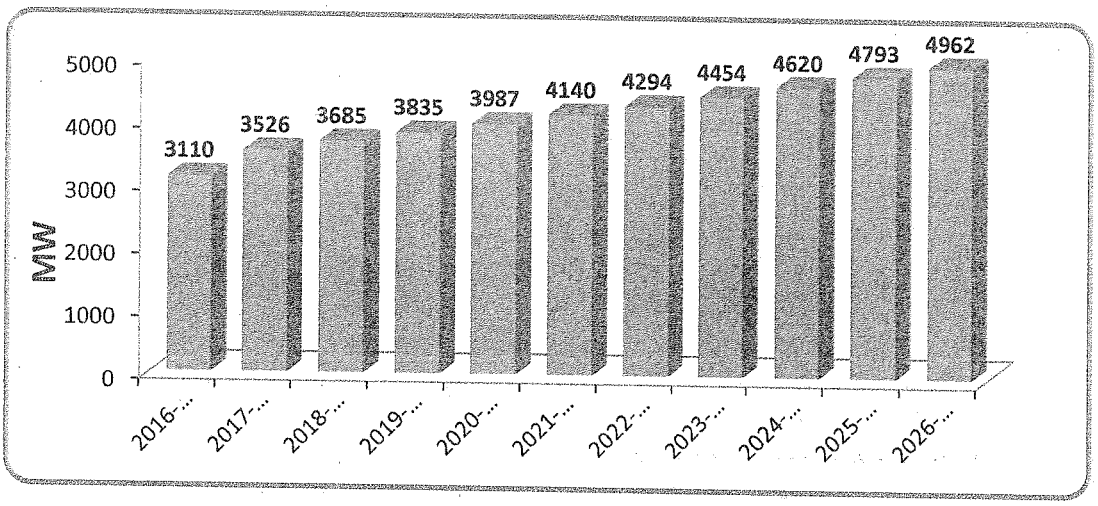

Figure 1-6: Computed Peak Demand

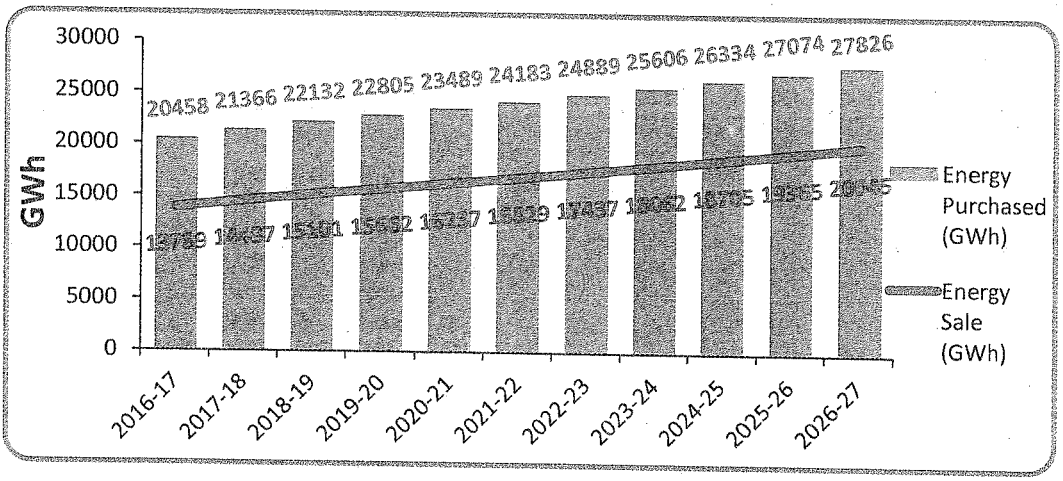

Figure 1-7: Energy Purchased Vs Energy Sale

4.2 Category-wise Forecasted Energy Sale (GWh)

Amount and percentage share of each consumer category in the total consumption for the year 2019-20 and year 2025-26 have been depicted in **Figure 1-8**. If we critically analyze **Figure 1-2** and **Figure 1-8**, it is evident that industrial sector has shown an increase from 23% to 27%, from year 2002-03 up to year 2026-27 which is a healthy sign for the country's growth.

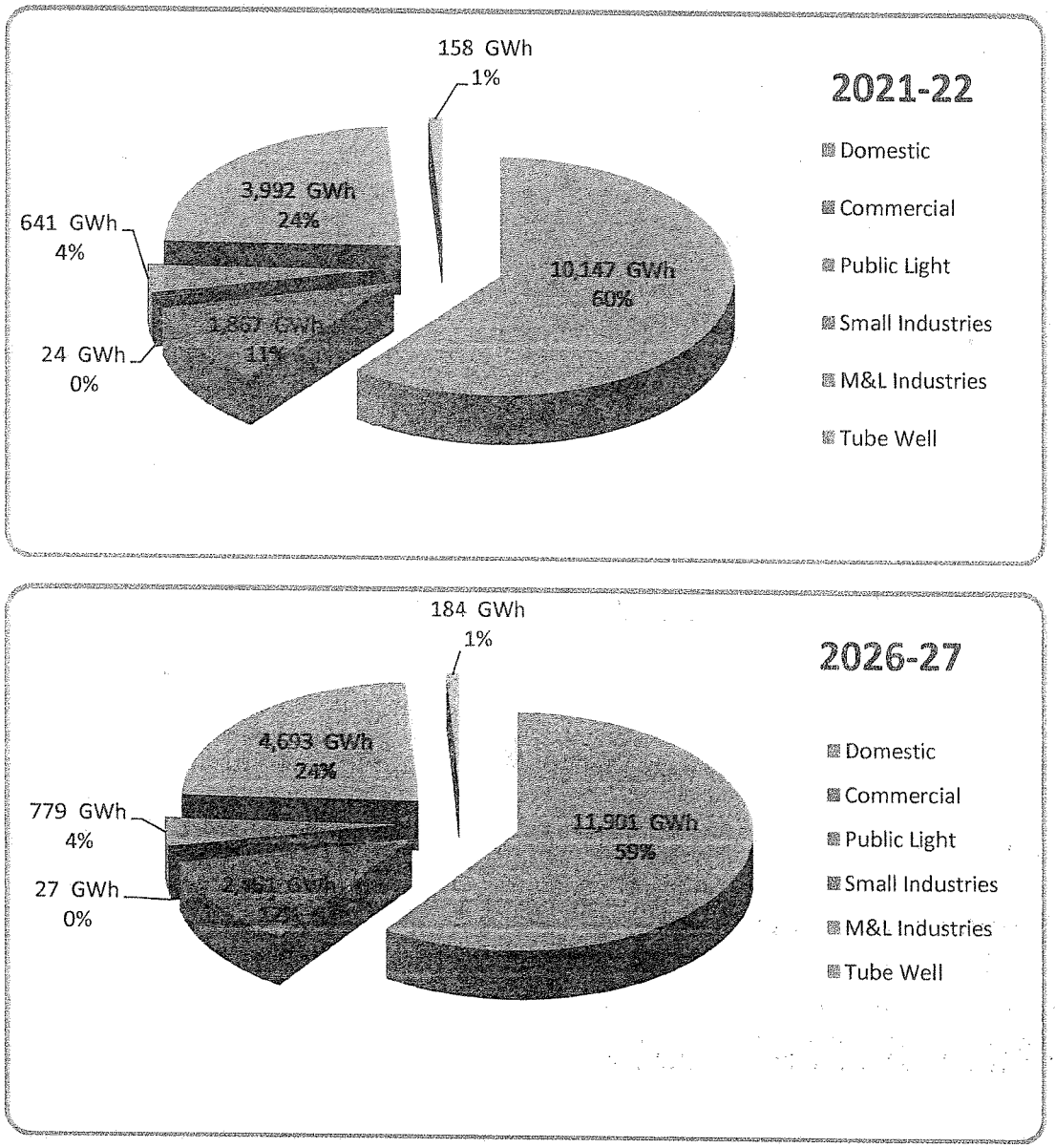

Figure 1-8: Forecasted Category Wise Sale

The category-wise forecasted sale incorporating load shedding effect (Low Forecast) is shown in **Table 1-3.** The category-wise forecasted sale with incorporating load shedding effect (Base Forecast) is shown in **Table 1-4.**

4.3 Category wise Forecasted Demand (MW)

The forecast of consumption (Demand) in MW without and with incorporating load shedding impact is shown in Table 1-5 and Table 1-6 respectively.

4.4 Civil Administrative Area Forecast

The PESCO service area comprises of seven administrative divisions i.e. Peshawar, Mardan, Kohat, Bannu, Dera Ismail Khan, Malakand, Hazara which comprises of 21 districts, Peshawar, Charsada, Nowsehra, Mardan, Sawabi, Kohat, Hangu, Karak, Bannu, Lakki, D.I Khan, Tank, Swat, Bunair, Upper Dir, Shangla, Malakand, Chitral , Lower Dir, Abbotabad, Haripur and Mansehra. The civil administrative Division-wise and District-wise energy and demand projections have been presented in **Table 1-7** to **Table 1-35**. The last column of the table contains peak demand.

4.5 Monthly Demand (MW) and Energy (GWh) Purchase Projections

The Month–wise demand (MW) and energy (GWh) purchase projections have been presented in Table 1-36 and Table 1-37. To develop the projection, monthly demand and energy factors are computed for last five years and then its average is taken as a base factor for monthly demand and Energy projection. For this, each month peak is calculated from the ratio of the historical peak of that particular month to the annual historical peak of that year. Whereas each month Energy purchase is calculated from the ratio of historical monthly energy purchase of that particular month to annual energy purchase of that year. In this manner, historical ratios are calculated for each month of the last five years. The average of these values is taken as the monthly factor and multiplied with the peak demand of the year to obtain monthly peak demand and energy purchase.

4.6 List of Overloaded Substations

The list of overloaded substations will inform about that particular year in which a substation will be overloaded. The overloading criterion of a substation has been considered as 85% i.e. when any substation is 85% loaded, the remedial measures should be taken in the form of new substation or augmentation of the existing transformers. **Table 1-38** & **Table 1-39** show the lists of overloaded substations based on loading criterion of 85% and 100% respectively. Based on the loading criterion of 85%, the number of overloaded substations in year 2016-17 (base year) is eight (08). Seven (07) and three (03) additional grids will be overloaded in years 2017-18 and 2018-19 respectively. In total, there would be 18 overloaded substations up to year 2017-18 with loading criterion of 85%.

4.7 List of Grids with their Codes and MVA Capacities

The list of substations in a DISCO mentioning number of transformers with MVA capacities at each substation is provided in the **Table 1-40.**

4.8 Peak Demand of Substations

A projection of peak demand at a substation is the most peculiar feature of this report. It is indeed a very rare and useful forecast. It provides the basis for transmission system expansion planning. It also provides a very solid ground for proposing a new substation or augmentation, extension and conversion of a sub-station. Only distribution losses have been considered in preparing the grid station peak demand forecast. The peak demand of each substation, existing

as well as proposed, situated in the service area of the DISCO has been shown in the **Table 1-41**.The proposed substations during the present period have also been incorporated in this table. The demand of the proposed substations is shown on the existing grids before the commissioning of proposed substation and it is shifted to the proposed substation after its commissioning year.

4.9 Peak Demands of existing, transit and proposed grids (Family of Grids)

This report also shows the projection of peak demands of existing substations as well as the demands that will be transferred to the proposed substation at when commissioned. This is also a very important forecast to accurately plan the capacity of the proposed substations as well as the status of the existing substation after the load is transferred to the proposed substation. It accurately forecast the demand in MW that will be transferred from one existing grid to the proposed grid and as well as the total load that will be transferred to the proposed grid. The peak demands of existing, transit and proposed grids are shown in Table 1-42. Transit grid is a new term introduced in the current issue of the report. It is a virtual or temporary substation with a particular name and number on which the necessary load from one overloaded substation is shifted temporarily during base year. In **Table 1-42**, the proposed grids are shown with zero loads and the transit grid shows the estimated load that will be shifted from one existing substation to the proposed grid when it is commissioned. This table helps in finding out the amount of load in the future that will be shifted to the proposed grid from the existing grid when it is commissioned.

4.10 Per Capita Consumption

Per capita consumption is a very vivid indicator of development in a country. Usually developed countries have very high per capita consumption. Per capita consumption (kWh/person) for the year 2011-12, 2014-15, 2015-16, 2021-22, and 2026-27 is given in **Figure 1-9**.(The consumption for the years 2021-22, and 2026-27 are obtained from forecasted data.) . Population data is obtained from Pakistan Census 2016-17.

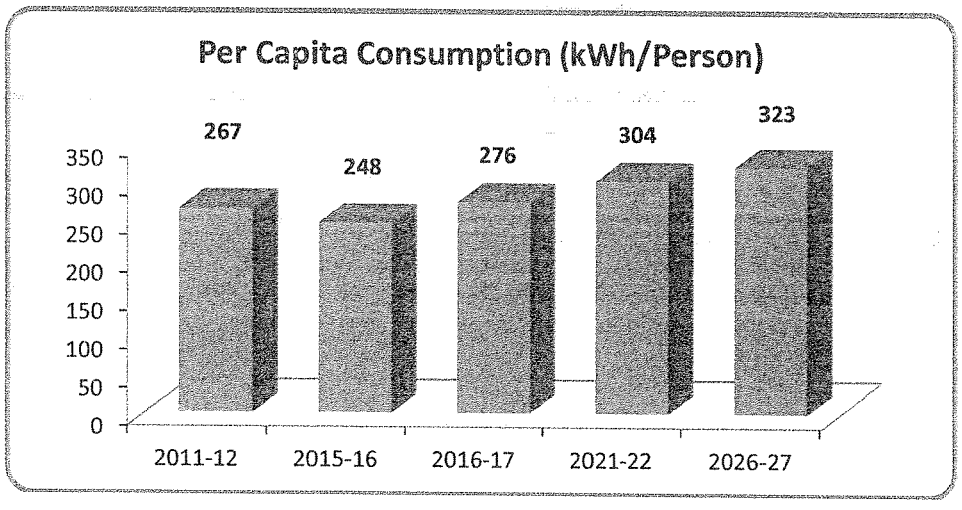

Figure 1-9: Per Capita Consumption

4.11 Category-wise Energy and Maximum Demand Projections for each Substation

The category-wise energy and maximum demand projections for each substation have been presented in **Table 1-43.** The last two columns of the table contain power factor and reactive power values. The maximum demand for the DISCO in this table is the diversified sum of the individual peak demands of each substation and this figure will coincide with the peak demand of the respective year. In order to reduce the volume of the report, only the values of the last year i.e. 2026-27-have been presented in the table.

Table 1-1: Forecast without incorporating Load Shedding effect (Low Forecast)

Year	Energy Sale		Distribution Losses		Energy Received at 11 kV	Peak Demand at 11 kV	Transmission Losses		Energy Sent out	Load Factor	Peak Demand
	(GWh)	G.R (%)	(GWh)	(%)	GWh	MW	(GWh)	(%)	(GWh)	(%)	(MW)
2016-17	8432		3693	30.5	12126	2107	385	3.08	12511	65.7	2174
2017-18	8950	6.1	3851	30.1	12801	2441	401	3.04	13202	59.9	2518
2018-19	9404	5.1	3971	29.7	13375	2543	412	2.99	13787	60.0	2621
2019-20	9827	4.5	4067	29.3	13894	2637	421	2.94	14315	60.1	2717
2020-21	10261	4.4	4160	28.8	14421	2732	430	2.89	14850	60.2	2814
2021-22	10706	4.3	4249	28.4	14955	2829	438	2.85	15394	60.3	2912
2022-23	11164	4.3	4335	28.0	15499	2928	446	2.80	15945	60.4	3012
2023-24	11634	4.2	4416	27.5	16050	3027	454	2.75	16504	60.5	3113
2024-25	12117	4.2	4493	27.0	16610	3129	462	2.70	17072	60.6	3215
2025-26	12614	4.1	4565	26.6	17179	3231	469	2.66	17648	60.7	3319
2026-27	13124	4.0	4632	26.1	17757	3335	476	2.61	18233	60.8	3425
Ave. Growth (2017-2027)	4.52%				3.89%	4.70%			3.84%		4.65%

Table 1-2: Computed Forecast (Base Forecast)

Year	Energy Sale		Distribution Losses		Energy Received at 11 kV	Peak Demand at 11 kV	Transmission Losses		Energy Sent out	Load Factor	Peak Demand
	(GWh)	G.R (%)	(GWh)	(%)	GWh	MW	(GWh)	(%)	(GWh)	(%)	(MW)
2016-17	13789		6039	30.5	19828	3110	630.2	3.08	20458	72.8	3209
2017-18	14487	5.1	6230	30.1	20717	3526	648.4	3.04	21366	67.1	3636
2018-19	15101	4.2	6369	29.7	21471	3685	661.3	2.99	22132	66.5	3798
2019-20	15662	3.7	6473	29.2	22135	3835	670.7	2.94	22805	65.9	3952
2020-21	16237	3.7	6572	28.8	22809	3987	679.7	2.89	23489	65.3	4106
2021-22	16829	3.6	6666	28.4	23495	4140	688.4	2.85	24183	64.8	4262
2022-23	17437	3.6	6755	27.9	24192	4294	696.7	2.80	24889	64.3	4418
2023-24	18062	3.6	6839	27.5	24901	4454	704.7	2.75	25606	63.8	4580
2024-25	18705	3.6	6917	27.0	25622	4620	712.3	2.70	26334	63.3	4748
2025-26	19365	3.5	6989	26.5	26354	4793	719.5	2.66	27074	62.8	4924
2026-27	20045	3.5	7055	26.0	27100	4962	726.3	2.61	27826	62.3	5095
Ave. Growth (2017-2027)	3.81%				3.17%	4.78%			3.12%		4.73%

Table 1-3: Consumer Category Wise Sale – GWh without incorporating Load Shedding effect (Low Forecast)

Year	Domestic		Commercial		Public Light		Small Industries		M&L Industries		Tube Well		Total	
	Energy	G.R (%)	Energy	G.R (%)	Energy	G.R (%)	Energy	G.R (%)	Energy	G.R (%)	Energy	G.R (%)	Energy	G.R (%)
2016-17	5233		855		13		321		1927		83		8432	
2017-18	5473	4.6	914	6.8	14	2.2	336	4.6	2129	10.5	86	3.7	8950	6.1
2018-19	5716	4.4	975	6.7	14	2.2	351	4.5	2260	6.1	89	3.7	9404	5.1
2019-20	5965	4.4	1039	6.6	14	2.1	366	4.5	2350	4.0	92	3.6	9827	4.5
2020-21	6218	4.3	1106	6.5	14	2.1	383	4.4	2443	4.0	95	3.6	10261	4.4
2021-22	6477	4.2	1177	6.4	15	2.1	399	4.4	2539	3.9	99	3.6	10706	4.3
2022-23	6741	4.1	1251	6.3	15	2.1	417	4.4	2638	3.9	102	3.5	11164	4.3
2023-24	7010	4.0	1329	6.2	15	2.1	435	4.3	2739	3.9	106	3.5	11634	4.2
2024-25	7285	3.9	1410	6.1	16	2.1	453	4.3	2844	3.8	110	3.5	12117	4.2
2025-26	7565	3.8	1496	6.1	16	2.1	473	4.2	2951	3.8	113	3.4	12614	4.1
2026-27	7850	3.8	1586	6.0	16	2.1	493	4.2	3062	3.8	117	3.4	13124	4.0
Ave. Growth (2017-2027)	4.1%		6.4%		2.1%		4.4%		4.7%		3.5%		4.5%	

Table 1-4: Consumer Category Wise Sale – GWh (Base Forecast)

Year	Domestic		Commercial		Public Light		Small Industries		M&L Industries		Tube Well		Total	
	Energy	G.R (%)	Energy	G.R (%)	Energy	G.R (%)	Energy	G.R (%)	Energy	G.R (%)	Energy	G.R (%)	Energy	G.R (%)
2016-17	8558		1399		22		525		3150		135		13789	
2017-18	8863	3.6	1484	6.1	22	2.1	546	4.1	3432	8.9	140	3.3	14487	5.1
2018-19	9174	3.5	1573	6.0	23	2.1	569	4.1	3619	5.4	144	3.2	15101	4.2
2019-20	9492	3.5	1666	5.9	23	2.1	592	4.1	3740	3.3	149	3.2	15662	3.7
2020-21	9816	3.4	1764	5.9	24	2.1	616	4.1	3864	3.3	153	3.2	16237	3.7
2021-22	10147	3.4	1867	5.8	24	2.1	641	4.0	3992	3.3	158	3.2	16829	3.6
2022-23	10484	3.3	1974	5.8	25	2.1	667	4.0	4124	3.3	163	3.1	17437	3.6
2023-24	10828	3.3	2087	5.7	25	2.1	693	4.0	4260	3.3	168	3.1	18062	3.6
2024-25	11178	3.2	2206	5.7	26	2.1	721	4.0	4400	3.3	174	3.1	18705	3.6
2025-26	11536	3.2	2330	5.6	26	2.1	750	4.0	4544	3.3	179	3.1	19365	3.5
2026-27	11901	3.2	2461	5.6	27	2.1	779	3.9	4693	3.3	184	3.1	20045	3.5
Ave. Growth (2017-2027)	3.4%		5.8%		2.1%		4.0%		4.1%		3.2%		3.8%	

Table 1-5: Consumer Category Wise Demand – MW without incorporating Load Shedding effect (Low Forecast)

Year	Domestic		Commercial		Public Light		Small Industries		M&L Industries		Tube Well		Total (Diversified)	
	Demand	G.R (%)	Demand	G.R (%)	Demand	G.R (%)	Demand	G.R (%)	Demand	G.R (%)	Demand	G.R (%)	Demand	G.R (%)
2016-17	1118		152		3		29		279		14		1463	
2017-18	1293	15.7	180	18.2	3	13.1	34	15.4	332	18.8	16	14.3	1705	16.5
2018-19	1349	4.3	192	6.6	3	2.2	35	4.2	349	5.1	16	3.2	1786	4.8
2019-20	1406	4.2	204	6.5	3	2.1	37	4.2	360	3.1	17	3.2	1863	4.3
2020-21	1464	4.1	218	6.4	3	2.2	38	4.1	371	3.1	17	3.2	1942	4.3
2021-22	1524	4.1	231	6.3	4	2.1	40	4.1	382	3.1	18	3.1	2024	4.2
2022-23	1584	4.0	246	6.2	4	2.1	42	4.1	394	3.1	18	3.1	2107	4.1
2023-24	1646	3.9	261	6.2	4	2.2	43	4.1	407	3.1	19	3.1	2193	4.1
2024-25	1709	3.8	277	6.1	4	2.1	45	4.0	419	3.1	19	3.1	2281	4.0
2025-26	1773	3.8	294	6.0	4	2.1	47	4.0	432	3.1	20	3.1	2371	4.0
2026-27	1839	3.7	311	6.0	4	2.1	49	4.0	446	3.1	21	3.0	2463	3.9
Ave. Growth (2017-2027)	5.1%		7.4%		3.2%		5.2%		4.8%		4.2%		5.3%	

ANNEX-2

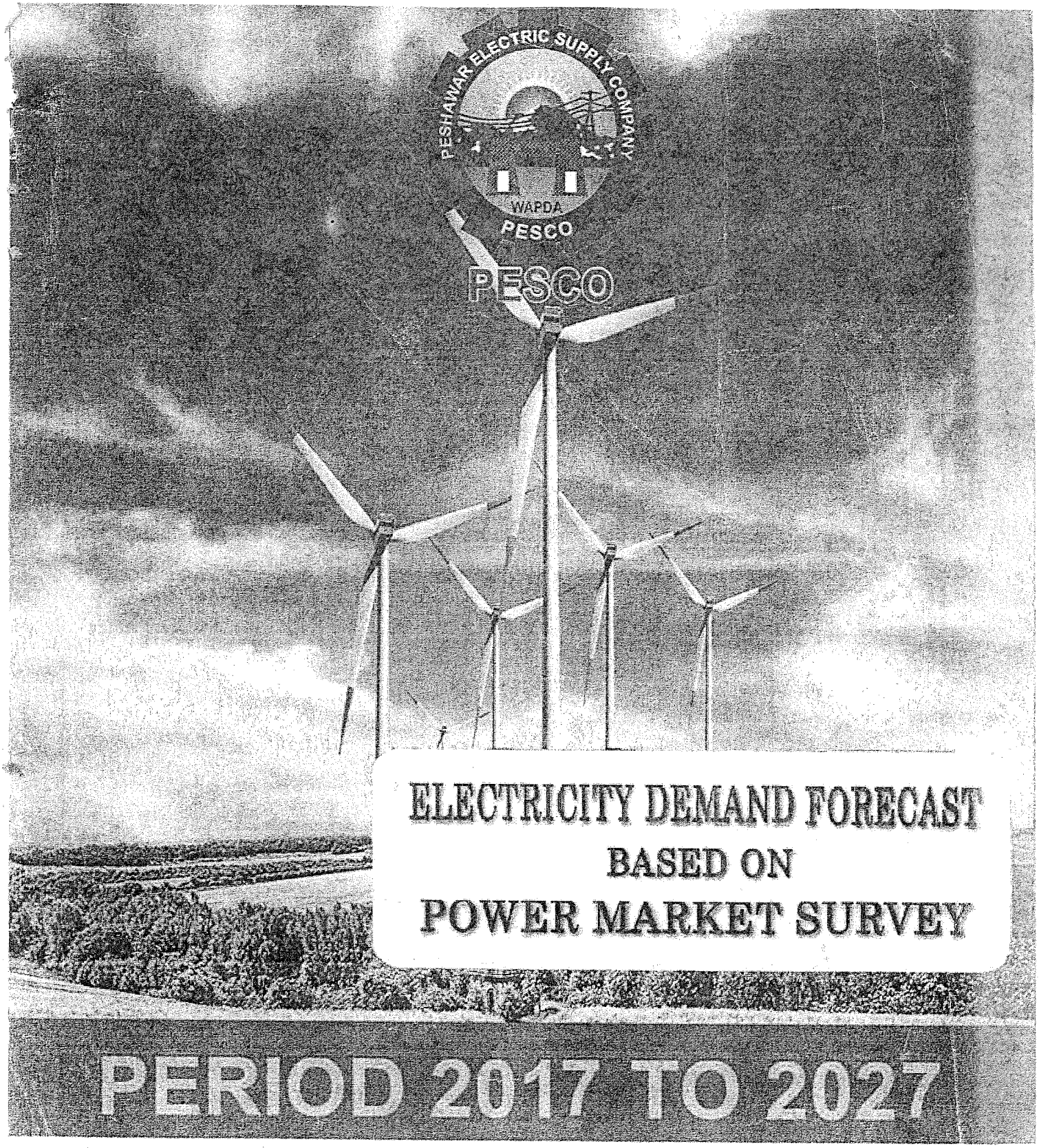

ELECTRICITY DEMAND FORECAST
BASED ON
POWER MARKET SURVEY

PERIOD 2017 TO 2027

PREPARED BY PESCO
WITH FACILITATION FROM
CENTRAL POWER PURCHASING AGENCY
GUARANTEE LIMITED

JUNE 2018

Executive Summary

Peshawar Electric Supply Company (PESCO) is supplying power to civil divisions of Peshawar, Mardan, Kohat, Bannu, Dera Ismail Khan, Malakand, Hazara and their respective districts. This company came into existence in the year 2001 after unbundling of WAPDA system. Earlier it was known as Peshawar Area Electricity Board (AEB) in the year 2001, its distribution network comprised of fifty-nine 132 kV, thirty-two 66 kV sub-stations. In 2016-17, PESCO operates seventy (70) 132 kV, thirteen (13) 66 kV and four (04) 33 kV sub-stations.

In the year 2016-17, peak demand of PESCO was 2,107 MW, energy sale was 8,432 GWh, and energy purchased was 12,511 GWh. In the total energy sale for the year 2016-17 the shares of domestic sector and industrial sector were 62% and 28% respectively. The total number of consumers in 2016-17 was 3.18 million, and number of consumers in various categories was 2.80 million in domestic, 0.32 million in commercial, 0.03 million in industrial sector and 0.02 million in agricultural sector.

This forecast has been computed on the basis of Power Market Survey (PMS) methodology by the PESCO (PMS) team with facilitation from Central Power Purchasing Agency Guarantee Limited (CPPA-G). The year 2016-17 has been taken as the base year and the forecast horizon is ten years up to 2026-27. The base year sale data (consumer-category wise energy sale of each feeder) and the expected spot loads data at the locations of different sub-stations have been collected by PESCO Power Market Survey team. Data for the base year has also been adjusted for the estimated amount of un-served energy (load shedding) in order to have realistic figures of energy consumption.

Forecast results show that in the years 2021-22 and 2026-27 energy sale will be 16,829 GWh and 20,045 GWh, peak demand will be 4,140 MW and 4,962 MW, and energy purchased will be 24,183 GWh and 27,826 GWh respectively. For the period 2016-17 to 2026-27, annual average compound growth rate of energy sale, peak demand and energy purchased will be 3.81%, 4.78% and 3.12% respectively. The number of substations with 100% loading criteria in year 2016-17 (base year) is three (03). No additional grids will be at 100% or above loading in years 2017-18 and 2018-19 respectively.

A realistic forecast saves over investments as well as under investments, meaning thereby timely recovery of revenue and no constraints in the supply of power (load shedding) respectively. This kind of forecast can only be prepared by applying proper methodology with authentic data. The results of previous PMS forecasts were very close to the actual which proves the authenticity of the methodology and data. This report highlights the salient features of load forecast of the company.

It is pertinent to mention here that CPPA-G only facilitated in the preparation of this forecast as it is the prime responsibility of the DISCOs to prepare their own forecast and the DISCO prepared the same. Further, a transition plan has been prepared by CPPA-G to help build the overall capacity of the DISCOs in-terms of people, processes and technology so that DISCOs start doing this forecast without any assistance.

Further it is apprised that on-behalf of the DISCOs and as an agent of the DISCOs procuring power on their behalf, CPPA-G will continue to only consolidate the forecasts on Country level and submit to NEPRA for approval on annual basis (as per Distribution Planning Code section DPC-5).

We are thankful that PESCO prepared its forecast by getting CPPA-G's assistance. All data is collected and provided by PESCO. The CPPA-G doesn't own any error responsibility.

Table of Contents

Executive Summary i

1 Introduction 1

2 Historical Supply and Demand Analysis 3

2.1 Category-wise Sale 3

2.2 Transmission and Distribution Losses 4

2.3 Recorded and Computed Peak Demand 5

2.4 Number of Consumers 6

3 Power Market Survey Methodology 8

3.1 Overview 8

3.2 Survey Base Data 8

3.3 Input Parameters 9

3.3.1 Growth Rates 9

3.3.2 Losses 10

3.3.3 Load Factors 10

3.3.4 Coincidence Factors 11

3.3.5 Load Shedding 11

3.4 Forecast Calculations 11

3.5 Energy Calculations 12

3.6 Peak Demand Calculations 12

3.7 Accumulations 12

4 PMS Forecast Results 13

4.1 Recorded Forecast & Computed Forecast 13

4.2 Category-wise Forecasted Energy Sale (GWh) 14

4.3 Category wise Forecasted Demand (MW) 15

4.4 Civil Administrative Area Forecast 15

4.5 Monthly Demand (MW) and Energy (GWh) Purchase Projections 15

4.6 List of Overloaded Substations 15

4.7 List of Grids with their Codes and MVA Capacities 15

4.8 Peak Demand of Substations 15

4.9 Peak Demands of existing, transit and proposed grids (Family of Grids) 16

4.10 Per Capita Consumption 16

4.11 Category-wise Energy and Maximum Demand Projections for each Substation 17

Disclaimer 93

List of Figures

Figure 1-1: Computed Peak Demand Forecast 1
Figure 1-2: Historical Category-wise Sale 3
Figure 1-3: Historical Energy Sale and Losses (Transmission and Distribution) with their percentages 5
Figure 1-4: Historical Recorded and Computed Peak Demands 5
Figure 1-5: Number of Consumers 6
Figure 1-6: Computed Peak Demand 13
Figure 1-7: Energy Purchased Vs Energy Sale 13
Figure 1-8: Forecasted Category Wise Sale 14
Figure 1-9: Per Capita Consumption 16
Figure 1-10: Distribution Network Map (PESCO) 92

List of Tables

Table 1-1: Forecast without incorporating Load Shedding effect (Low Forecast) 18
Table 1-2: Computed Forecast (Base Forecast) 19
Table 1-3: Consumer Category Wise Sale – GWh without incorporating Load Shedding effect (Low Forecast) 20
Table 1-4: Consumer Category Wise Sale – GWh (Base Forecast) 21
Table 1-5: Consumer Category Wise Demand – MW without incorporating Load Shedding effect (Low Forecast) 22
Table 1-6: Consumer Category Wise Demand – MW (Base Forecast) 23
Table 1-7: Division-wise Sale (GWh), Generation (GWh) and Demand (MW) Forecast (Division: Peshawar) 24
Table 1-8: Division-wise Sale (GWh), Generation (GWh) and Demand (MW) Forecast (Division: Mardan) 25
Table 1-9: Division-wise Sale (GWh), Generation (GWh) and Demand (MW) Forecast (Division: Kohat) 26
Table 1-10: Division-wise Sale (GWh), Generation (GWh) and Demand (MW) Forecast (Division: Bannu) 27
Table 1-11: Division-wise Sale (GWh), Generation (GWh) and Demand (MW) Forecast (Division: D.I.Khan) 28
Table 1-12: Division-wise Sale (GWh), Generation (GWh) and Demand (MW) Forecast (Division: Malakand) 29
Table 1-13: Division-wise Sale (GWh), Generation (GWh) and Demand (MW) Forecast (Division: Hazara) 30
Table 1-14: District-wise Sale (GWh), Generation (GWh) and Demand (MW) Forecast (District: Peshawar) 31
Table 1-15: District-wise Sale (GWh), Generation (GWh) and Demand (MW) Forecast (District: Charsada) 32
Table 1-16: District-wise Sale (GWh), Generation (GWh) and Demand (MW) Forecast (District: Nowsehra) 33
Table 1-17: District-wise Sale (GWh), Generation (GWh) and Demand (MW) Forecast (District: Mardan) 34
Table 1-18: District-wise Sale (GWh), Generation (GWh) and Demand (MW) Forecast (District: Sawabi) 35
Table 1-19: District-wise Sale (GWh), Generation (GWh) and Demand (MW) Forecast (District: Kohat) 36
Table 1-20: District-wise Sale (GWh), Generation (GWh) and Demand (MW) Forecast (District: Hangu) 37
Table 1-21: District-wise Sale (GWh), Generation (GWh) and Demand (MW) Forecast (District: Karak) 38
Table 1-22: District-wise Sale (GWh), Generation (GWh) and Demand (MW) Forecast (District: Bannu) 39
Table 1-23: District-wise Sale (GWh), Generation (GWh) and Demand (MW) Forecast (District: Lakki) 40
Table 1-24: District-wise Sale (GWh), Generation (GWh) and Demand (MW) Forecast (District: D.I Khan) 41
Table 1-25: District-wise Sale (GWh), Generation (GWh) and Demand (MW) Forecast (District: Tank) 42
Table 1-26: District-wise Sale (GWh), Generation (GWh) and Demand (MW) Forecast (District: Swat) 43
Table 1-27: District-wise Sale (GWh), Generation (GWh) and Demand (MW) Forecast (District: Upper Dir) 44
Table 1-28: District-wise Sale (GWh), Generation (GWh) and Demand (MW) Forecast (District: Bunair) 45

Table 1-29: District-wise Sale (GWh), Generation (GWh) and Demand (MW) Forecast (District: Shangla) 46
Table 1-30: District-wise Sale (GWh), Generation (GWh) and Demand (MW) Forecast (District: Malakand) 47
Table 1-31: District-wise Sale (GWh), Generation (GWh) and Demand (MW) Forecast (District: Chitral) 48
Table 1-32: District-wise Sale (GWh), Generation (GWh) and Demand (MW) Forecast (District: Lower Dir) 49
Table 1-33: District-wise Sale (GWh), Generation (GWh) and Demand (MW) Forecast (District: Abbotabad) 50
Table 1-34: District-wise Sale (GWh), Generation (GWh) and Demand (MW) Forecast (District: Haripur) 51
Table 1-35: District-wise Sale (GWh), Generation (GWh) and Demand (MW) Forecast (District: Mansehra) 52
Table 1-36: Monthly Peak Demand Forecast (Base Forecast) 53
Table 1-37: Monthly Energy Purchased Forecast (Base Forecast) 54
Table 1-38: List of Overloaded Substations during Period 2016-17 to 2026-27 Overloading Criterion= 85% 55
Table 1-39: List of Overloaded Substations during Period 2016-17 to 2026-27 Overloading Criterion=100% 57
Table 1-40: List of Grids with their Codes and MVA Capacities 59
Table 1-41: Maximum Demand (MW) of Substations (Base Forecast) 62
Table 1-42: Family of Grids (Existing, Proposed & Transit Grid) 69
Table 1-43: Category-wise Energy (kWh) and Maximum Demand (kW) of Substations for Year 2026-27 (Base Forecast) 80

1 Introduction

This report is the 26th issue of Power Market Survey forecast and is prepared by PESCO by getting assistance of CPPA-G. This forecast was previously published by Planning Power NTDCL and the current report is the first issue which is prepared by PESCO by getting assistance from CPPA. The report consists of year wise detailed forecast of energy sale and power demand for the whole company and each sub-station within the company's distribution network. In addition, forecast for Civil Administrative areas such as Divisions and Districts served by the company's distribution network is also computed and depicted in different tables. The forecasted peak demand of PESCO has been graphically presented in **Figure 1-1**.

Load forecasting is an important element of the power planning process involving prediction of energy and demand in the future. The forecast serves as the basis for demand and supply-side planning. Load forecasts are typically prepared by utilities for different time frames and the level of details required depends upon different planning applications and operations for which the forecast will be used.

Long term planning requires a system level forecast of total generation requirement and peak demand. On the other hand, transmission and distribution planning requires more load level and geographic details to assess location, timing and loading of individual lines, substations and transformation facilities. The following figure (Figure 1-1) shows the computed peak demand of PESCO for the current forecast period.

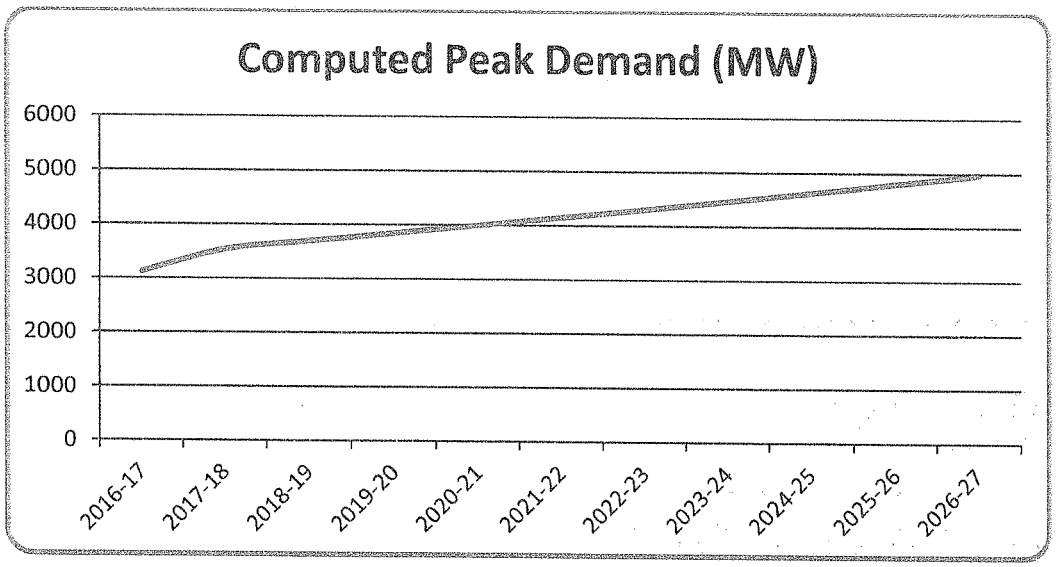

Figure 1-1: Computed Peak Demand Forecast

Forecasting models fall into the following three general categories:

- Trend models
- Econometric based models
- End-use models

Trend forecasts graphically or mathematically extrapolate past electricity demand trends into the future. They may be inadequate for short time periods where demographic changes in the underlying casual factors of load growth are not anticipated. Econometric models represent a more complex 'top-down' approach to forecasting and these models rely on the observed or the implied

relationship between past energy consumption and other variables defining past economic output (likewise GDP data), demographics and price or income variables. End-use models relate energy use to the physical appliances stock levels and use patterns or industrial process. These end use models represent a 'bottom-up' forecasting approach and normally incorporate disaggregate end use forecast and consumer survey techniques.

This report has been prepared on the basis of Power Market Survey Methodology and the model used is called Power Market Survey (PMS) model. It uses bottom up approach. This model is a form of end use model which provides energy and power projections for all distribution companies and all grid stations within a company's distribution network.

The PMS model relies on an extensive data base of historical sales. The data base includes historical figures of consumption by consumer type (i.e. domestic, industrial and commercial etc.) of each feeder of a grid station and overall consumption from a grid station. Actual consumption data is adjusted for un-served demands attributed to load shedding.

Energy forecasts are computed for each consumption category at the sub area level on the basis of a trend analysis of recent per consumer sales plus new consumer connection applications. Industrial forecasts are based on interviews with existing consumers, trend projections and a review of the applications for request of new and increased service. These analyses are repeated for each sub area for each of the years to be forecasted. The annual peak demand is determined from the resulting energy forecasts by using the load factors and diversity factors developed for each consumer category. Forecasts are then aggregated to system level.

Because the PMS forecast is based on a mix of end-use, trend projection and known consumer expansion plans, it cannot be used reliably to predict demand over the longer term. This model had not been created to predict impacts of changes in growth of different economic sectors or consumers categories over time, or changes in both the absolute and relative prices of electricity, and of changes in the relationships between income growth and electricity growth over time as a result of market saturation and technological change (in order to capture these changes CPPA-G is using another model called regression model). Regression model is used for long term forecasting as the changes in growth are occurred due to change in technology, life style over a longer time period.

The Power Market Survey forecast model most closely approaches the requirements of power system planning. It provides the level of detail required for siting studies and transmission and substation planning as well as the sectoral details necessary to assess different sectors growth rates and their impacts on load shapes for the system, DISCOs and grid stations. In addition, it also provides a reasonable approximation of unconstrained load growth because it makes specific provision for load shedding i.e. suppressed demand.

2 Historical Supply and Demand Analysis

2.1 Category-wise Sale

The costumers within the company can be segregated in different categories. The segregation is usually based upon the type of applications for which electricity is being used. Major categories include Domestic, Commercial, Small industries, Medium & Large industries and Agriculture.

The category-wise sale (GWh) along with percentage for the years 2002-03, 2006-07, and 2016-17 are given in **Figure 1-2**.

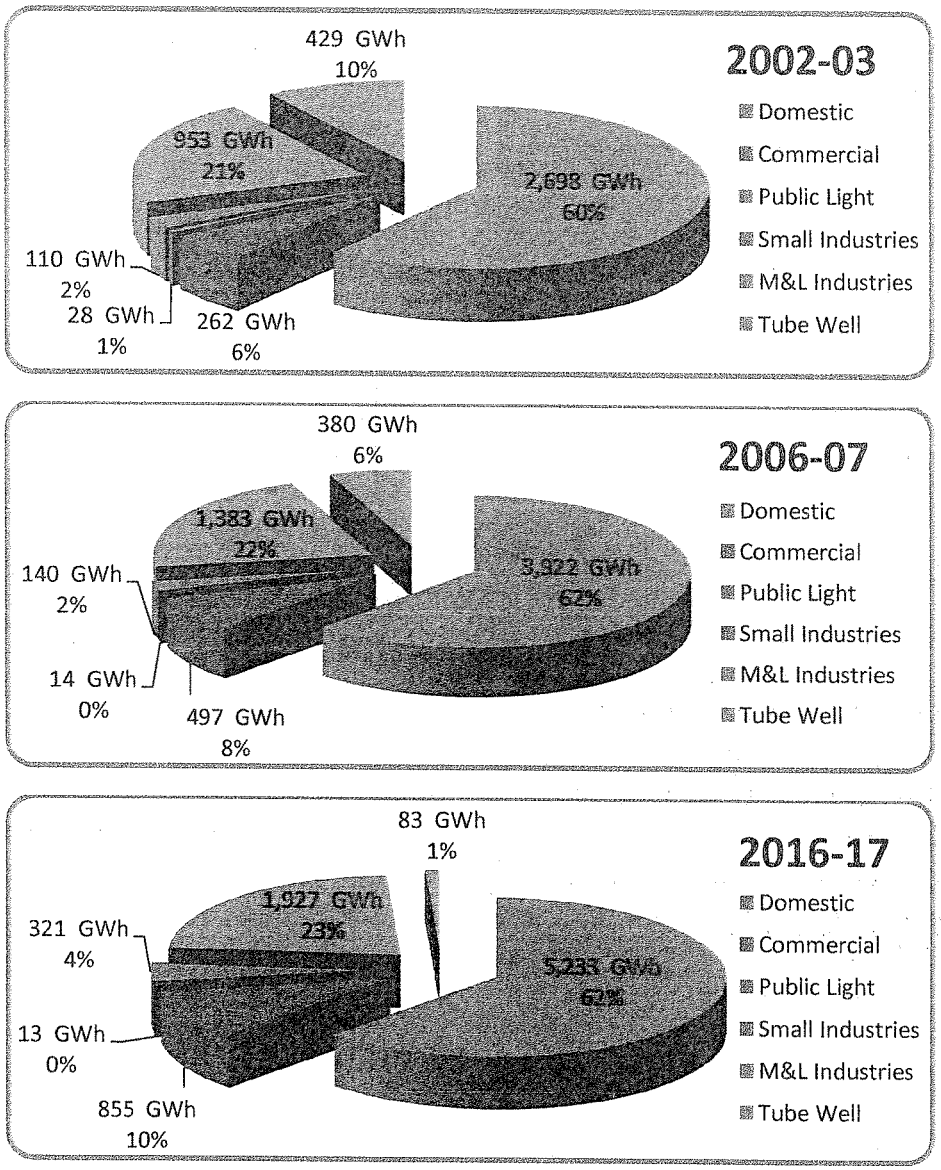

Figure 1-2: Historical Category-wise Sale

Figures of category-wise sale for the last five years i.e. 2012-13 to 2016-17 are given in the table below.

Table 2.1-1: Historical Sale of PESCO

Financial Year	Domestic (GWh)	Commercial (GWh)	Public Light (GWh)	Small Industries (GWh)	M&L Industries (GWh)	Tube Well (GWh)	Bulk (GWh)	Total (GWh)
2013	4050	550	20	207	1682	111	541	7162
2014	4207	622	14	203	1785	100	539	7471
2015	4299	654	14	203	1816	93	520	7599
2016	4484	703	13	203	1752	82	545	7783
2017	4885	739	13	206	1926	83	580	8432
Ave. Growth (2013-2017)	4.8%	7.7%	-10.5%	-0.1%	3.4%	-7.1%	1.8%	4.2%

2.2 Transmission and Distribution Losses

In PESCO's system, losses are divided into two types;

- Transmission Losses
- Distribution Losses

The losses of 132 kV transmission lines are considered as Transmission Losses whereas the losses of 11 kV and 440 Volts lines supplying the consumers are called Distribution Losses. In a system, generally the high losses are due to lack of proper maintenance and element of theft. Reduction in losses can be achieved through installation of properly sized conductors in 11kV feeders and low tension lines. Installation of capacitor banks to reduce reactive power and thereby improving power factor is also and effective method to reduce line losses. The breakup of energy sent out is shown as Sale, Distribution Losses and Transmission Losses with their percentages in **Figure 1-3** for the year 2014-15, 2015-16 and 2016-17.

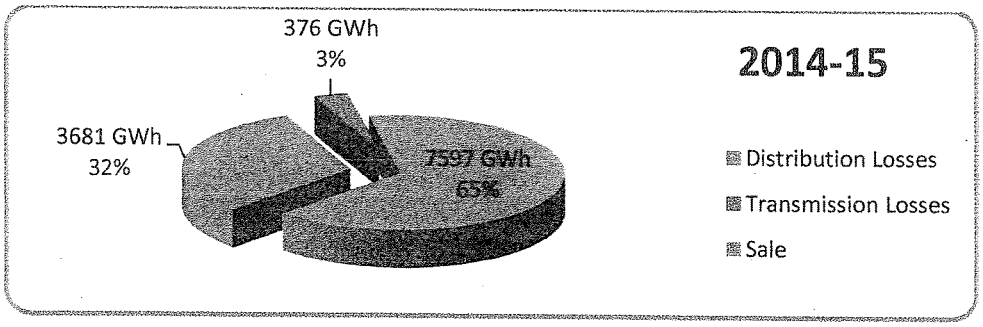

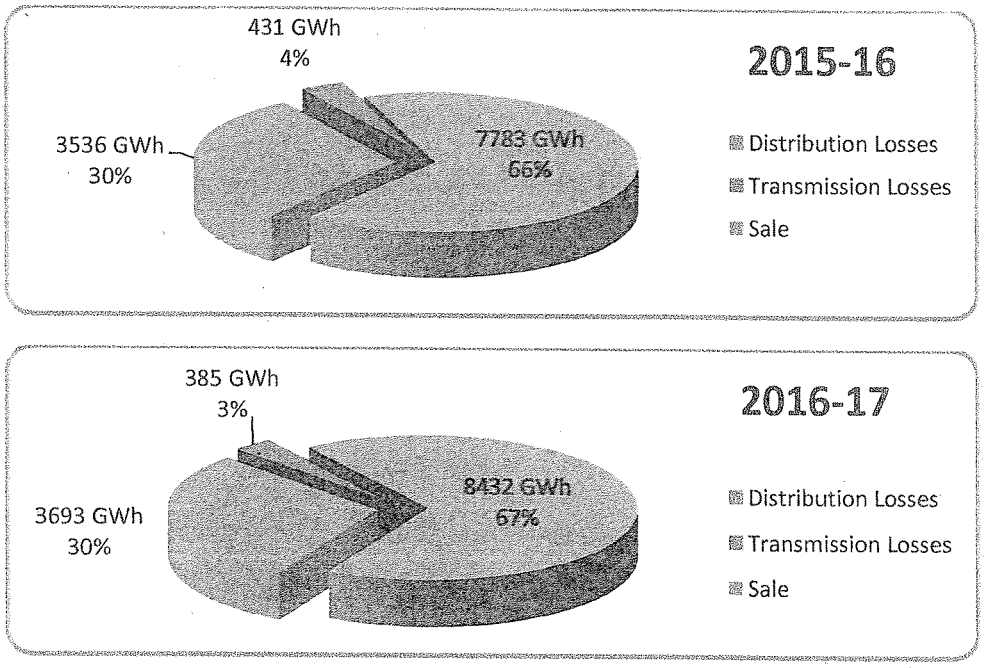

Figure 1-3: Historical Energy Sale and Losses (Transmission and Distribution) with their percentages

2.3 Recorded and Computed Peak Demand

Recorded peak demand is the highest electricity demand or maximum power supplied to the consumers during the base year. Computed peak demand is calculated from the recorded peak demand by adding the element of unserved power to the values of recorded peak demand. **Figure 1-4** shows the recorded and computed peak demands (MW) from the year 2012-13 to 2016-17.

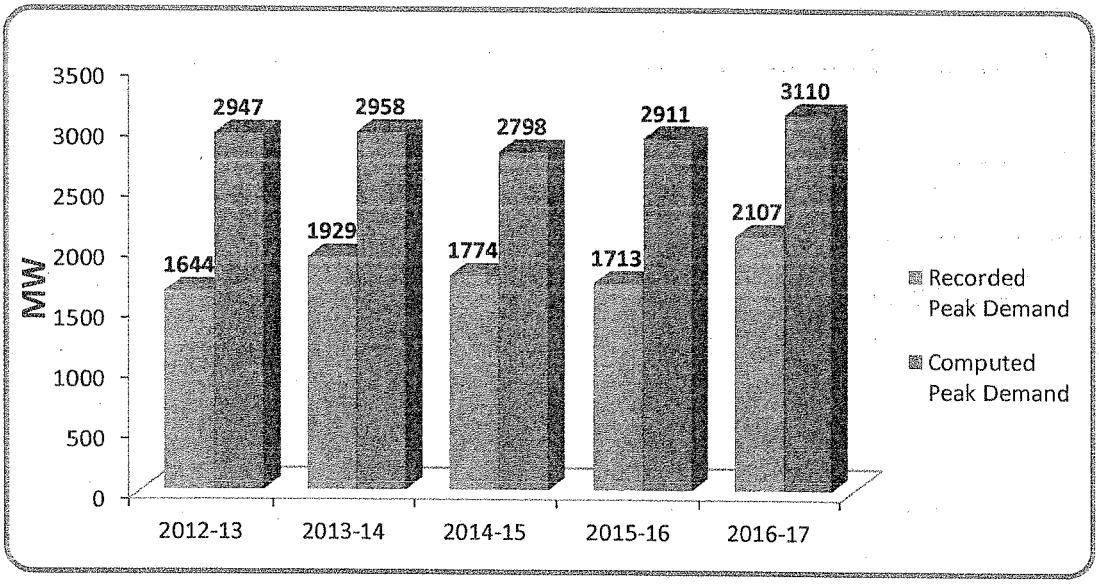

Figure 1-4: Historical Recorded and Computed Peak Demands

Historical figures of recorded and computed peak, energy sale and purchase, losses and load factors for PESCO are given in the following table.

Table 2.3-1: Historical Peak Demand, Energy Sale & Purchase, Losses and Load Factor

Year[1]	Recorded Peak	Computed Peak	Energy Sale	Energy Purchase	Losses		Load Factor[2]
					11 KV	132 KV	
	MW	MW	GWh	GWh	GWh	GWh	%
2013	1644	2947	7162	10892	3338	392	76
2014	1929	2958	7471	11378	3450	457	67
2015	1774	2798	7597	11654	3681	376	75
2016	1713	2911	7783	11750	3536	431	78
2017	2107	3110	8432	12511	3693	385	65.7
Growth Rate		1.35%	4.17%	3.53%			

2.4 Number of Consumers

Historical figures of number of consumers within PESCO's jurisdiction for the last five years are given in **Figure 1-5**. These figures show the total number of consumers in all consumer categories; i.e. Domestic, Commercial, Small industries, Medium & Large industries, Public Lighting, Bulk and Agriculture. **Figure 1-5** shows a regular increase in the number of customers each year.

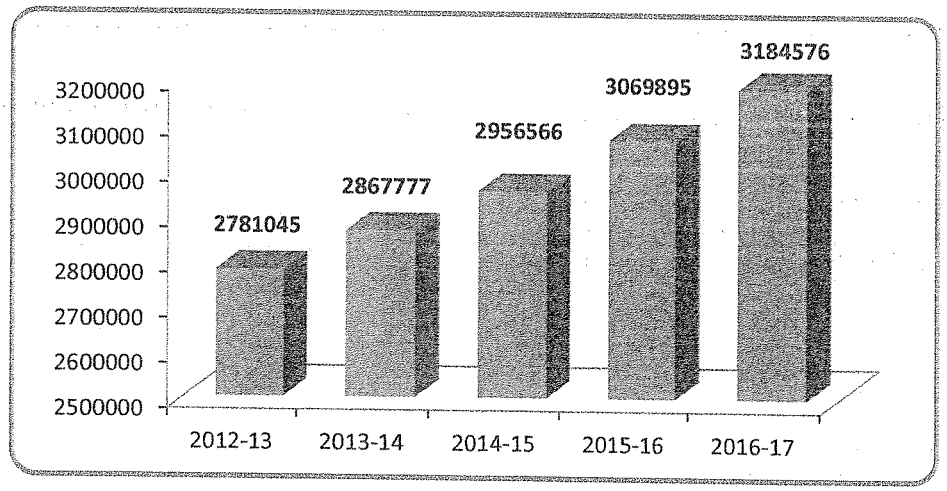

Figure 1-5: Number of Consumers

[1] Financial Year

[2] Recorded Load Factor

Category-wise number of consumers for the last five years i.e. 2012-13 to 2016-17 is shown in the following table.

Table 2.4-1: Historical Number of Consumers in PESCO

Year	Domestic	Commercial	Public Light	Small Industries	M&L Industries	Tube Well	Bulk	Total
2013	2447483	279479	1013	24194	4771	23228	877	2781045
2014	2523515	289155	1028	24442	5318	23441	878	2867777
2015	2602227	298739	1040	24623	5721	23328	888	2956566
2016	2703453	309919	1057	25003	6201	23371	891	3069895
2017	2805470	321802	1088	25410	6613	23289	904	3184576
Ave. Growth (2013-2017)	3.5%	3.6%	1.8%	1.2%	8.5%	0.1%	0.8%	3.4%

3 Power Market Survey Methodology

3.1 Overview

The Power Market Survey Model forms the basis of the Medium Term Forecast. It produces energy and peak demand forecast for each consumer category and grid station for the entire service area over a period of ten years. The model has three inter-related components: the main database, the basic input parameters and the calculations.

A huge energy consumption database has been developed through the Power Market Survey. The database contains base year consumption data for existing consumers and ten years' forecast data for new consumers for each consumer category within the company. In addition, there is separate information for peak demand in medium & large industries and traction categories. Because of its huge volume, this data is not listed as part of the report.

In addition to the database, a number of basic input parameters are separately prepared for each DISCO which forms an integral part of the forecast model. These include:

- **Growth Rates:** The annual increase in consumption per consumer by consumer category
- **Loss Rates:** Transmission and Distribution Losses expressed as a percentage of energy purchased and energy sold, respectively
- **Load Factors:** It expresses the ratio of the amount of energy actually generated to the amount that would have been generated, had the peak demand been continued over the entire period.
- **Coincidence Factors:** Describing the load diversity within the system.

The forecast calculations within the model combine the energy consumption data and the input parameters to compute the energy and peak demand requirements within each area for each year to be forecasted. The basic data unit is an area. The data is accumulated from the area basis to grid stations, then to DISCOs and ultimately combined to produce a forecast for the entire system.

A detailed discussion of each of the three model components is given below.

3.2 Survey Base Data

An extensive database has been developed on gross consumption by consumer category such as household (domestic), commercial, small industrial, large industrial, tube wells (agriculture), public lighting, and traction (electric rail). Energy consumption figures come from consumer service meter readings. Maximum demand readings and load factors for large industrial consumers and other demand-metered consumers are based on service meter readings. The consumption data is collected from Computer Centers of each DISCO (It is category-wise consumption data of each feeder). The database also contains data regarding un-served demands attributed to load shedding.

The basic geographic unit represented within the database is called an area, although many areas are divided into two or more subareas. This occurs when portions of the area are served by different feeders or where a single feeder services different administrative districts. Each area is assigned a series of codes which identify the technical boundaries associated with the area.

The technical boundaries, which are emphasized in this report, start at the grid station. Thus, all areas and subareas are assigned to one of the sub-stations in each DISCO. These are distribution grid stations supplying power at 11 kV after transformation from a 132kV or 66 kV source. Grid stations are combined to form a DISCO.

There can be up to eleven records in the data base for each area or subarea, one record for each year of forecast. The first year is typically year zero and records the base year level of consumption for each consumer category. The remaining records for the area list the incremental consumption associated with new consumers to be added to the area within the specified year.

This incremental consumption is based on applications for new or extended service which are filed at each revenue office and from discussions with the relevant industries and government agencies. Incremental industrial consumption is based on a combination of interviews, trend projections, and reviews of applications for new and/or increased service. Interviews are held with major industrial consumers to identify their current capacity utilization and any long-term plans they have for future expansion or changes in their electricity consumption. In addition, the various branches of the Ministry of Industries are interviewed to determine the number of applications received for new developments or plant expansions and the anticipated electrical load associated with each development or expansion. These anticipated new demands are added to the basic forecast of industrial consumption.

Extension of electricity to new areas over the forecast period is dealt with separately. The number of new communities to be electrified is also obtained. Initial loads and load growths are calculated based on past experience in terms of market penetration and consumption per consumer in newly electrified communities. This analysis is conducted at DISCO level.

There are over 10,000 area/subarea/year records in the data base.

3.3 Input Parameters

A number of input parameters are defined in order to use these in the Power Market Survey model. These parameters are:

- Transmission and Distribution Loss Rates
- The Growth Rates in consumption per consumer for each category
- Load Factors for each consumer category
- Coincidence or Diversity Factors
- Load Shedding or Unserved Energy

The definition and basic derivation of each parameter is discussed below.

3.3.1 Growth Rates

The forecast calculations, as will be discussed below, use per consumer growth rates to update the previous year's consumption before adding the incremental consumption estimate for the current year. The Power Market Survey model requires per consumer growth rates to be specified by DISCO for each consumer category (domestic, commercial, etc.). The rates selected for the forecast are based on average annual compound growth rates, calculated from the last five years data of each consumer category in each DISCO.

3.3.2 Losses

For every 100 units of electricity purchased from a power station only 75 to 85 units are actually sold to the ultimate end-user. The remaining units are consumed by the power system itself during transmission and distribution of the sold energy. The transmission and distribution losses must be added to the sales forecast in order to determine the total generation requirement for the system. An additional source of "loss" is the consumption in auxiliaries (also called station service) used by the power plants in the process of generating electricity. Auxiliary consumption cannot be avoided and is totally dependent on the type of generation. For example, a thermal plant would have a higher auxiliary consumption than a hydro plant to account for the energy consumed by fuel and waste handling systems. Auxiliary losses are determined and incorporated in the forecast outside the model. However, presently as the power is purchased at the bus bar level so the energy consumption in auxiliary is not calculated.

The Power Market Survey model handles Distribution and Transmission losses in such a manner that Distribution losses are expressed as a percentage of Sales and Transmission losses are expressed as a percentage of the energy purchased from the generating stations. The model is capable of handling different loss rates of each year for each DISCO. The Distribution and Transmission losses used in the Power Market Survey Model are based on the review of current loss rates and an evaluation of existing loss reduction initiatives within the Distribution Network of the DISCO. The proposed losses (Distribution losses at 11kV and Transmission losses at 132 kV) are applied DISCO-wise. Previously a separate excel sheet was used outside the model to calculate the loss rates needed for the model. Now a separate module has been incorporated in the model to adjust 132 kV and 11 kV received and sale of a DISCO. This model simulates sale, Distribution losses and Transmission losses of a DISCO. It also includes the loss reduction program.

3.3.3 Load Factors

Energy sale in each consumer category is converted to peak power demand through the use of a load factor. It expresses the ratio of the amount of energy actually generated to the amount that would have been generated, had the peak demand been continued over the entire period. Load factors can be calculated over any time period but the most common are daily, weekly and annual.

The load factors utilized in the Power Market Survey Model relate annual energy sales to peak capacity for each consumer category (domestic, commercial, public lighting, small industries and private tube wells). Input load factors are not required for medium/large industry, public tube well and traction sales as consumption for these sectors is provided through the survey in both energy and power terms.

Maximum demand readings are available directly for large industrial and other demand metered consumers such as public tube wells. Load factors for non-demand metered consumers are determined on a sample basis. For example, peak demand is based on maximum demand readings from substation feeders which are identified as serving predominantly one sector.

Domestic and commercial load factors are differentiated by community size (village, town or city). Whereas a single load factor is used for small industrial, private tube wells, public lighting and traction because of the similar nature in the operation of these loads.

ANNEX-3

List of Ongoing/Planned Generation Projects

S. #	Year	Name of Project	Agency	Fuel	Installed Capacity (MW)	Comissioning Date	Status/Remarks
		Existing Installed Capacity 28,483 MW					
		Existing Derated Capacity 23,954MW					
1		M/s Layyah Sugar Mills Ltd.	AEDB	Baggase	41	Aug. 2017	Ongoing
2		Almoiz Industries Limited	AEDB	Baggase	36	Aug. 2017	Ongoing
3		Ranolia HPP	PEDO	Hydro	17	Aug. 2017	Ongoing
4		LNG Based Plants at Balloki (GT No.2)	PPDB	Imp. LNG	400	Sep. 2017	Ongoing
5		Machai Canal HPP	PEDO	Hydro	3	Sep. 2017	Ongoing
6		Harrapa Solar Pvt. Ltd.	AEDB	Solar	18	Oct. 2017	Ongoing
7		Port Qasim Power Project (Unit-I)	PPIB	Imp. Coal	660	Nov. 2017	Ongoing
8		Daral Khwar HPP	PEDO	Hydro	37	Dec. 2017	Ongoing
9		Golen Gol HPP Unit-I	WAPDA	Hydro	35	Dec. 2017	Ongoing
10		LNG Based Plants at Bhikki (1*ST)	PPIB	Imp. LNG	400	Dec. 2017	Ongoing
11		AJ Power Pvt. Lt.d	AEDB	Solar	12	Dec. 2017	Ongoing
12		LNG Based Plants at Balloki (1*ST)	PPDB	Imp. LNG	423	Jan. 2018	Ongoing
13		LNG Based Plants at Haveli Bahadur Shah (1*ST)	PPDB	Imp. LNG	430	Jan. 2018	Ongoing
14		Tarbela 4th Ext. Unit-I	WAPDA	Hydro	470	Feb. 2018	Ongoing
15	2017-18	M/s Jhmapir Wind Power Ltd.	AEDB	Wind	49.6	Feb. 2018	Ongoing
16		M/s Hawa Energy Pvt. Ltd.	AEDB	Wind	50	Feb. 2018	Ongoing
17		Neelum Jhelum Hydro Unit-I	WAPDA	Hydro	242	Feb. 2018	Ongoing
18		Neelum Jhelum Hydro Unit-II	WAPDA	Hydro	242	Mar. 2018	Ongoing
19		Jabori HPP	PEDO	Hydro	10	Mar. 2018	Ongoing
20		Karora HPP	PEDO	Hydro	12	Apr. 2018	Ongoing
19		Golen Gol HPP Unit-II	WAPDA	Hydro	35	Apr. 2018	Ongoing
20		Tarbela 4th Ext. Unit-II	WAPDA	Hydro	470	Apr. 2018	Ongoing
21		Neelum Jhelum Hydro Unit-III	WAPDA	Hydro	242	Apr. 2018	Ongoing
22		Neelum Jhelum Hydro Unit-IV	WAPDA	Hydro	242	Apr. 2018	Ongoing
23		Tarbela 4th Ext. Unit-III	WAPDA	Hydro	470	May. 2018	Ongoing
24		Golen Gol HPP Unit-III	WAPDA	Hydro	35	May. 2018	Ongoing
25		Port Qasim Power Project (Unit-II)	PPIB	Imp. Coal	660	May. 2018	Ongoing
26		M/s Hartford Alternative Energy (Pvt.) Limited	AEDB	Wind	49.3	Jun. 2018	Ongoing
		TOTAL ADDITION ENDING 2017-18			5790.3		

7		M/s Three Gorges Second Wind Farm Pvt. Ltd.	AEDB	Wind	49.5	Sep. 2018	Ongoing
8		M/s Three Gorges Third Wind Farm Pvt. Ltd.	AEDB	Wind	49.5	Sep. 2018	Ongoing
9		Engro Powergen Project (Unit-I)	PPIB	Dom. Coal	330	Oct. 2018	Ongoing
0		RLNG based power plant at Trimun, Jhang (GT NO.1 & 2)	PPDB	Imp. LNG	800	Nov. 2018	Planned
1		M/s Tricon Boston (Pvt.) Limited (A)	AEDB	Wind	50	Nov. 2018	Planned
2		M/s Tricon Boston (Pvt.) Limited (B)	AEDB	Wind	50	Nov. 2018	Planned
3		M/s Tricon Boston (Pvt.) Limited (C)	AEDB	Wind	50	Nov. 2018	Planned
4		M/s Zephyr Power Pvt. Ltd.	AEDB	Wind	50	Nov. 2018	Planned
35		HUB Power Company Ltd. (Unit-I)	PPIB	Imp. Coal	660	Dec. 2018	Ongoing
36		Chanar Energy Limited	AEDB	Baggase	22	Dec. 2018	Ongoing
37		Shahtaj Sugar Mills Ltd.	AEDB	Baggase	32	Jan. 2019	Ongoing
38		Hunza Power (Pvt.) Ltd.	AEDB	Baggase	49.8	Feb. 2019	Planned
39		Etihad Power Generation Limited.	AEDB	Baggase	74.4	Feb. 2019	Ongoing
40		Indus Energy Limited.	AEDB	Baggase	31	Apr. 2019	Planned
41		Bahawalpur Energy Ltd.	AEDB	Baggase	31.2	Apr. 2019	Planned
42	2018-19	Kashmir Power Private Ltd	AEDB	Baggase	40	Apr. 2019	Planned
43		Hamza Sugar Mills Ltd.	AEDB	Baggase	30	May.2019	Planned
44		RYK Energy Limited.	AEDB	Baggase	25	May. 2019	Planned
45		Two Star Industries Pvt Ltd.	AEDB	Baggase	48.9	May. 2019	Planned
46		Faran Power Ltd.	AEDB	Baggase	26.5	May. 2019	Planned
47		Ittefaq Power (Pvt.) Ltd.	AEDB	Baggase	31.2	May. 2019	Planned
48		Mirpurkhas Energy Ltd.	AEDB	Baggase	26	May. 2019	Planned
49		Alliance Sugar Mills Ltd.	AEDB	Baggase	30	May.2019	Planned
50		Sheikhoo Power Ltd.	AEDB	Baggase	30	May.2019	Planned
51		Engro Powergen Project at Thar (Unit-II)	PPIB	Dom. Coal	330	Jun. 2019	Ongoing
52		Koto HPP	PEDO	Hydro	41	Jun. 2019	Ongoing
53		Matiltan HPP	PEDO	Hydro	84	Jun. 2019	Ongoing
54		Safina Sugar Mills Ltd.	AEDB	Baggase	20	Jun. 2019	Ongoing
55		Alman Seyyam (Pvt.) Ltd.	AEDB	Baggase	34.5	Jun. 2019	Planned
56		Solar Power Projects (QA Solar)	PPDB	Solar	600	Jun. 2019	Planned
		TOTAL ADDITION ENDING 2018-19			**3,726**		
57		HUB Power Company Ltd. (Unit-II)	PPIB	Imp. Coal	660	Aug. 2019	Ongoing

58		Grange Holding	PPIB	Imp. Coal	163	Sep. 2019	Planned
59		Gulpur Poonch river	PPIB	Hydro	102	Oct. 2019	Ongoing
60		RLNG based power plant at Trimun, Jhang (ST NO.1)	PPDB	Imp. LNG	430	Nov. 2019	Planned
61	2019-20	Mehran Energy Ltd.	AEDB	Baggase	26.5	Dec. 2019	Planned
62		Habib Sugar Mills Ltd.	AEDB	Baggase	27	Dec. 2019	Planned
63		Sadiqabad Power Pvt Ltd.	AEDB	Baggase	45	Dec. 2019	Planned
64		Gotki Power Pvt Ltd.	AEDB	Baggase	45	Dec. 2019	Planned
65		Solar Power Projects (Competitive Bidding)	AEDB	Solar	600	Mar. 2020	Planned
TOTAL ADDITION ENDING 2019-20					**2,699**		
66		Keyal Khwar	WAPDA	Hydro	128	Aug. 2020	Ongoing
67		Karachi Coastal (Unit-I)	PAEC	Nuclear	1,100	Nov. 2020	Ongoing
68		Wind Power Projects (Competitive Bidding)	AEDB	Wind	1224	Dec. 2020	Planned
69		TPS Jamshoro (Phase-I)	GENCOs	Imp. Coal	660	Dec. 2020	Planned
70		Thar Energy Limited (HUBCO Ltd.)Thar Block-II	PPIB	Dom. Coal	330	Dec. 2020	Planned
71		Shanghai Electric Power Project	PPIB	Dom. Coal	1,320	Dec. 2020	Planned
72		Thal NOVA , Thar Block-II	PPIB	Dom. Coal	330	Dec. 2020	Planned
73		Lawi HPP	PEDO	Hydro	69	Mar. 2021	Ongoing
74		TPS Jamshoro (Phase-II)	GENCOs	Imp. Coal	660	Jun. 2021	Planned
75		Lucky Electric Power Company Ltd.	PPIB	Imp. Coal	660	Jun. 2021	Planned
76		Tarbela 5th Ext. Project	WAPDA	Hydro	1,410	Jun. 2021	Planned
TOTAL ADDITION ENDING 2020-21					**7,891**		
77		Siddiqsons Limited	PPIB	Dom. Coal	330	Sep. 2021	Planned
78		Karachi Coastal (Unit-II)	PAEC	Nuclear	1,100	Oct. 2021	Ongoing
79		Oracle Coal Power Project	PPIB	Dom. Coal	1,320	Dec. 2021	Planned
80	2021-22	Karot HPP	PPIB	Hydro	720	Dec. 2021	Planned
81		Coal Based Power Plant at Gawadar	PPIB	Imp. Coal	300	Dec. 2021	Planned
82		CASA	GoP	Import	1,000	Jun. 2022	Planned
TOTAL ADDITION ENDING 2021-22					**4,770**		
83		RYK Coal Power Plant	PPDB	Dom. Coal	1320	Jul. 2022	Planned
84		Jagran-III	AJK	Hydro	35	Jul. 2022	Planned
85		Lawat	AJK	Hydro	49	Jul. 2022	Planned
86	2022-23	Gomat Nar	AJK	Hydro	50	Jul. 2022	Planned

7		Suki Kinari HPP	PPIB	Hydro	870	Dec. 2022	Planned
8		Dasu HPP (Phase-I)	WAPDA	Hydro	2,160	Feb. 2023	Planned
		TOTAL ADDITION ENDING 2022-23			**4,484**		
9		Asrit Kedam	PPIB	Hydro	215	Dec. 2023	Planned
0		Kohala HPP	PPIB	Hydro	1,124	Jun. 2024	Planned
1	2023-24	Chakothi-Hattian	PPIB	Hydro	500	Jun. 2024	Planned
2		Sehra HPP	PPIB	Hydro	130	Jun. 2024	Planned
3		Kalam Asrit HPP	PPIB	Hydro	197	Jun. 2024	Planned
		TOTAL ADDITION ENDING 2023-24			**2,166**		
4		Shantar	AJK	Hydro	45	Jul.2024	Planned
5		Sharda-II	AJK	Hydro	21	Jul.2024	Planned
6		Changan	AJK	Hydro	9	Jul.2024	Planned
7		Doarian	AJK	Hydro	40	Jul.2024	Planned
8		Nagdar	AJK	Hydro	35	Jul.2024	Planned
9		Azad Pattan HPP	PPIB	Hydro	640	Dec. 2024	Planned
00		Madian HPP	PPIB	Hydro	157	Dec. 2024	Planned
01		Kaigah Hydropower Project	PPIB	Hydro	548	Dec. 2024	Planned
02	2024-25	Mahl Hydropower Project	PPIB	Hydro	590	Dec. 2024	Planned
03		Diamer Basha (Phase-I)	WAPDA	Hydro	3,375	Dec. 2024	Planned
04		CHASHNUPP-V	PAEC	Nuclear	1,100	Dec. 2024	Planned
05		Lower Spat Gah	WAPDA	Hydro	496	Dec. 2024	Planned
06		Rajdhani Hydropower Project	PPIB	Hydro	132	Jun. 2025	Planned
07		Athmuqam	PPIB	Hydro	350	Jun. 2025	Planned
08		Turtonas-Uzghor	PPIB	Hydro	58	Jun. 2025	Planned
09		Nekhurdum Pur	PPIB	Hydro	80	Jun. 2025	Planned
		TOTAL ADDITION ENDING 2024-25			**7,676**		
		GRAND TOTAL ENDING 2025			**38,602**		

ferences:

s per data provided by WAPDA Hydro, GENCOs, AJKPDO, PEDO, PPIB, AEDB, PPDB, TCEB and PAEC.

Following plants i.e. Coal Based Power Plant (Tentative), Small Hydro and REDSIP have not been considered due to no ground realities.

10% Renewable(Wind & Solar) Power Plants are expected to be added in every year after 2021-22 as per Grid Code, but not included in the analysis.

Commissioning dates modified

* Pre-Requisites completed for issuance of PAR

** At initial stage

ANNEX-4

PESCO LOAD FLOW STUDY FOR (DIIP) FIVE YEAR PLAN
YEAR 2018: BASE CASE

Exhibit-1-2018-1.1

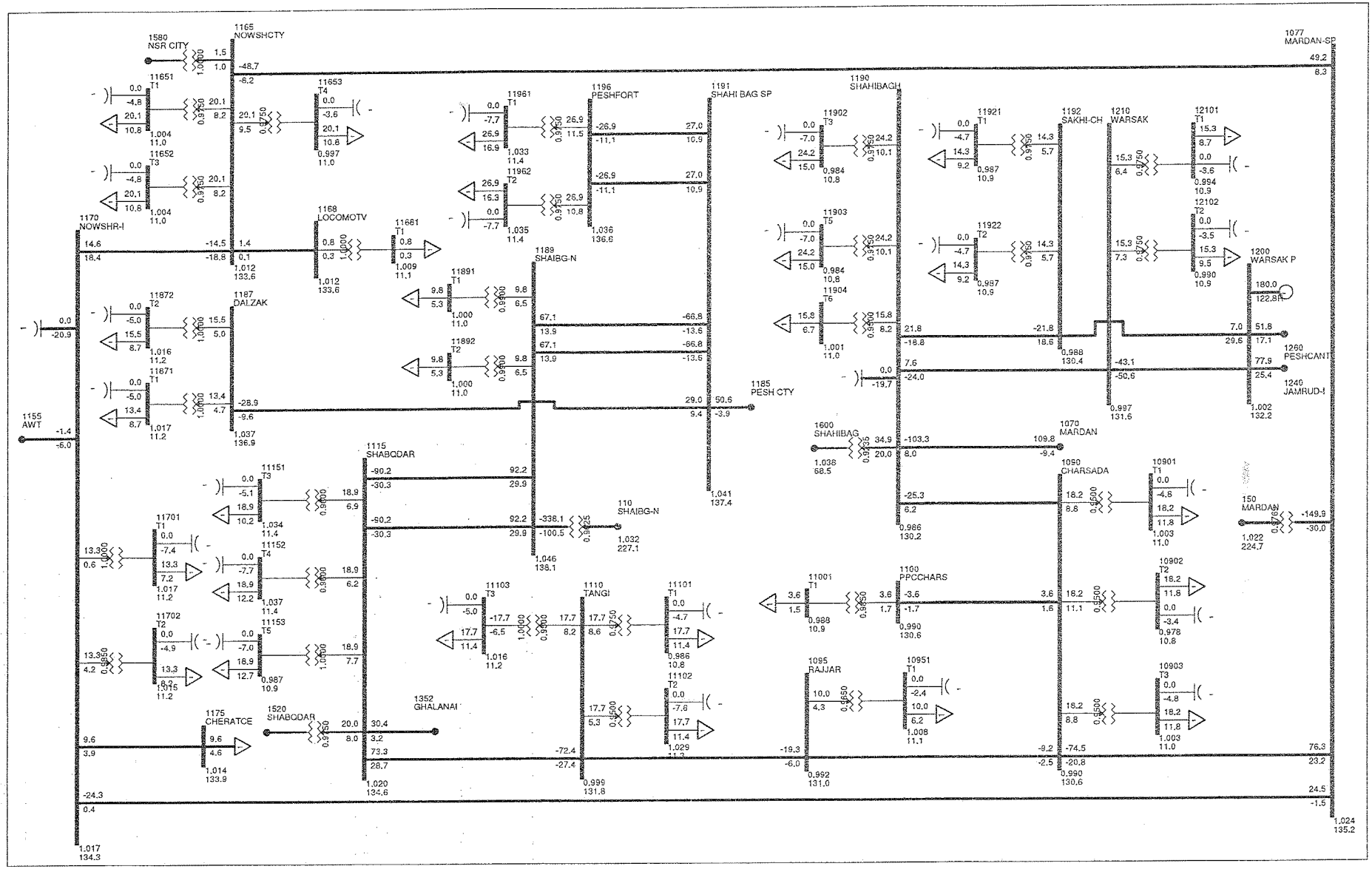

PESCO LOAD FLOW STUDY FOR (DIIP) FIVE YEAR PLAN
YEAR 2018: BASE CASE

Exhibit-1-2018-1.2

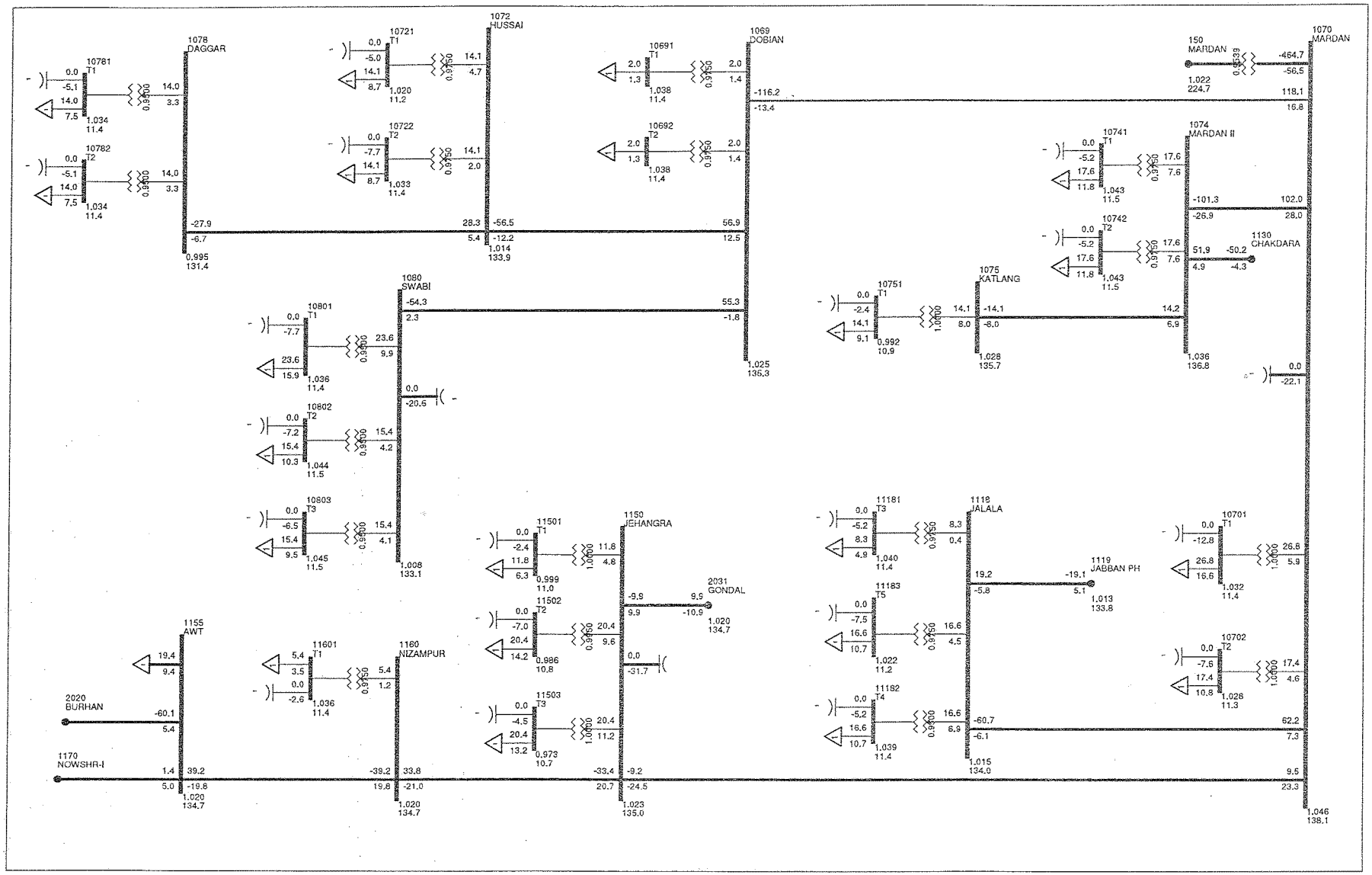

PESCO LOAD FLOW STUDY FOR (DIIP) FIVE YEAR PLAN
YEAR 2018: BASE CASE

Exhibit-1-2018-1.3

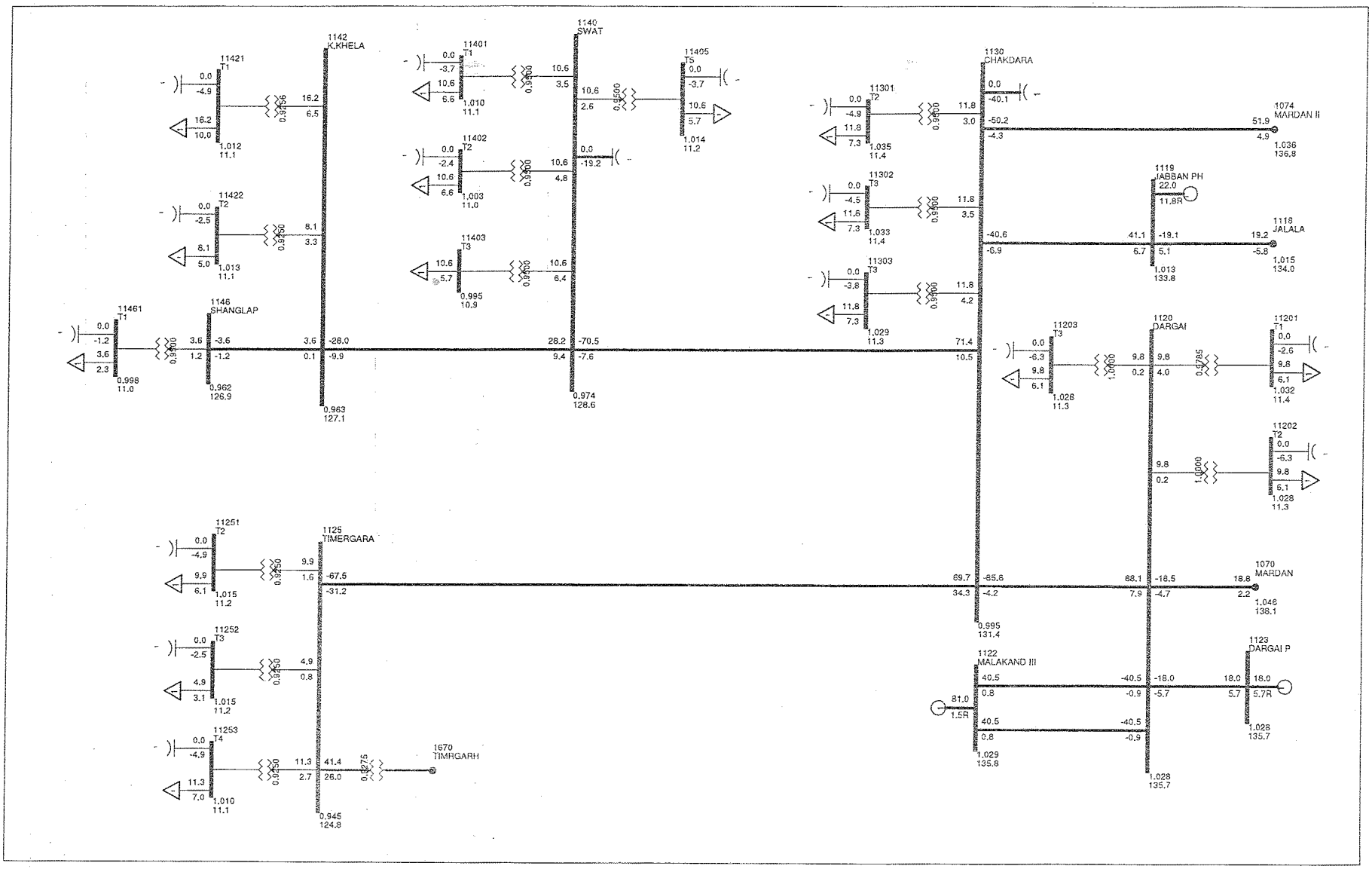

PESCO LOAD FLOW STUDY FOR (DIIP) FIVE YEAR PLAN
YEAR 2018: BASE CASE

Exhibit-1-2018-1.4

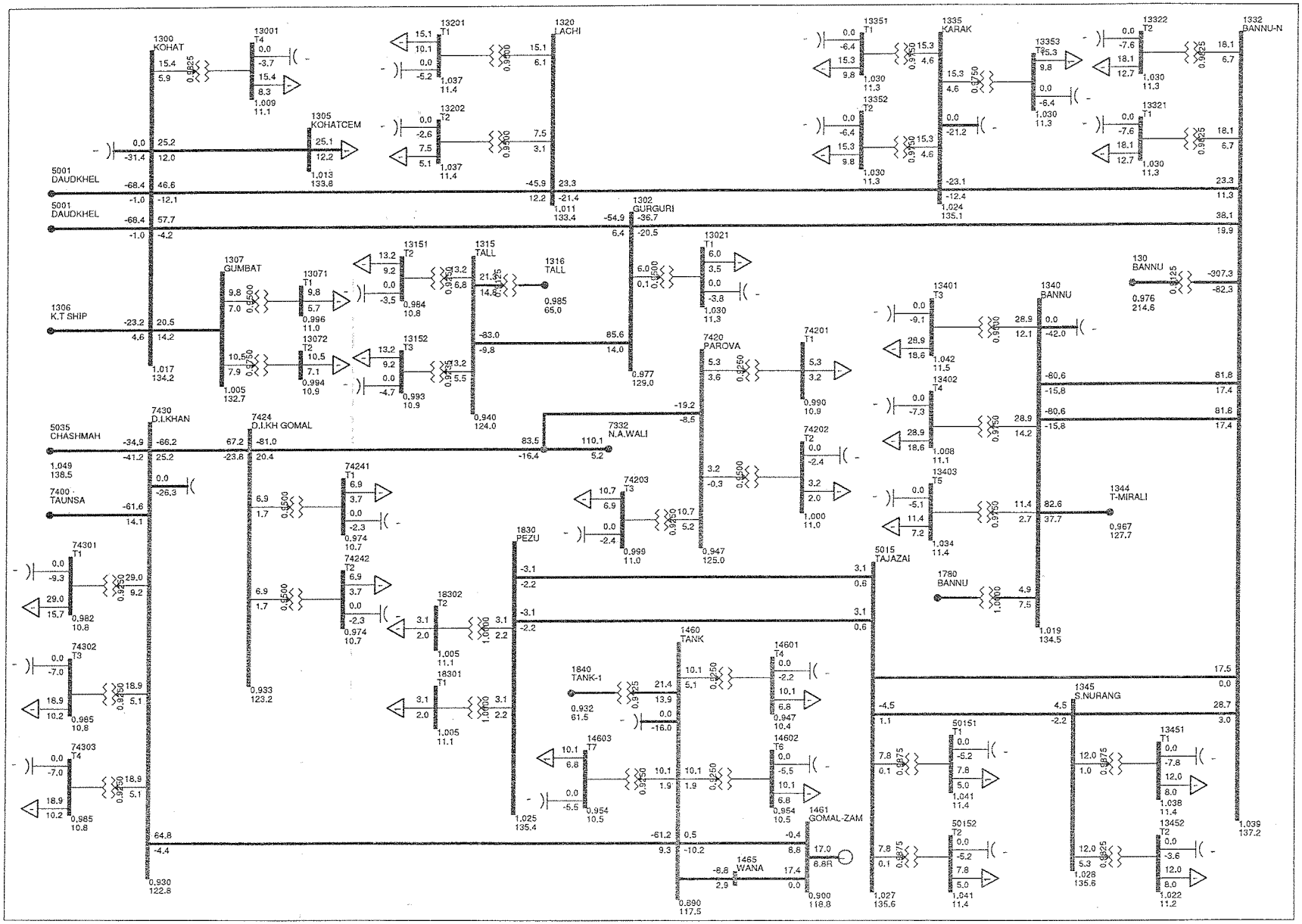

PESCO LOAD FLOW STUDY FOR (DIIP) FIVE YEAR PLAN
YEAR 2018: BASE CASE

Exhibit-1-2018-1.5

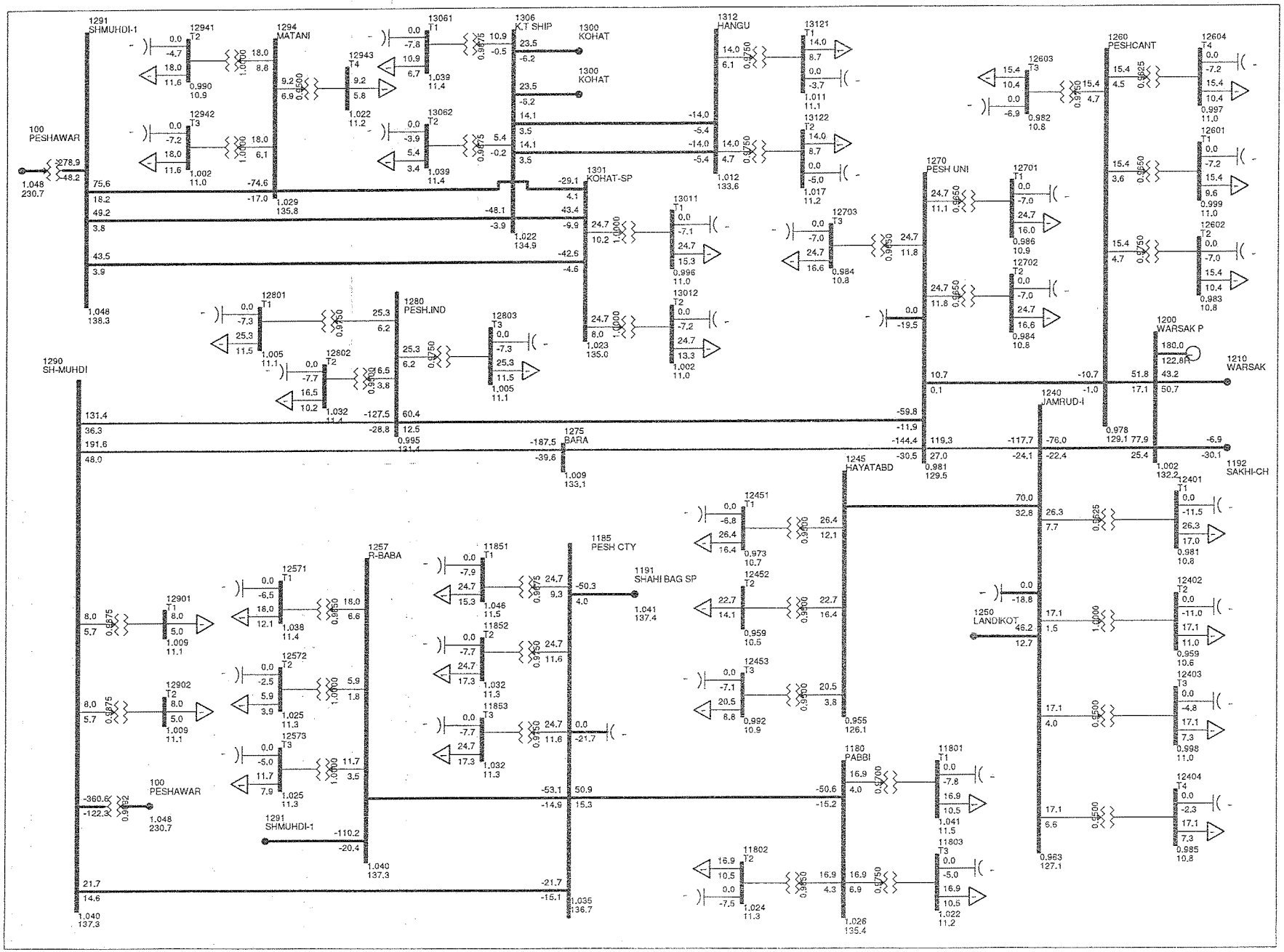

PESCO LOAD FLOW STUDY FOR (DIIP) FIVE YEAR PLAN
YEAR 2018: BASE CASE

Exhibit-1-2018-1.6

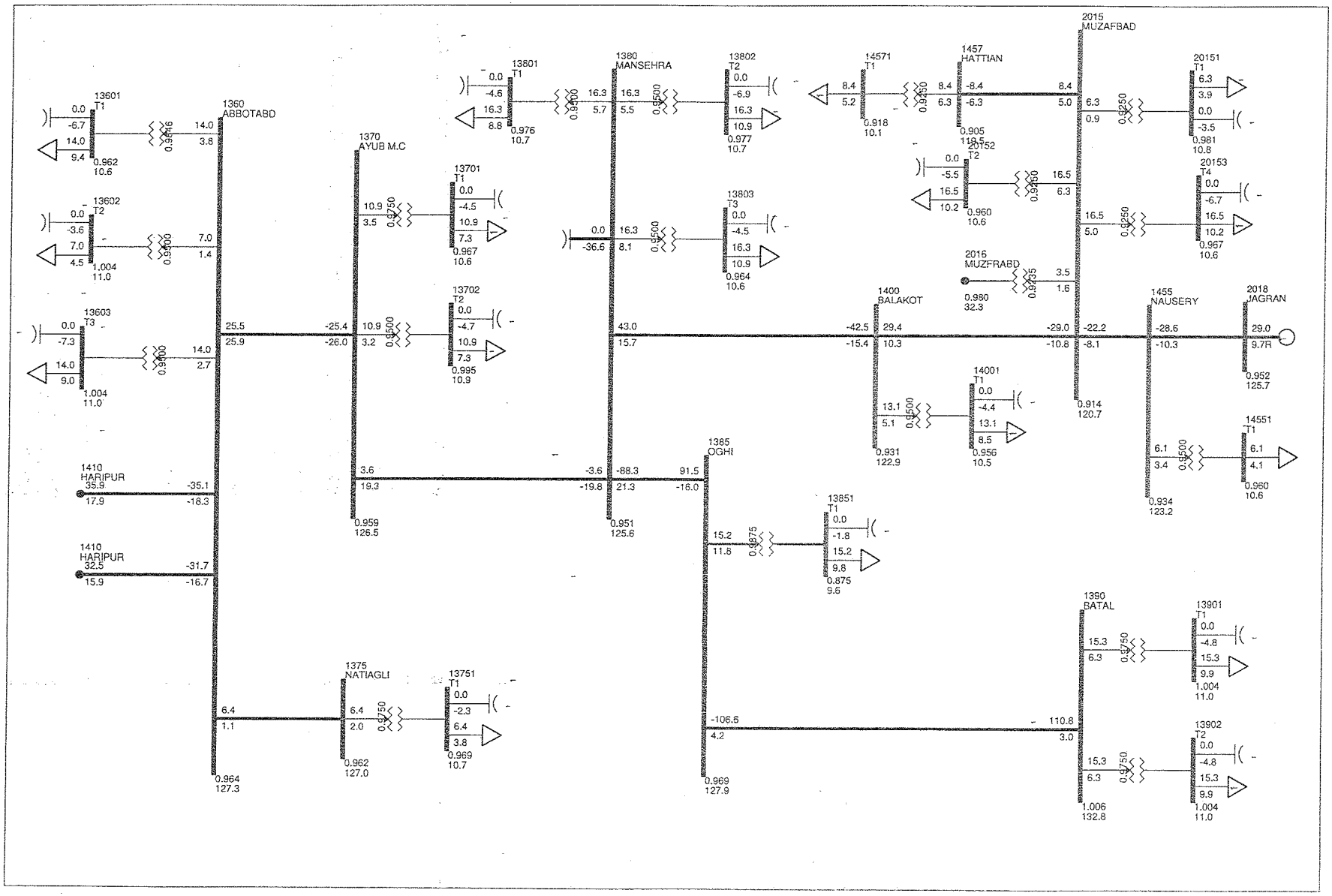

PESCO LOAD FLOW STUDY FOR (DIIP) FIVE YEAR PLAN
YEAR 2018: BASE CASE

Exhibit-1-2018-1.7

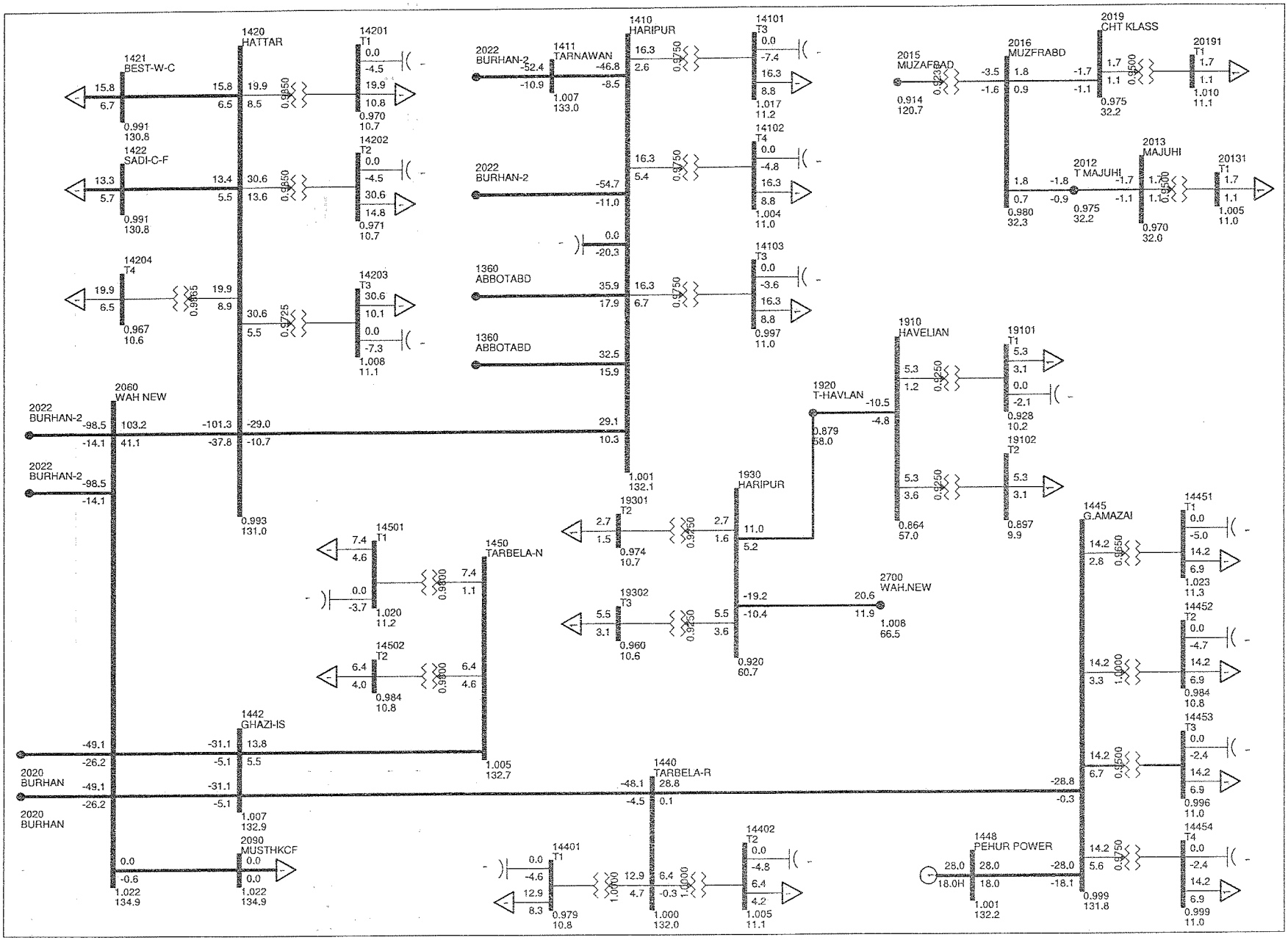

PESCO LOAD FLOW STUDY FOR (DIIP) FIVE YEAR PLAN
YEAR 2018: BASE CASE

Exhibit-1-2018-1.8

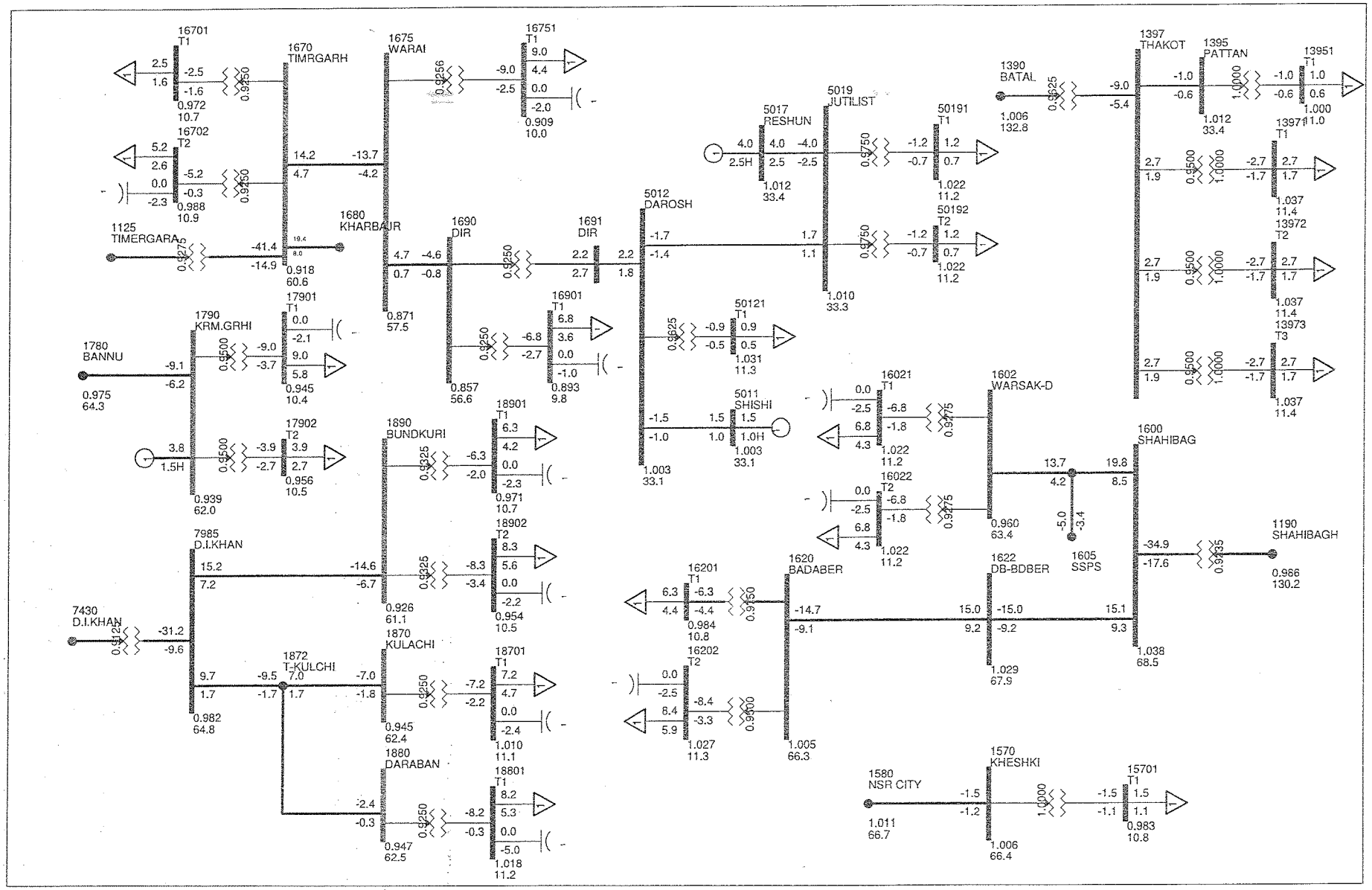

PESCO LOAD FLOW STUDY FOR (DIIP) FIVE YEAR PLAN
YEAR 2018: BASE CASE WITH REINFORCEMENT

Exhibit-1-2018-2.1

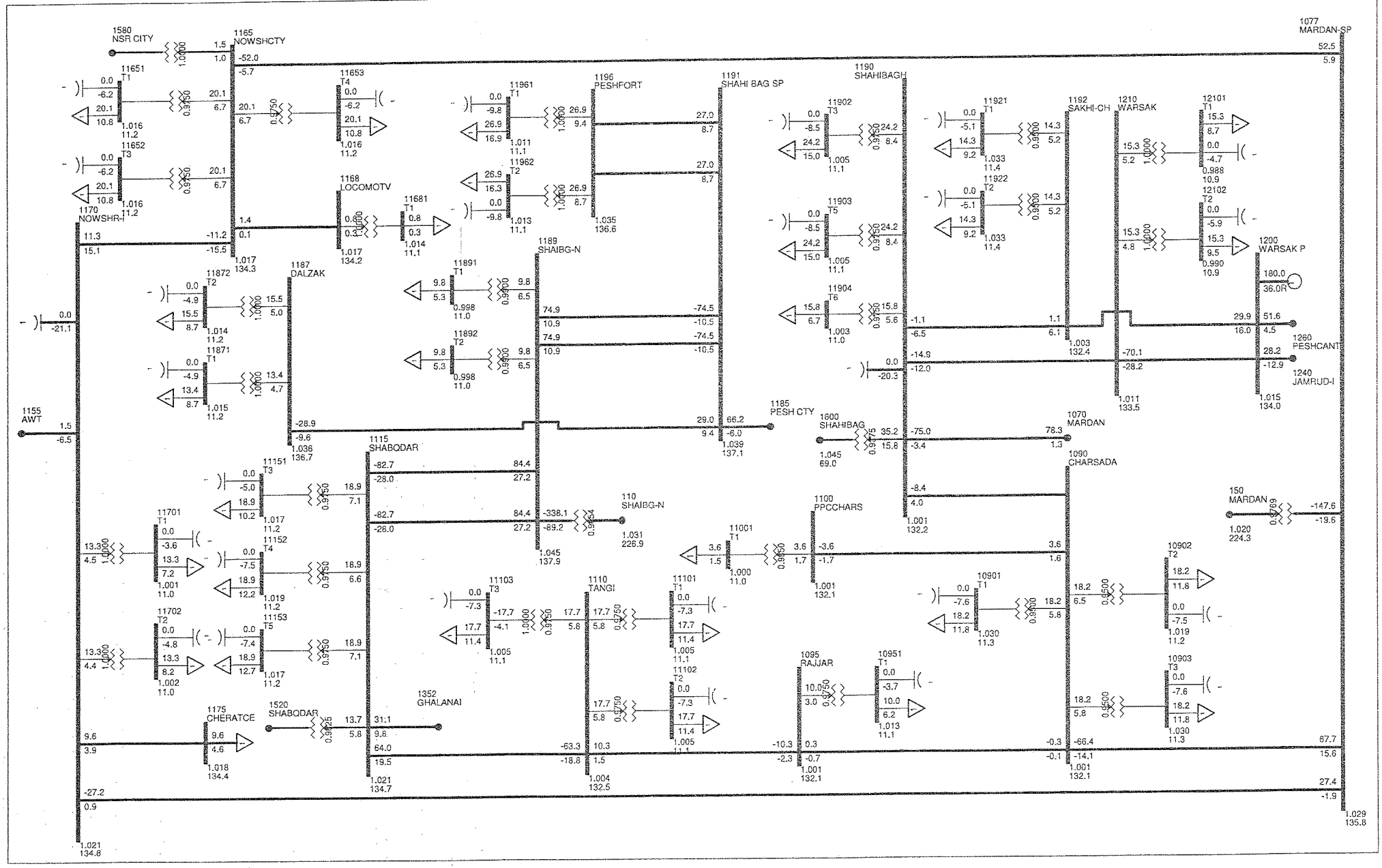

PESCO LOAD FLOW STUDY FOR (DIIP) FIVE YEAR PLAN
YEAR 2018: BASE CASE WITH REINFORCEMENT

Exhibit-1-2018-2.2

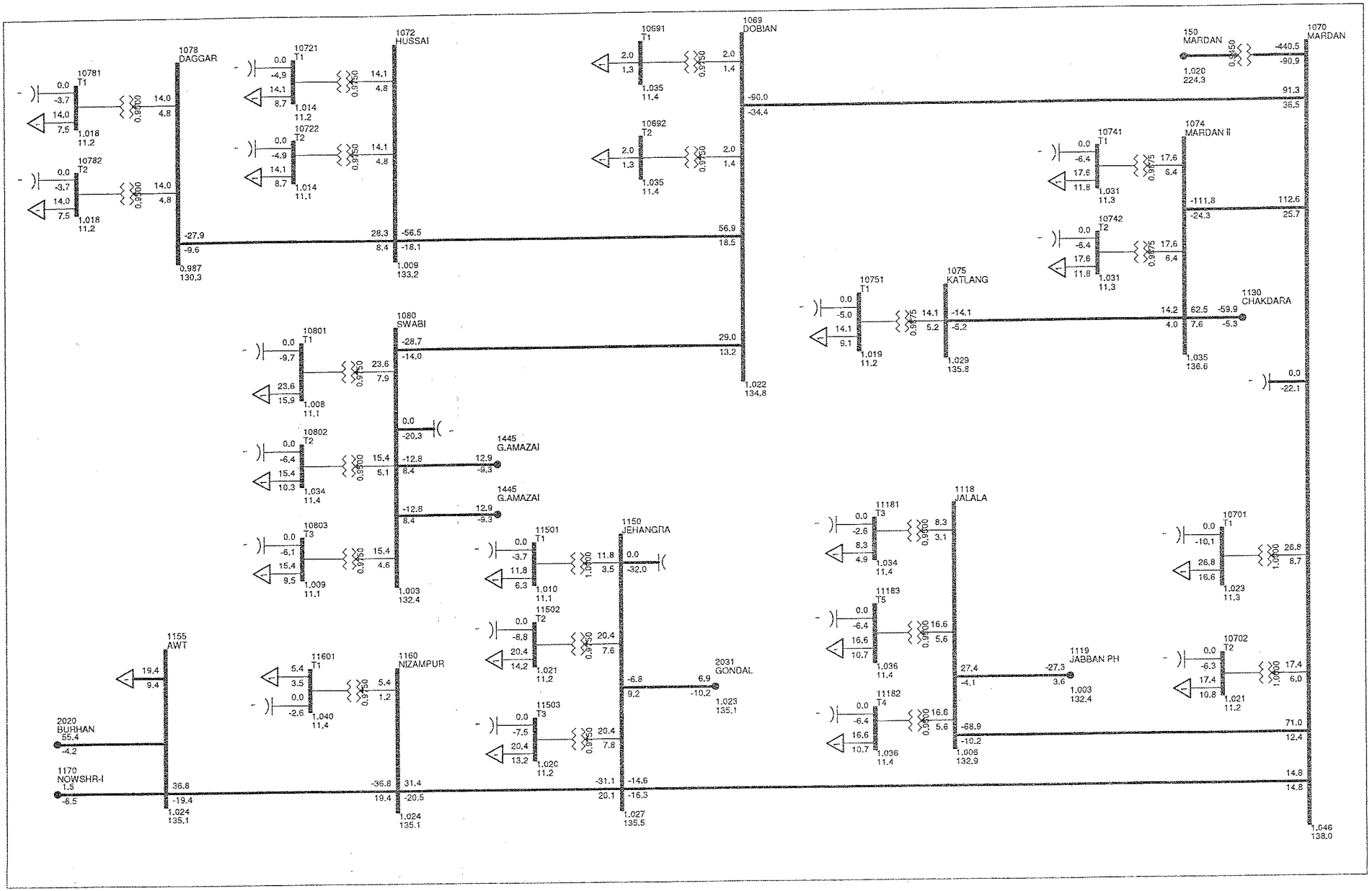

PESCO LOAD FLOW STUDY FOR (DIIP) FIVE YEAR PLAN
YEAR 2018: BASE CASE WITH REINFORCEMENT

Exhibit-1-2018-2.3

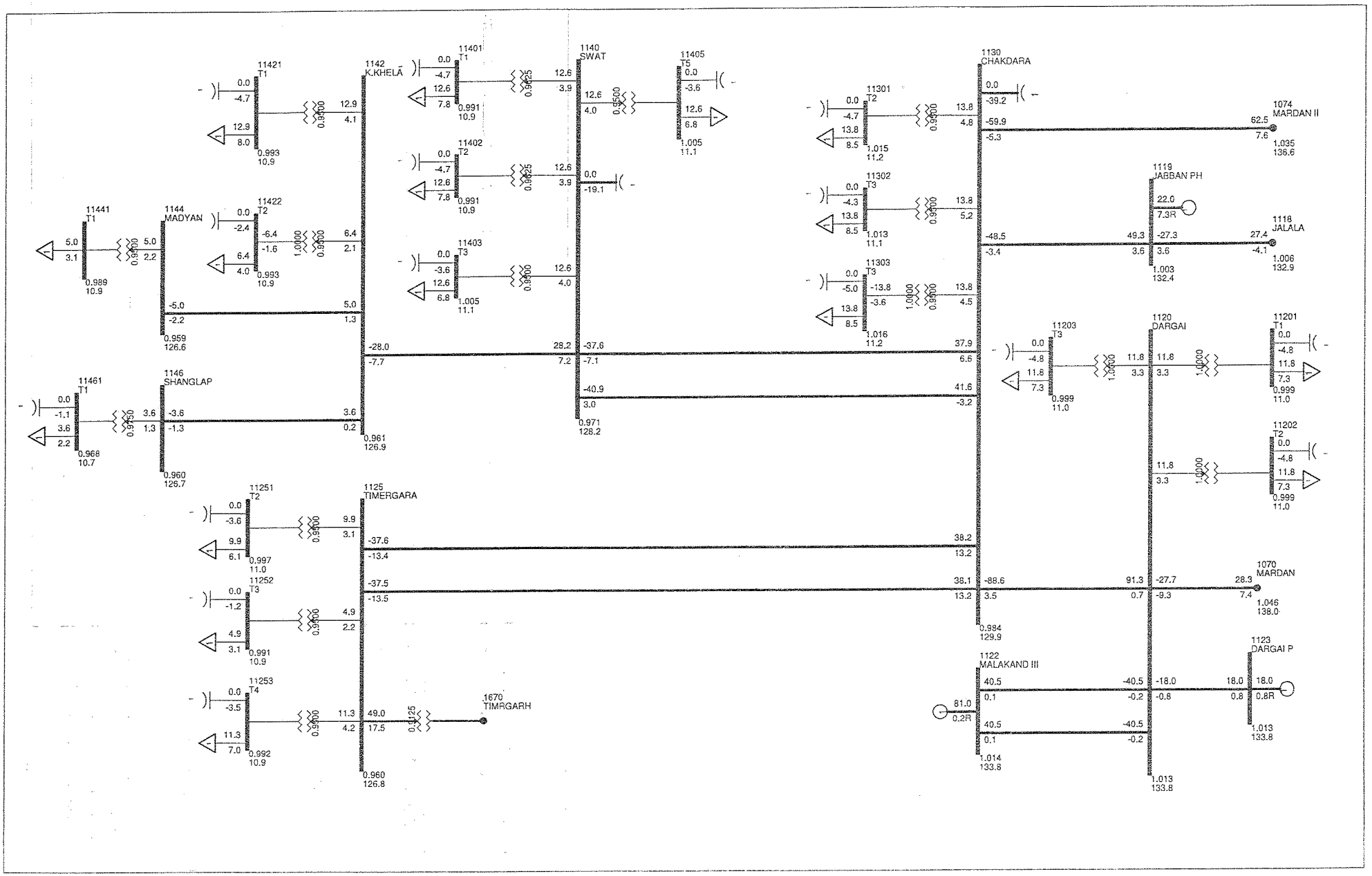

PESCO LOAD FLOW STUDY FOR (DIIP) FIVE YEAR PLAN
YEAR 2018: BASE CASE WITH REINFORCEMENT

Exhibit-1-2018-2.4

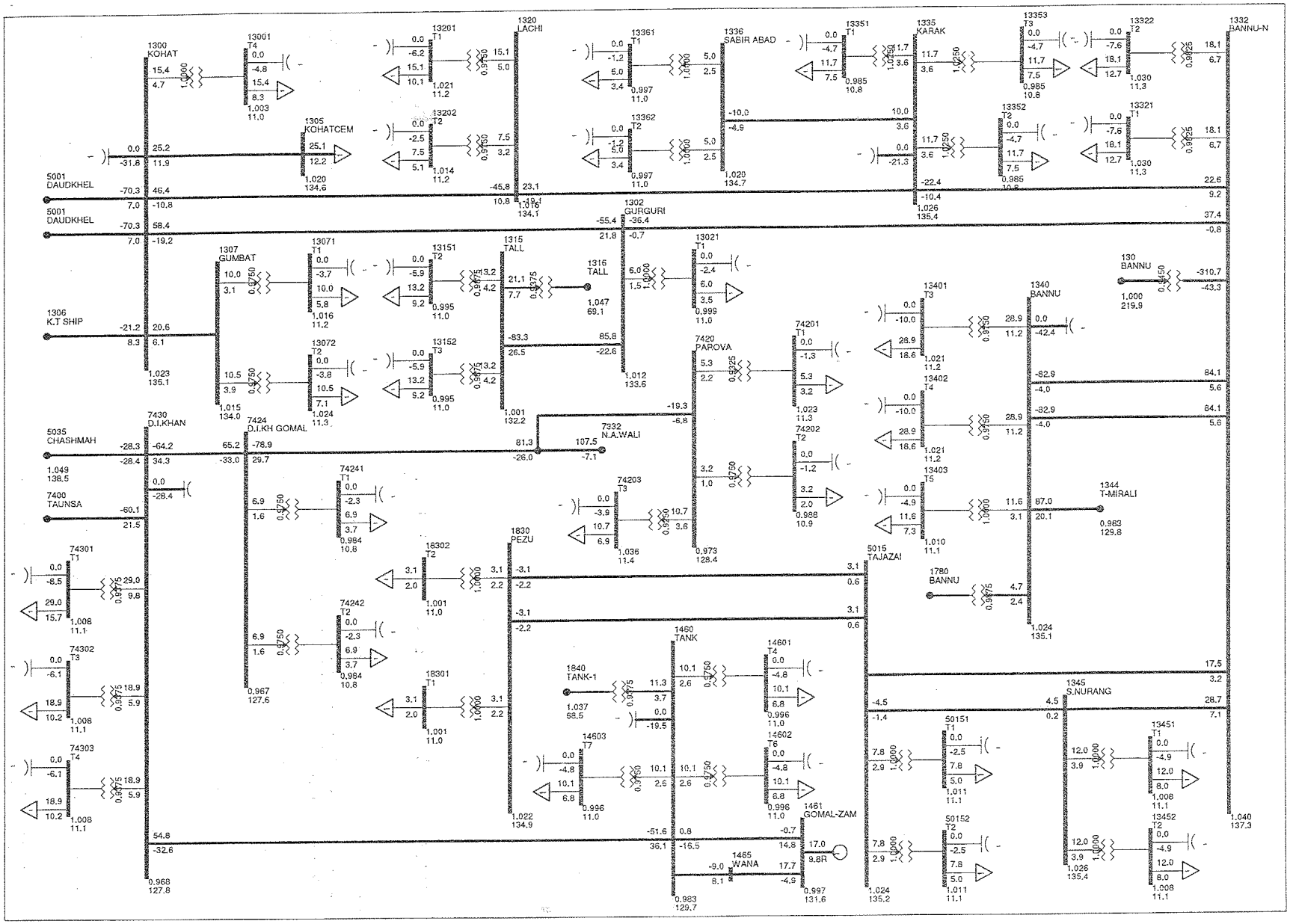

PESCO LOAD FLOW STUDY FOR (DIIP) FIVE YEAR PLAN
YEAR 2018: BASE CASE WITH REINFORCEMENT

Exhibit-1-2018-2.5

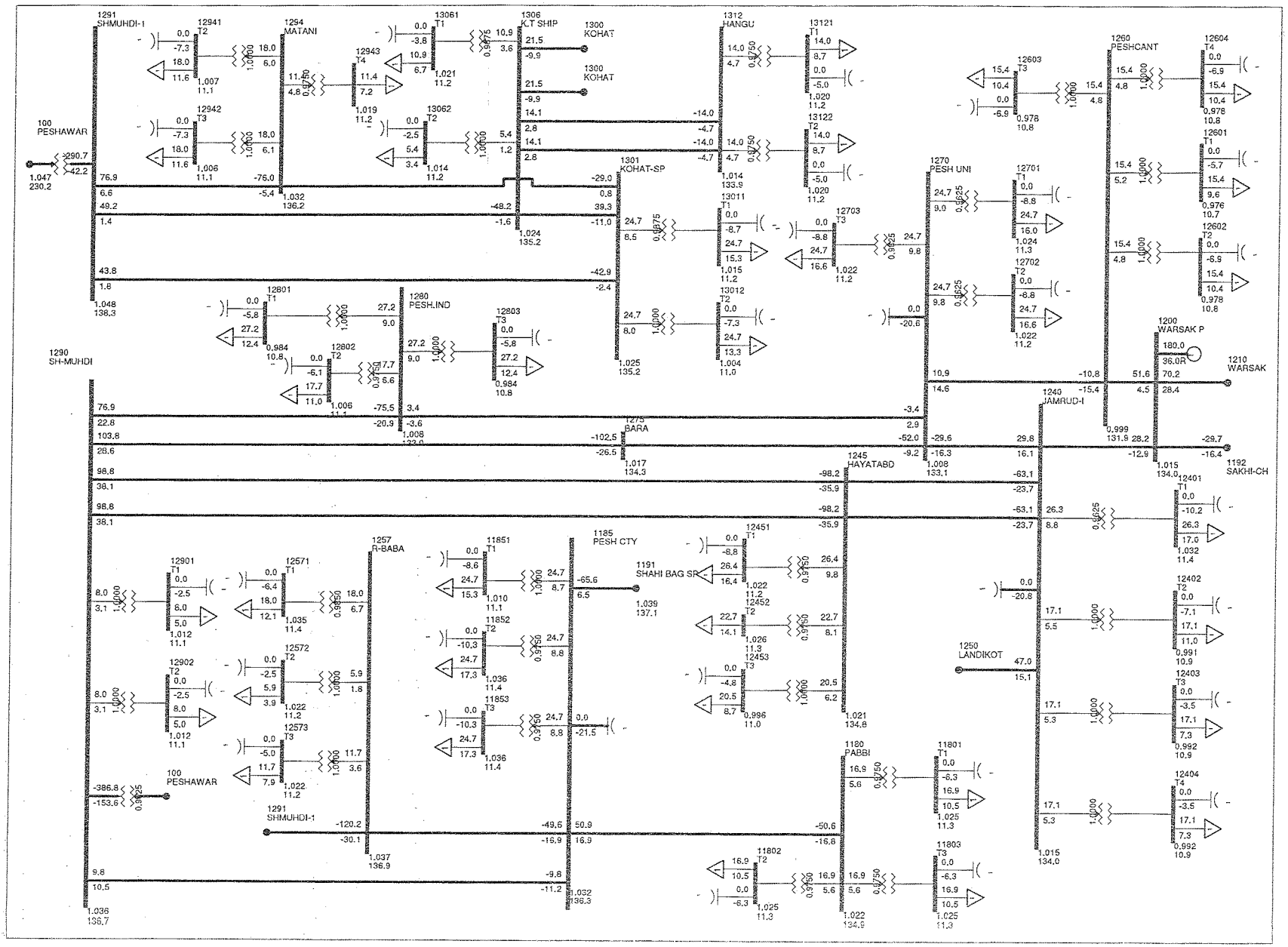

PESCO LOAD FLOW STUDY FOR (DIIP) FIVE YEAR PLAN
YEAR 2018: BASE CASE WITH REINFORCEMENT

Exhibit-1-2018-2.6

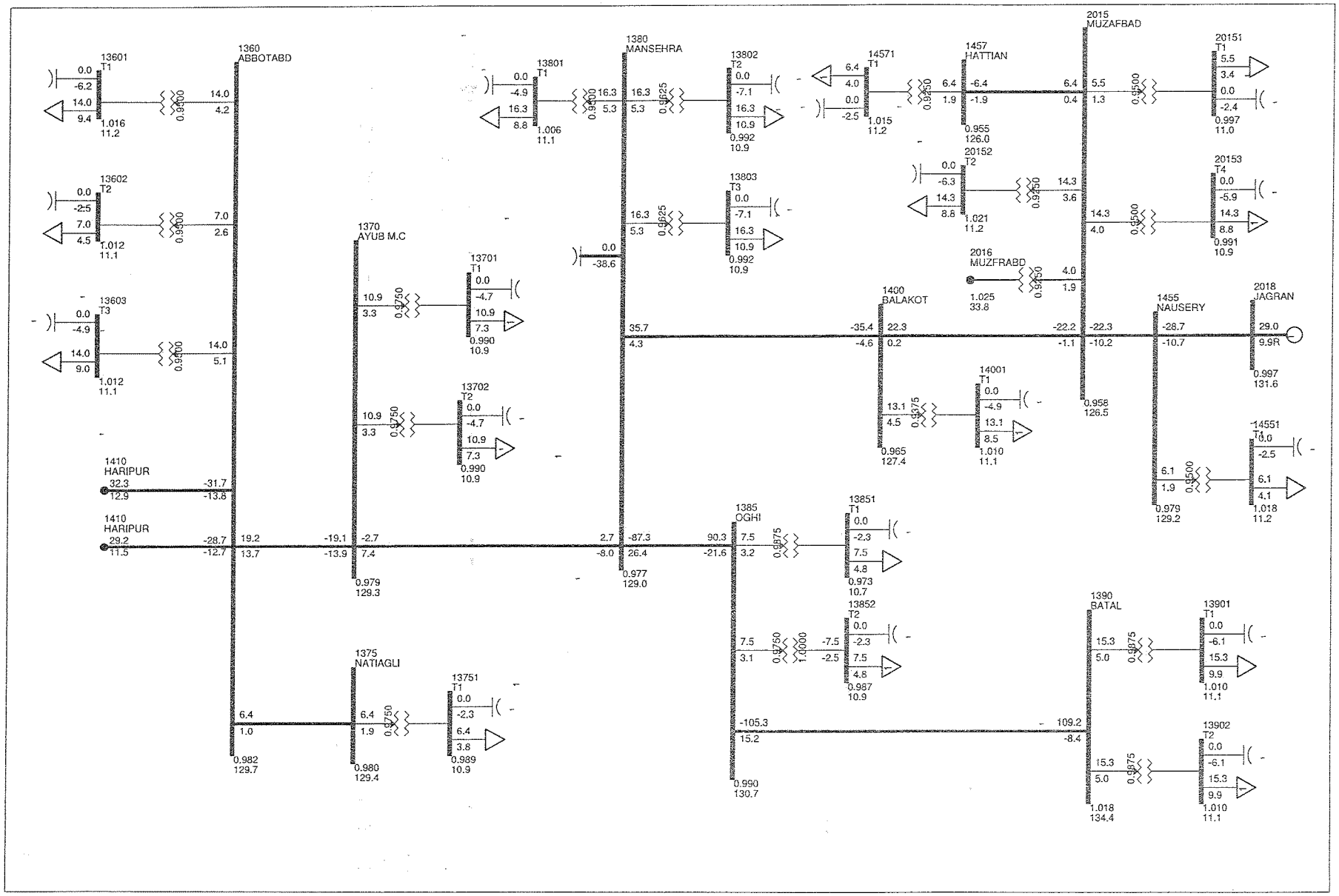

PESCO LOAD FLOW STUDY FOR (DIIP) FIVE YEAR PLAN
YEAR 2018: BASE CASE WITH REINFORCEMENT

Exhibit-1-2018-2.7

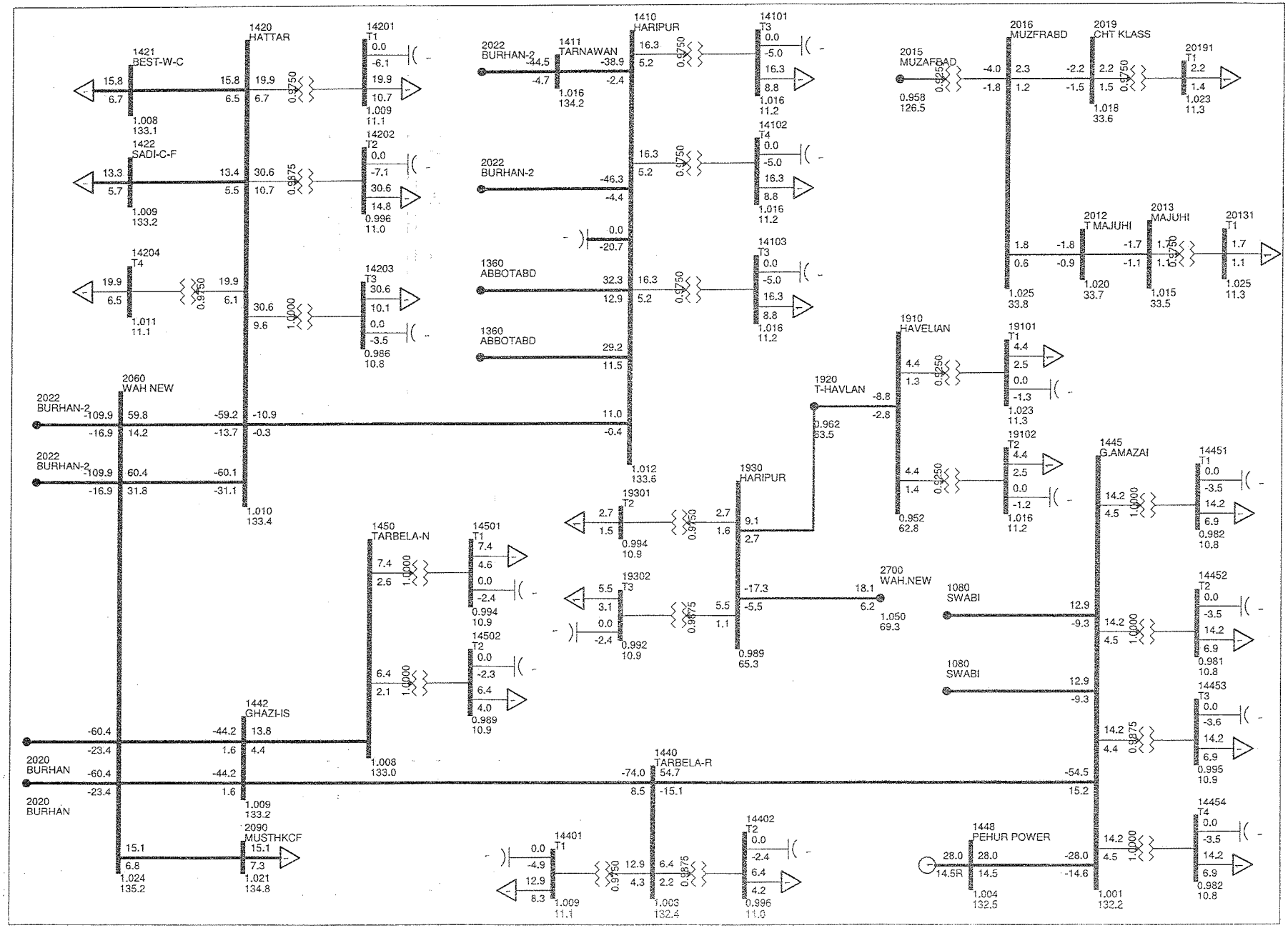

PESCO LOAD FLOW STUDY FOR (DIIP) FIVE YEAR PLAN
YEAR 2018: BASE CASE WITH REINFORCEMENT

Exhibit-1-2018-2.8

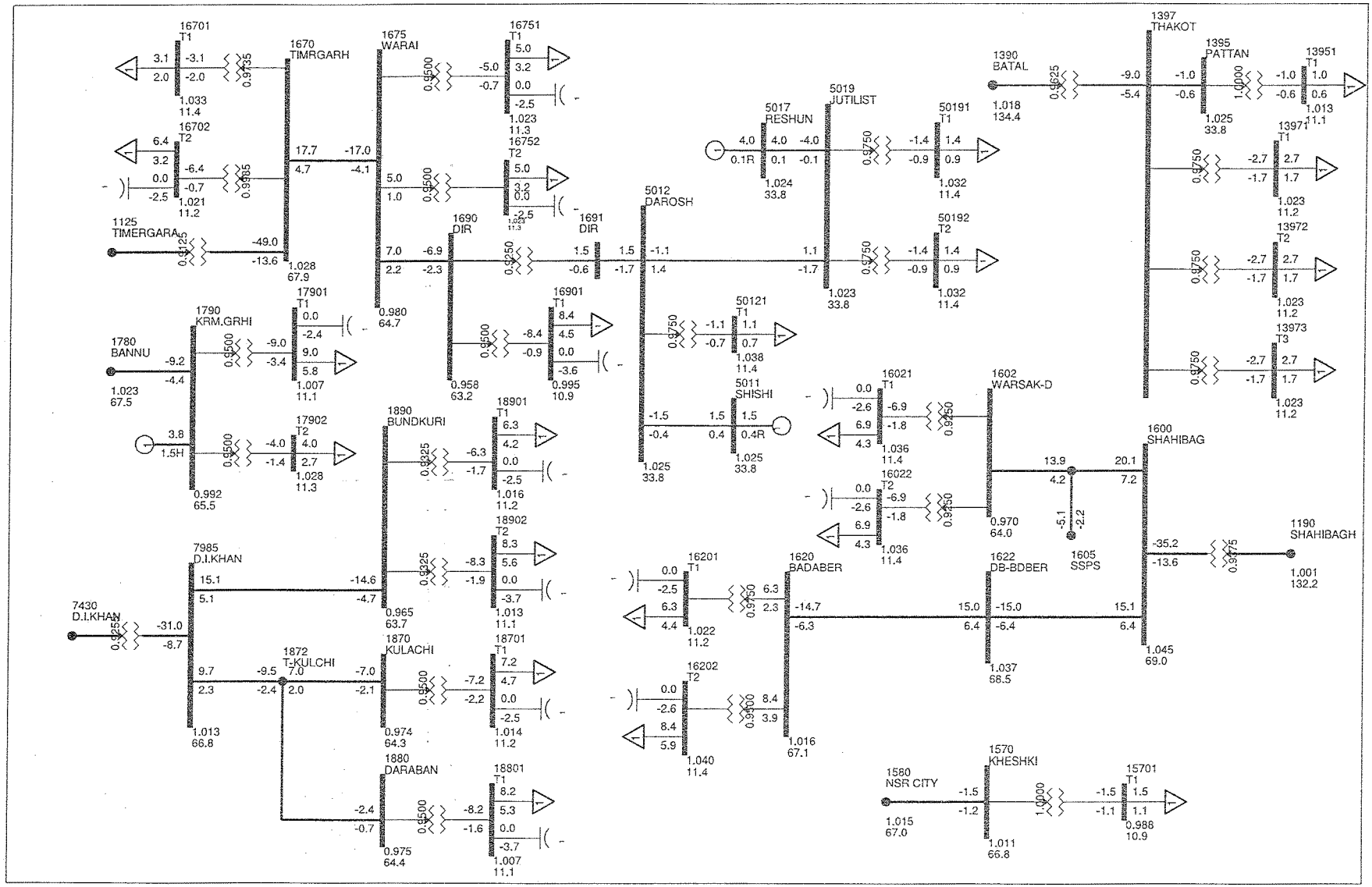

PESCO LOAD FLOW STUDY FOR (DIIP) FIVE YEAR PLAN
YEAR 2019: BASE CASE

Exhibit-1-2019-1.1

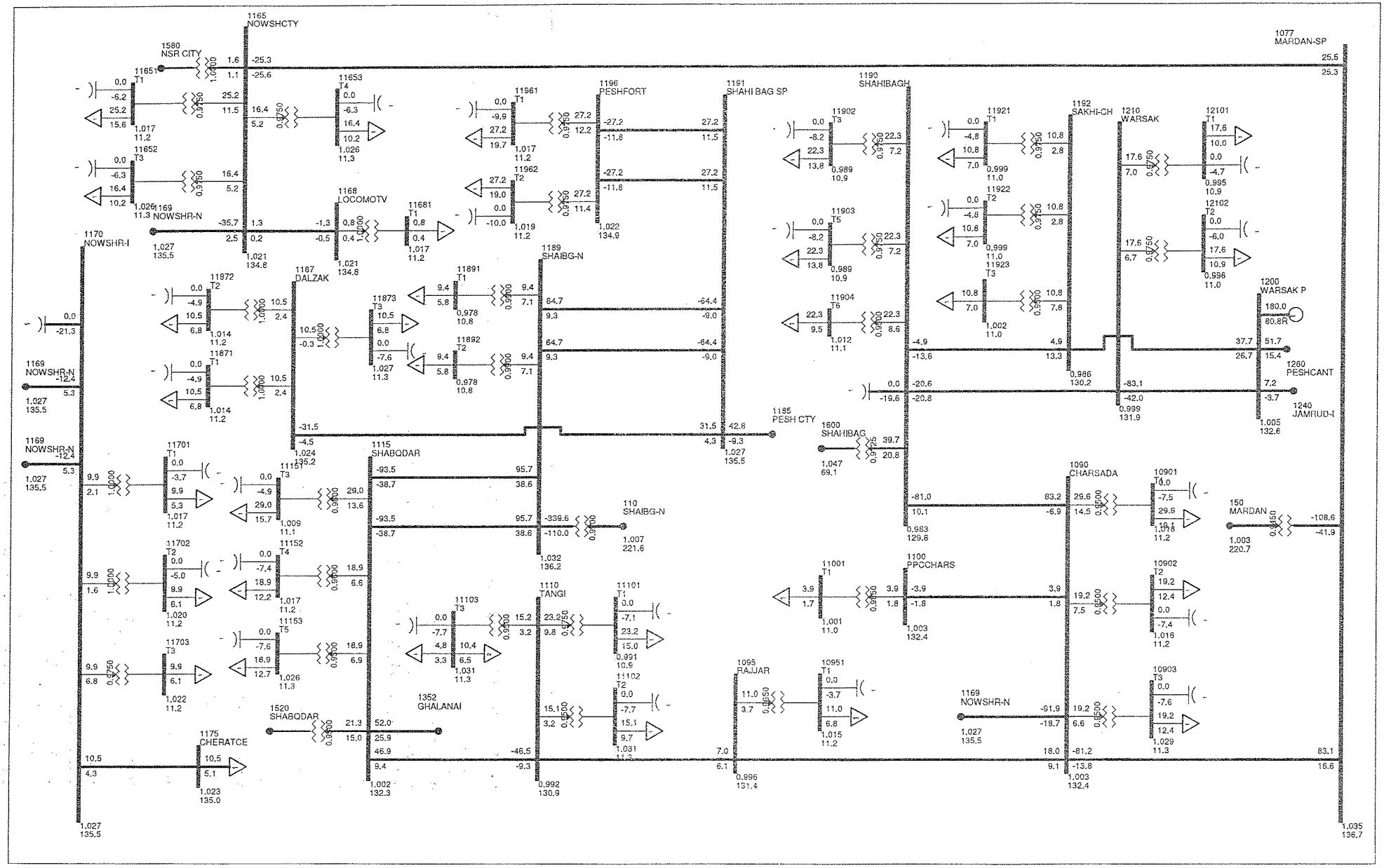

PESCO LOAD FLOW STUDY FOR (DIIP) FIVE YEAR PLAN
YEAR 2019: BASE CASE

Exhibit-1-2019-1.2

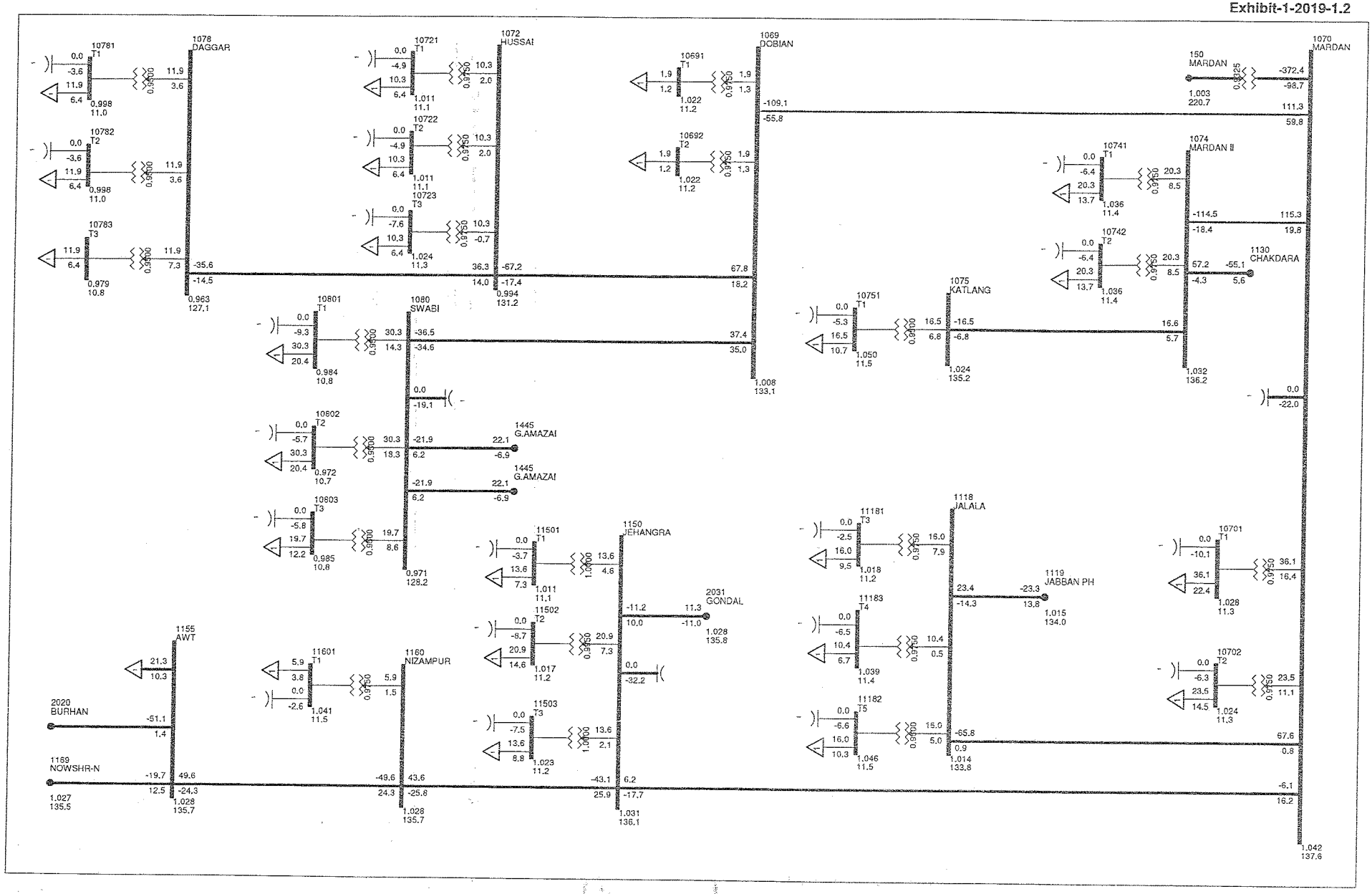

PESCO LOAD FLOW STUDY FOR (DIIP) FIVE YEAR PLAN
YEAR 2019: BASE CASE

Exhibit-1-2019-1.3

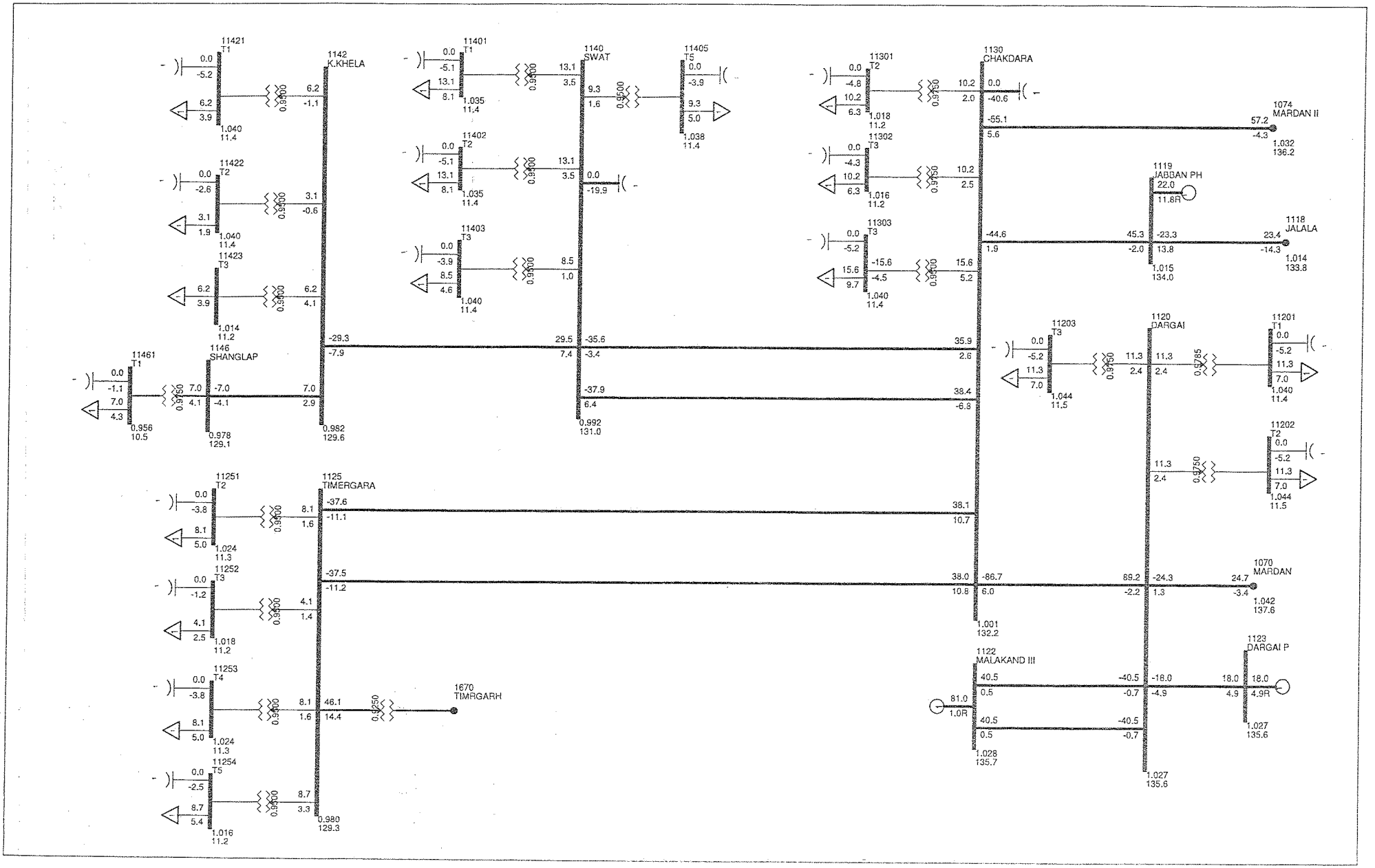

PESCO LOAD FLOW STUDY FOR (DIIP) FIVE YEAR PLAN
YEAR 2019: BASE CASE

Exhibit-1-2019-1.4

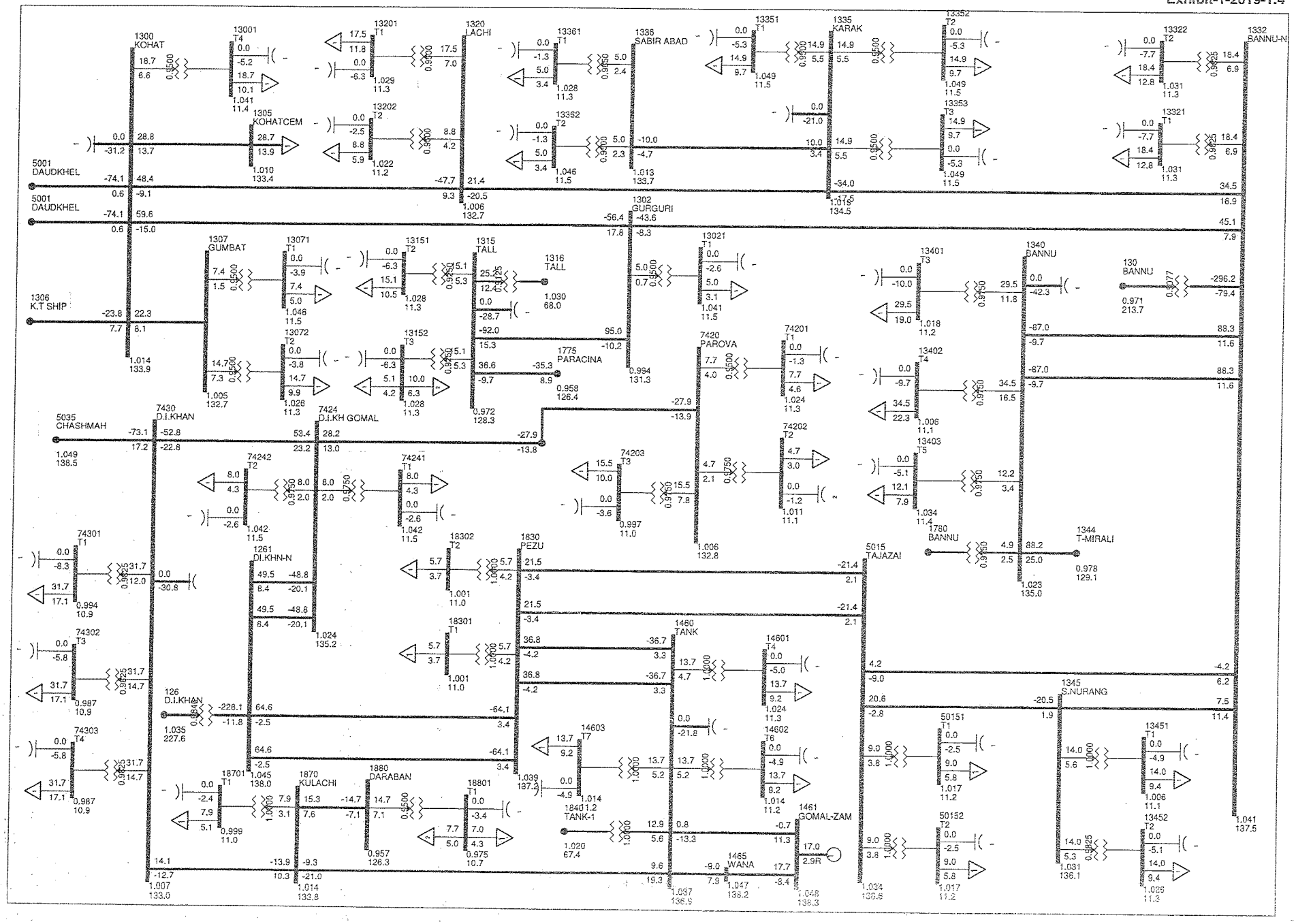

PESCO LOAD FLOW STUDY FOR (DIIP) FIVE YEAR PLAN
YEAR 2019: BASE CASE

Exhibit-1-2019-1.5

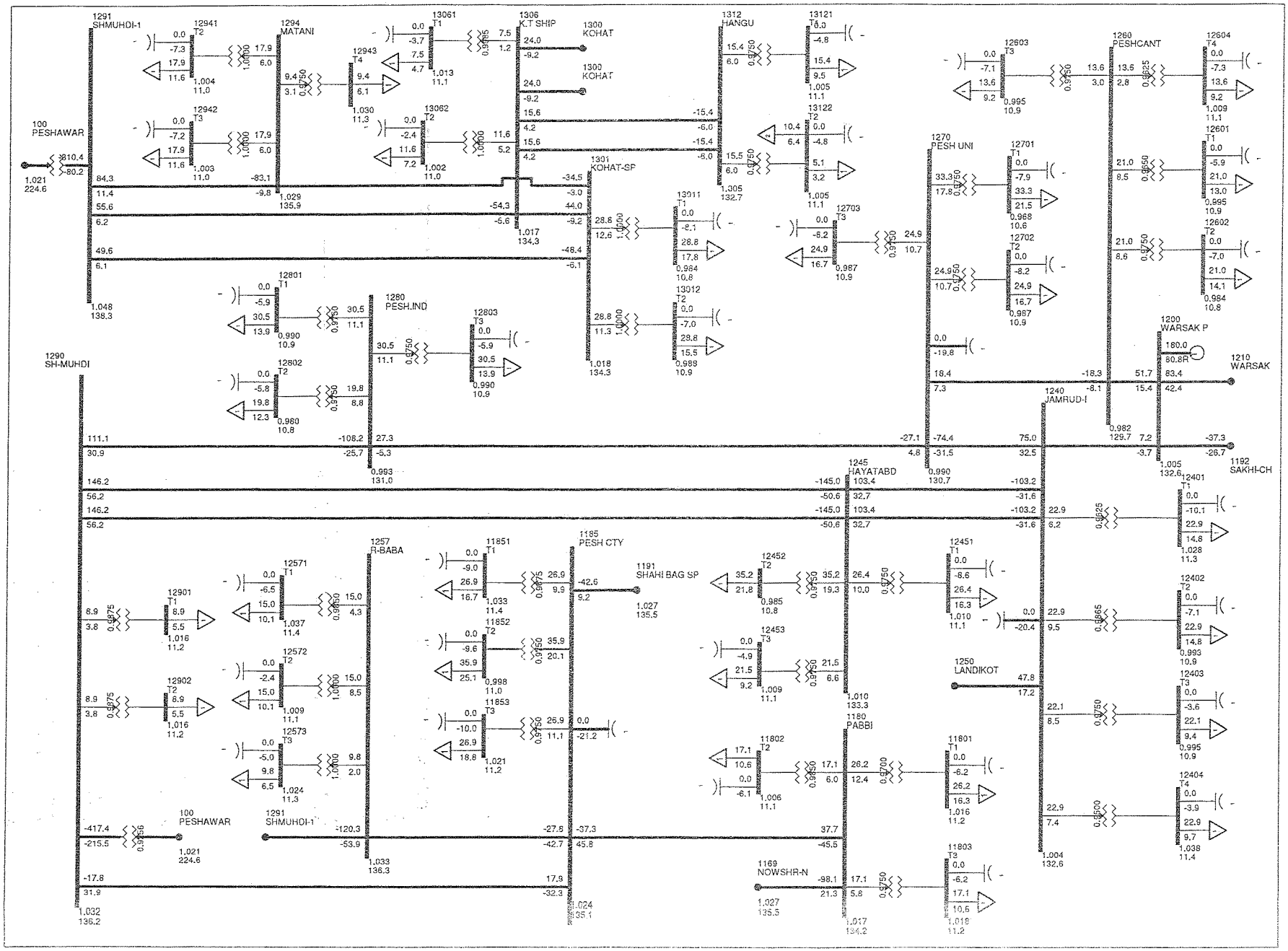

PESCO LOAD FLOW STUDY FOR (DIIP) FIVE YEAR PLAN
YEAR 2019: BASE CASE

Exhibit-1-2019-1.6

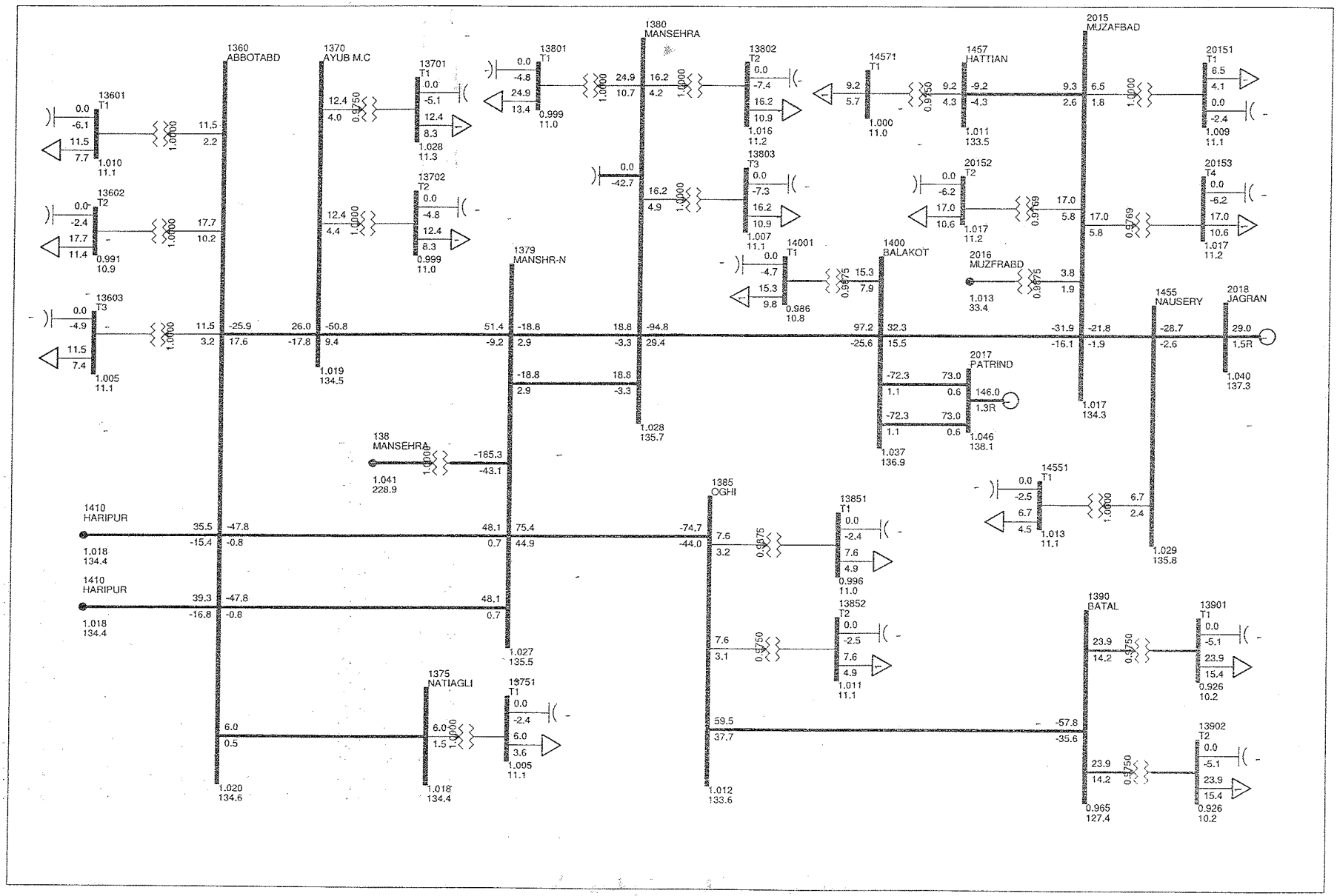

PESCO LOAD FLOW STUDY FOR (DIIP) FIVE YEAR PLAN
YEAR 2019: BASE CASE

Exhibit-1-2019-1.7

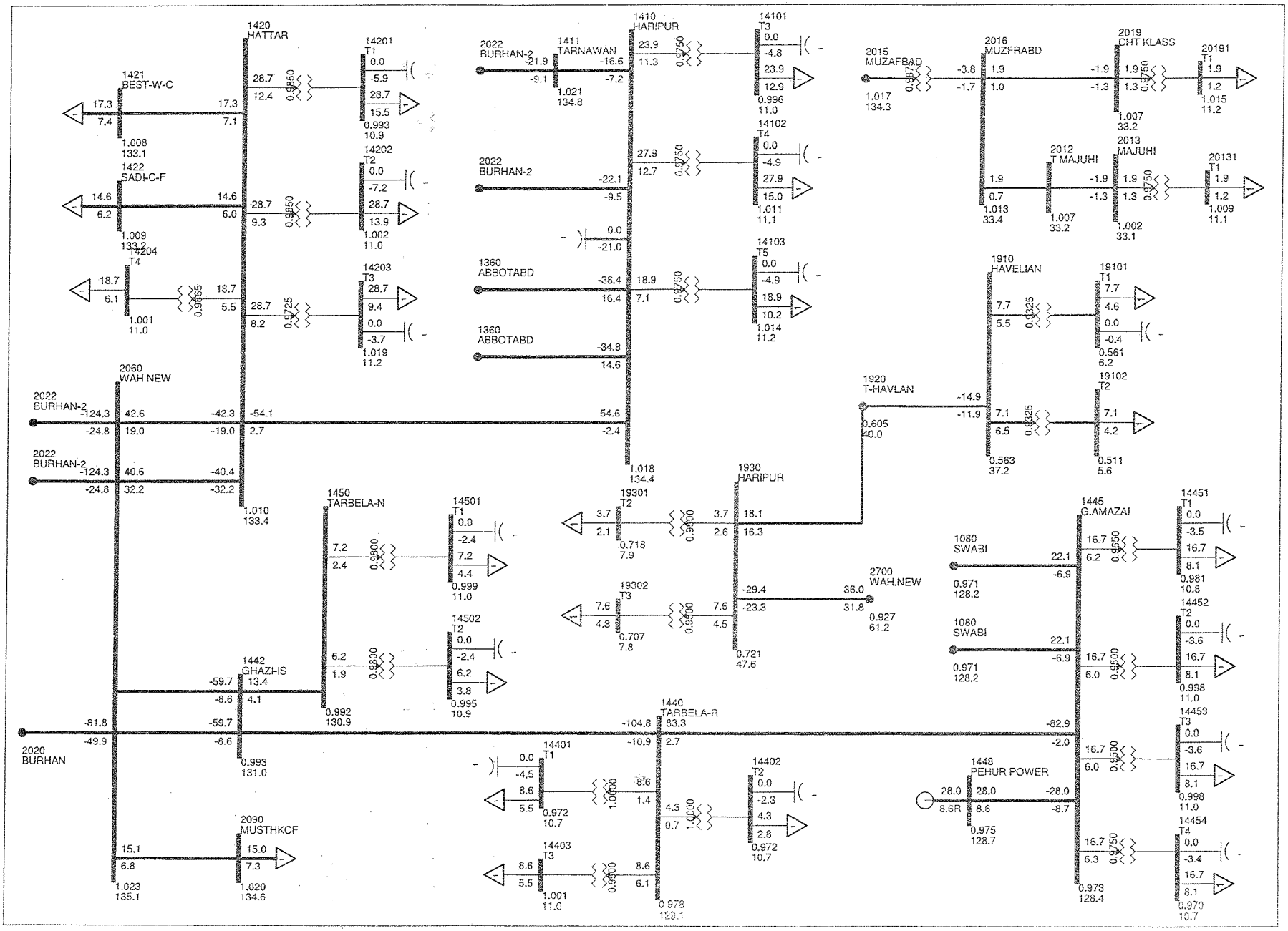

PESCO LOAD FLOW STUDY FOR (DIIP) FIVE YEAR PLAN
YEAR 2019: BASE CASE

Exhibit-1-2019-1.8

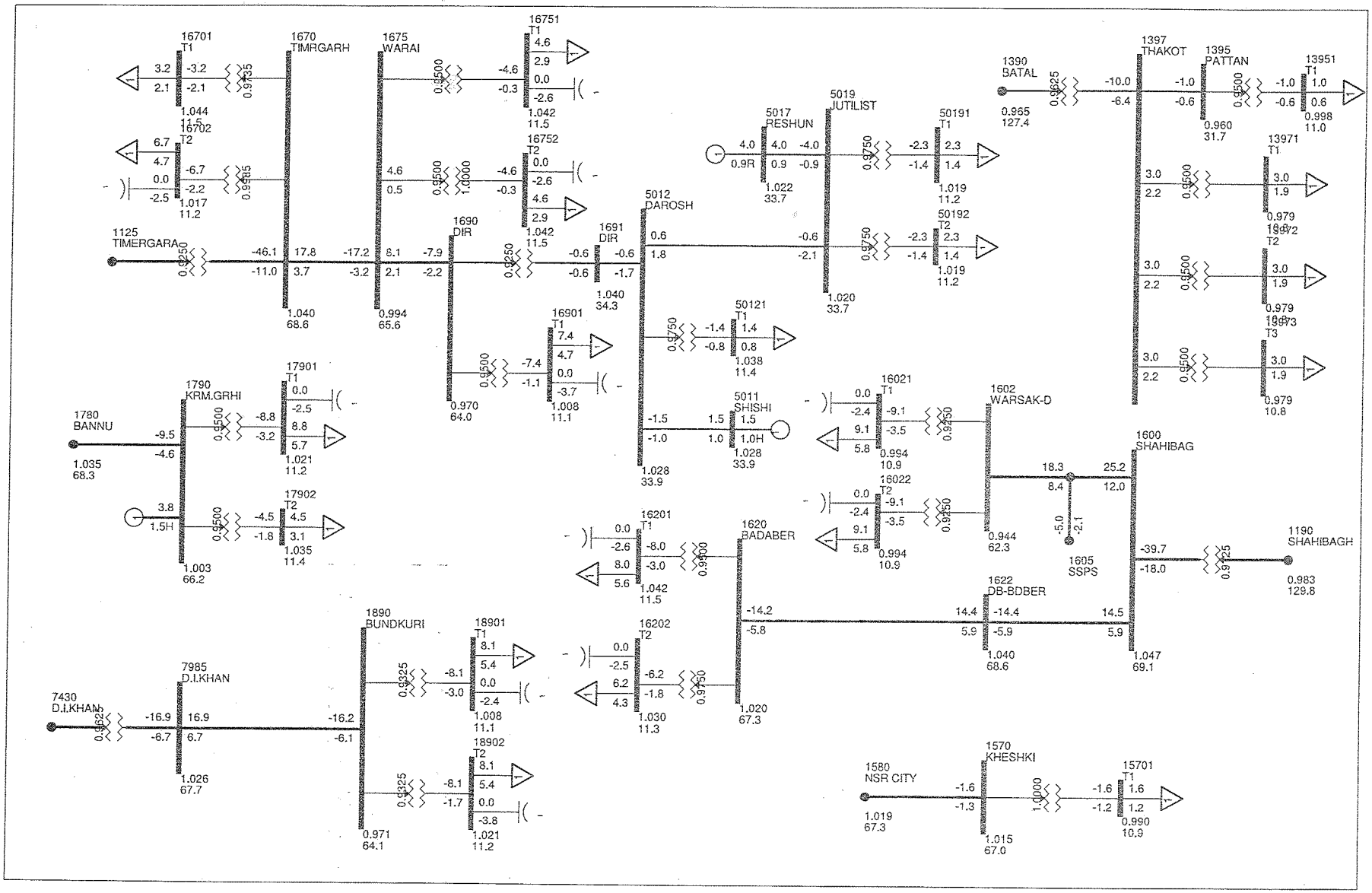

PESCO LOAD FLOW STUDY FOR (DIIP) FIVE YEAR PLAN
YEAR 2019: BASE CASE WITH REINFORCEMENT

Exhibit-1-2019-2.1

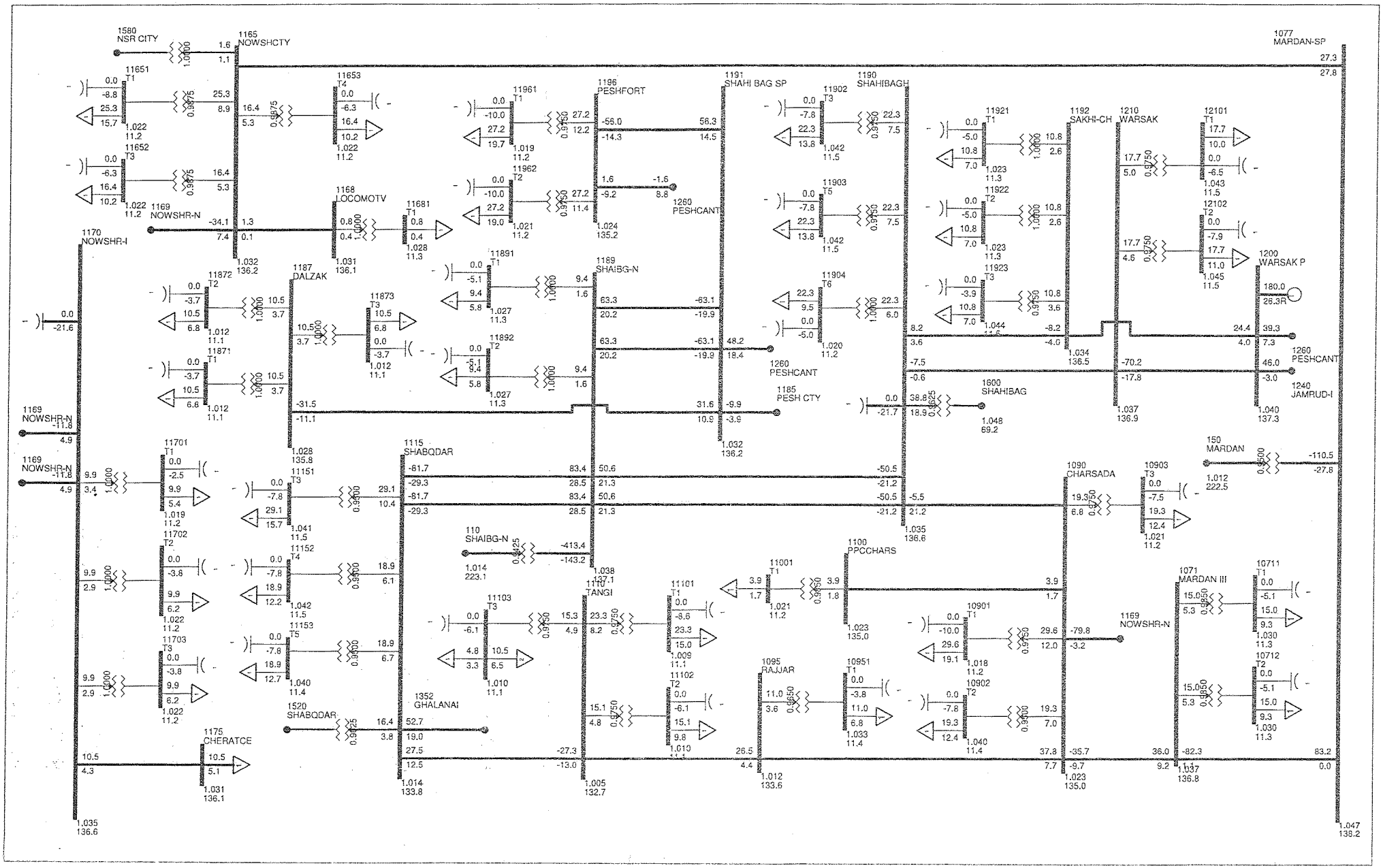

PESCO LOAD FLOW STUDY FOR (DIIP) FIVE YEAR PLAN
YEAR 2019: BASE CASE WITH REINFORCEMENT

Exhibit-1-2019-2.2

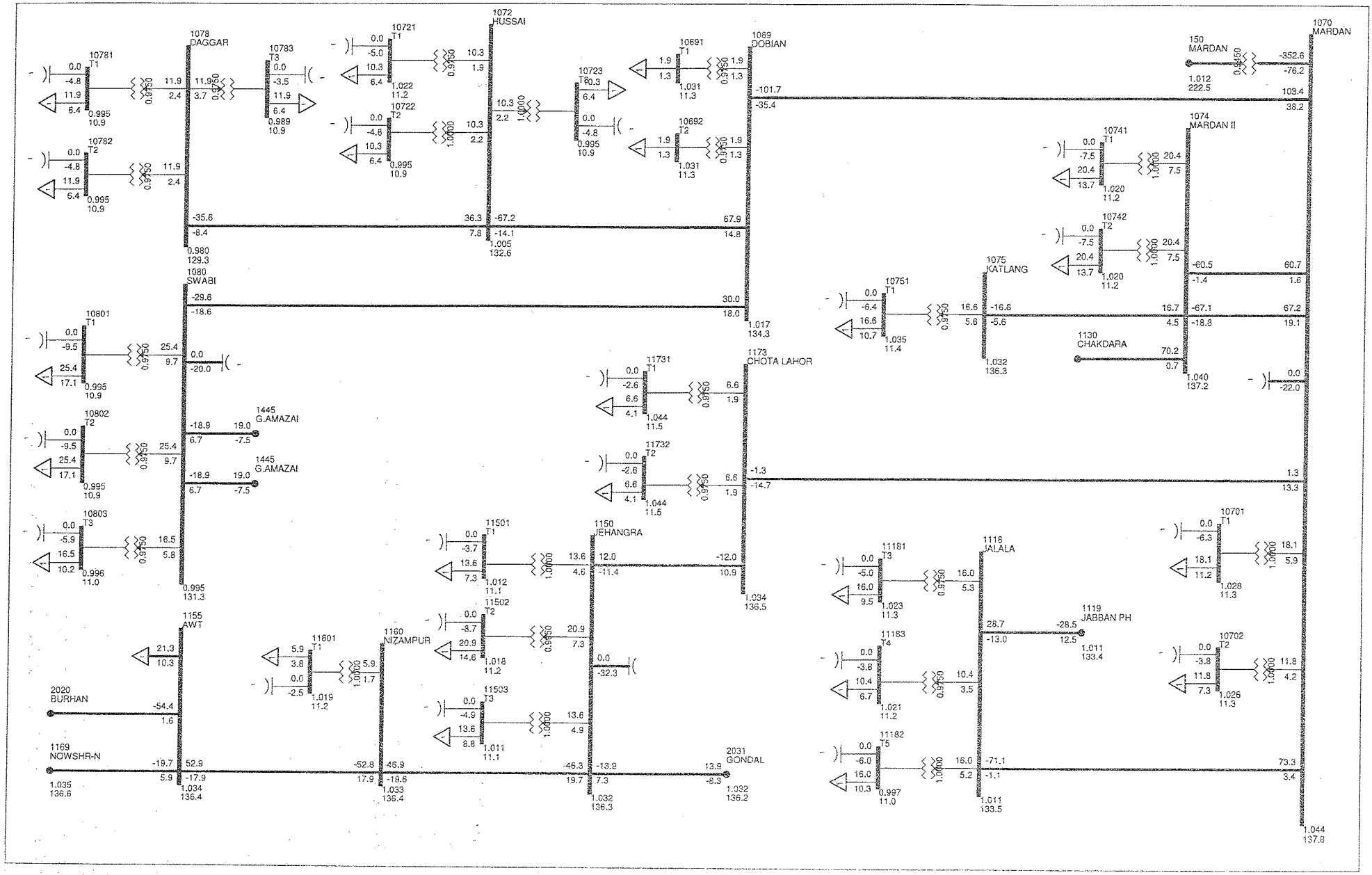

PESCO LOAD FLOW STUDY FOR (DIIP) FIVE YEAR PLAN
YEAR 2019: BASE CASE WITH REINFORCEMENT

Exhibit-1-2019-2.3

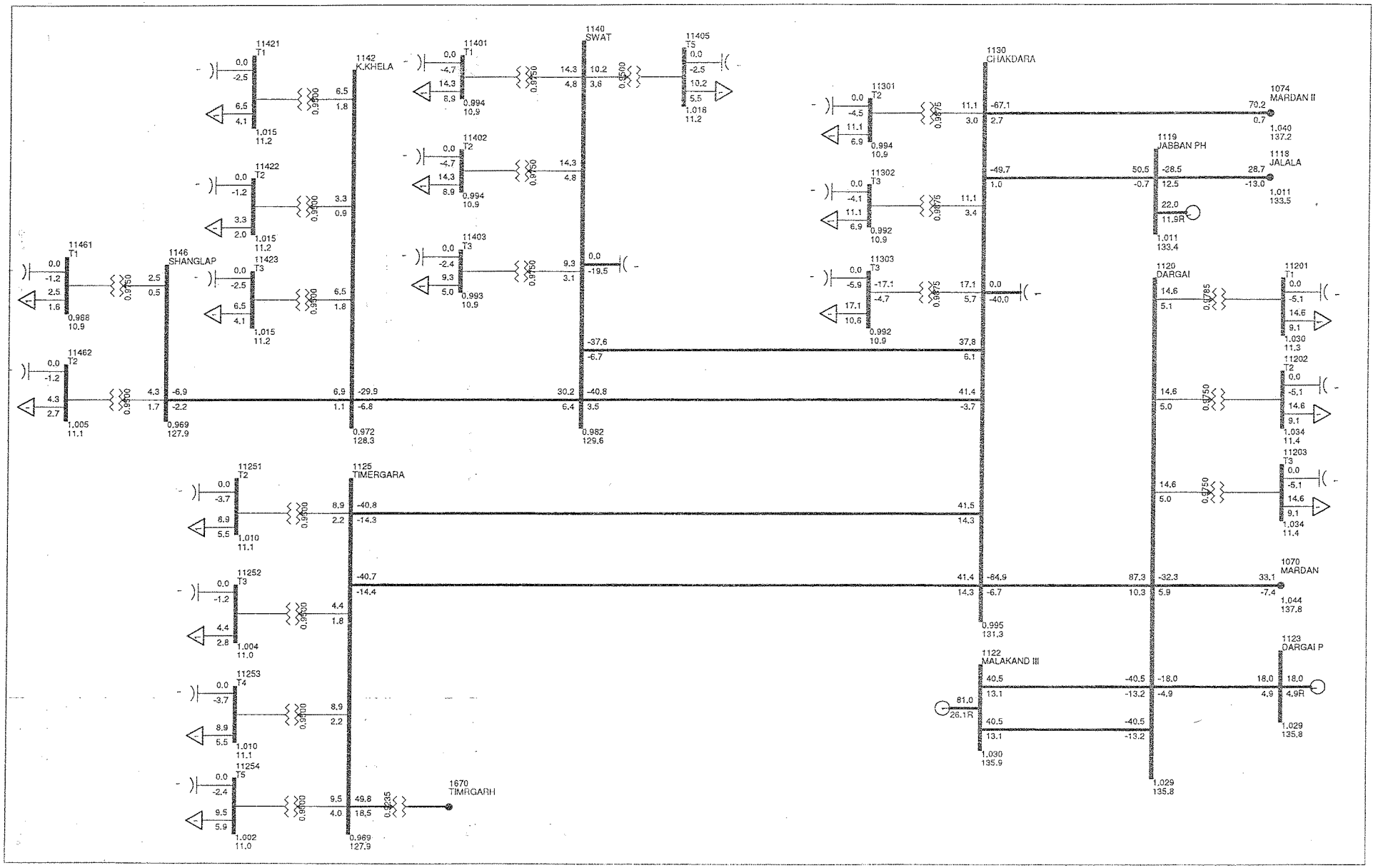

PESCO LOAD FLOW STUDY FOR (DIIP) FIVE YEAR PLAN
YEAR 2019: BASE CASE WITH REINFORCEMENT

Exhibit-1-2019-2.4

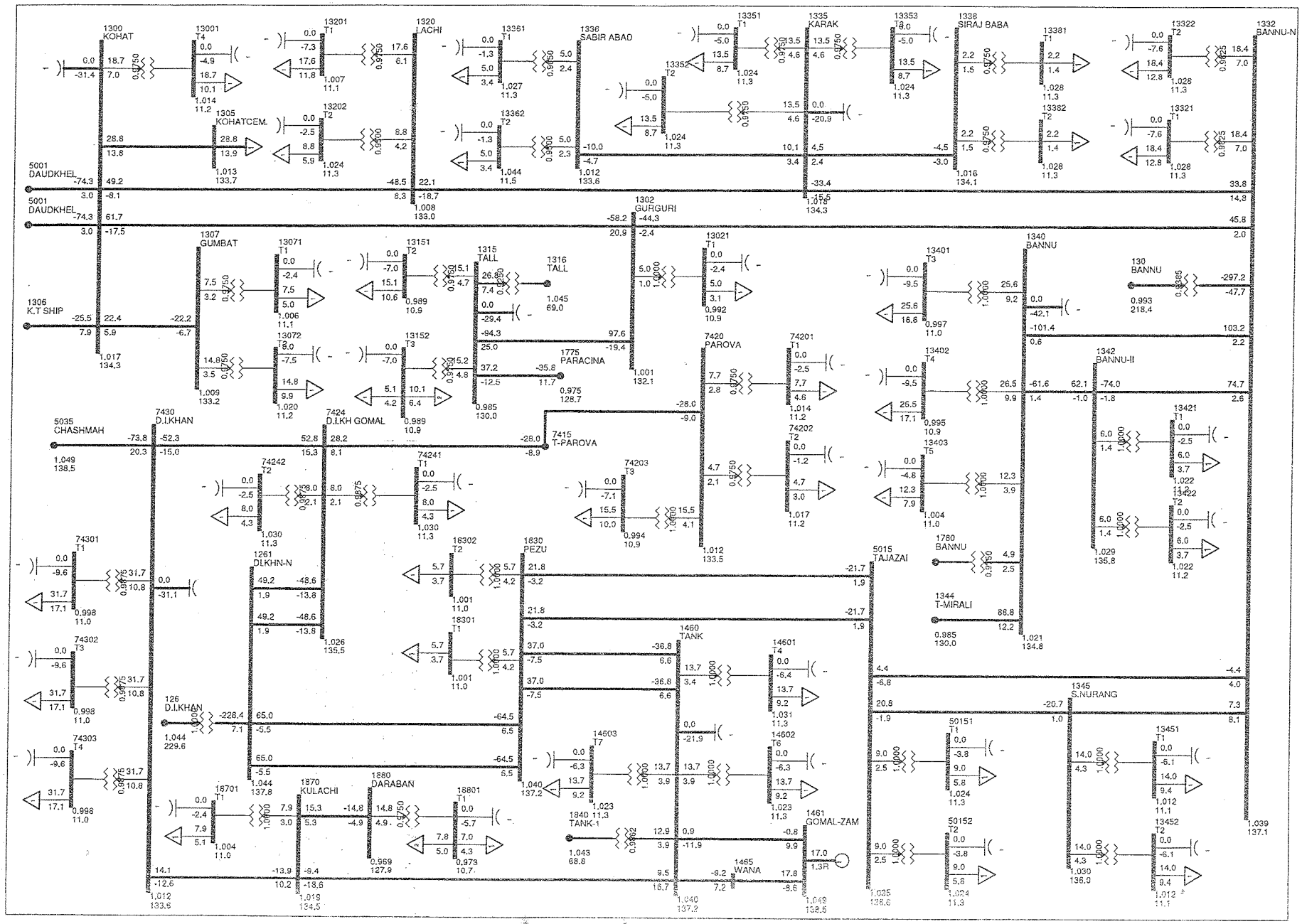

PESCO LOAD FLOW STUDY FOR (DIIP) FIVE YEAR PLAN
YEAR 2019: BASE CASE WITH REINFORCEMENT

Exhibit-1-2019-2.5

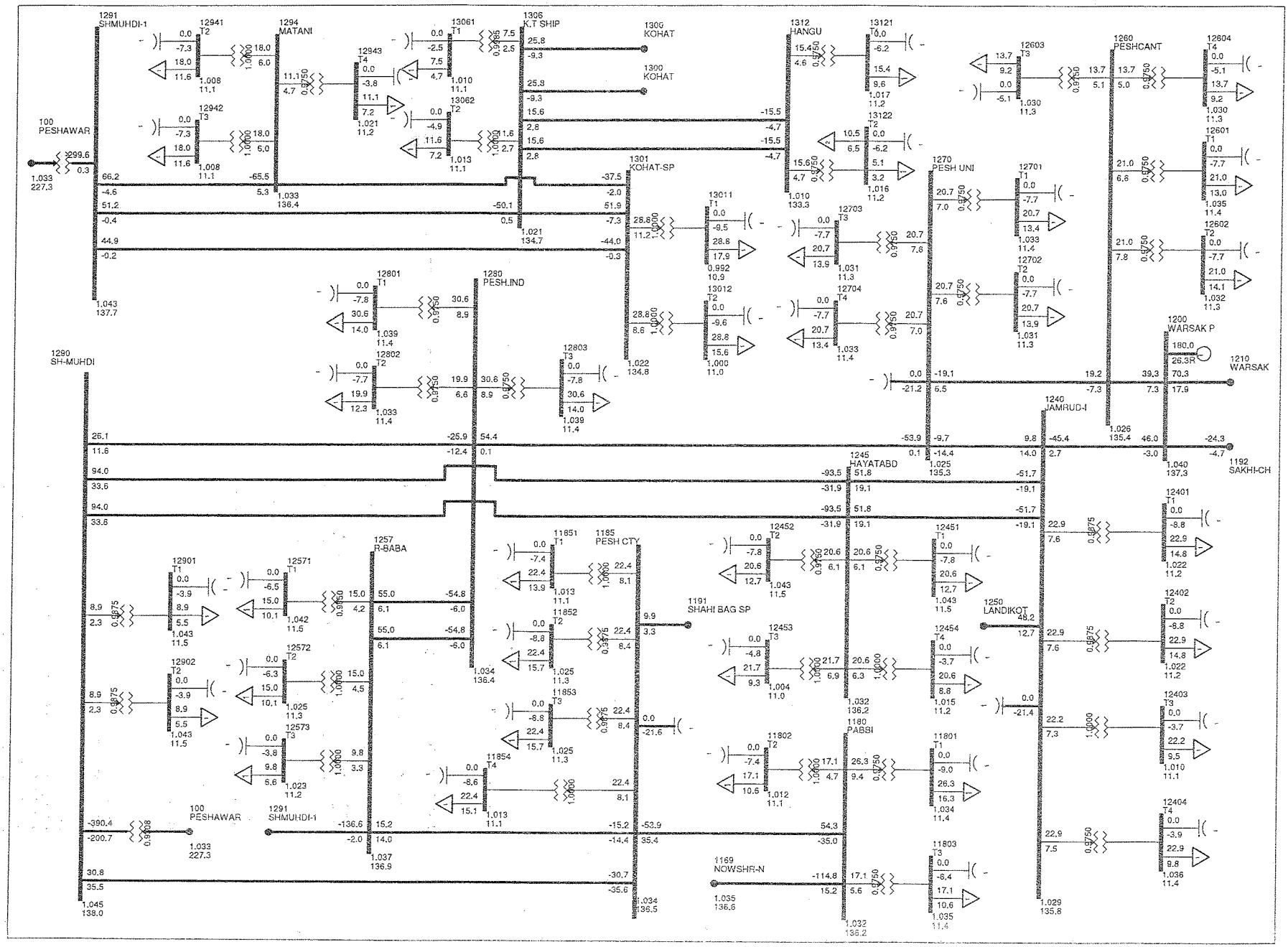

PESCO LOAD FLOW STUDY FOR (DIIP) FIVE YEAR PLAN
YEAR 2019: BASE CASE WITH REINFORCEMENT

Exhibit-1-2019-2.6

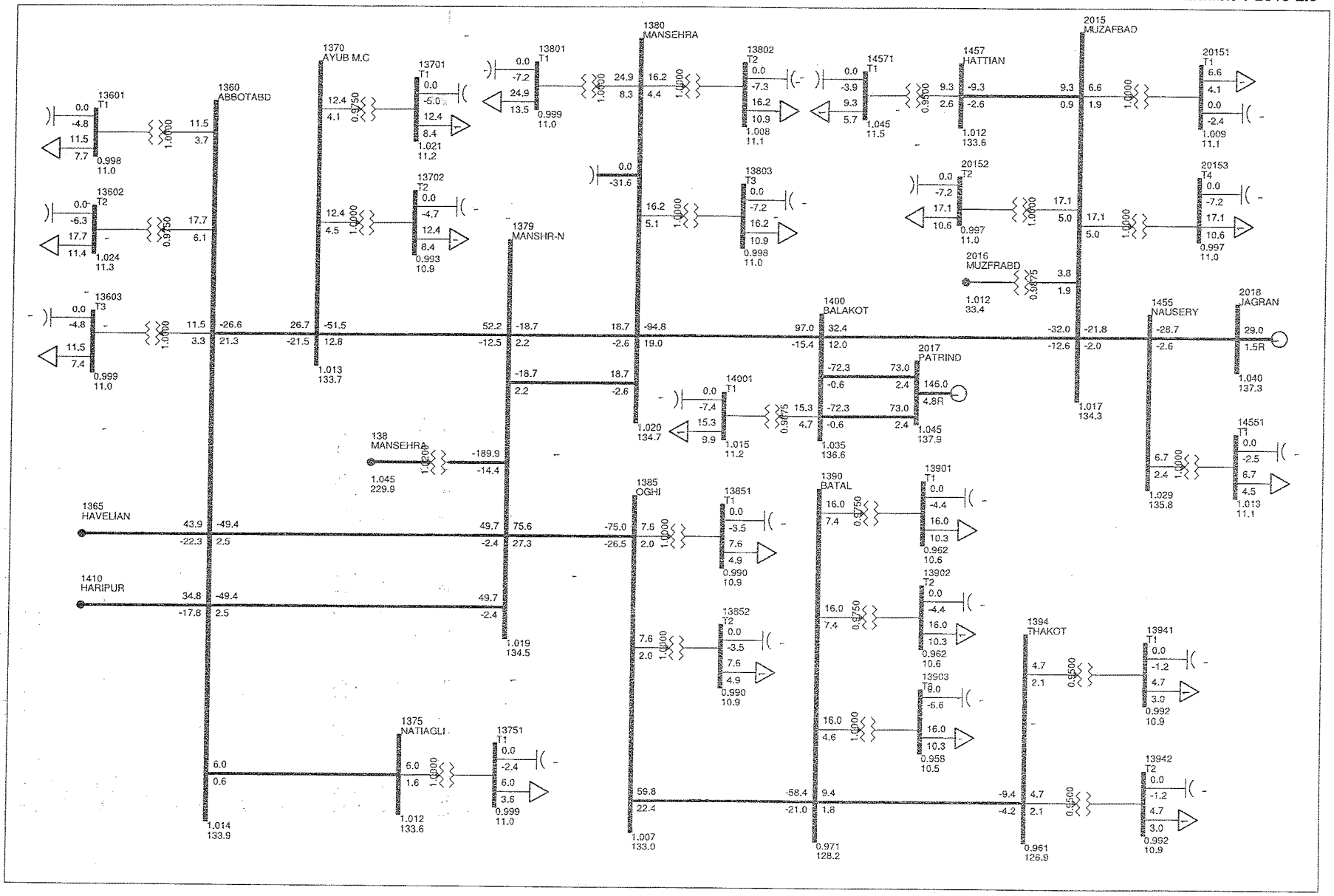

PESCO LOAD FLOW STUDY FOR (DIIP) FIVE YEAR PLAN
YEAR 2019: BASE CASE WITH REINFORCEMENT

Exhibit-1-2019-2.7

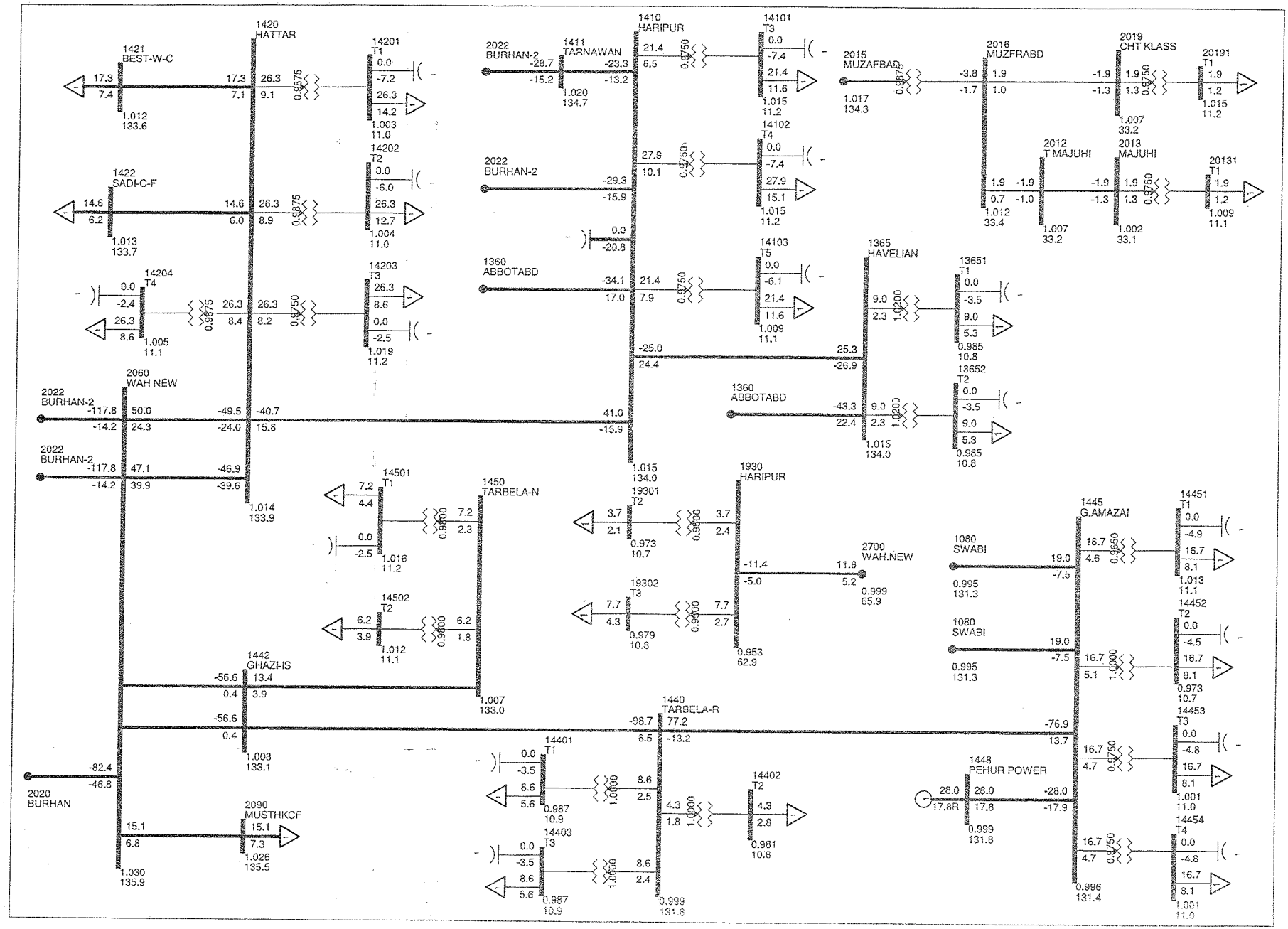

PESCO LOAD FLOW STUDY FOR (DIIP) FIVE YEAR PLAN
YEAR 2019: BASE CASE WITH REINFORCEMENT

Exhibit-1-2019-2.8

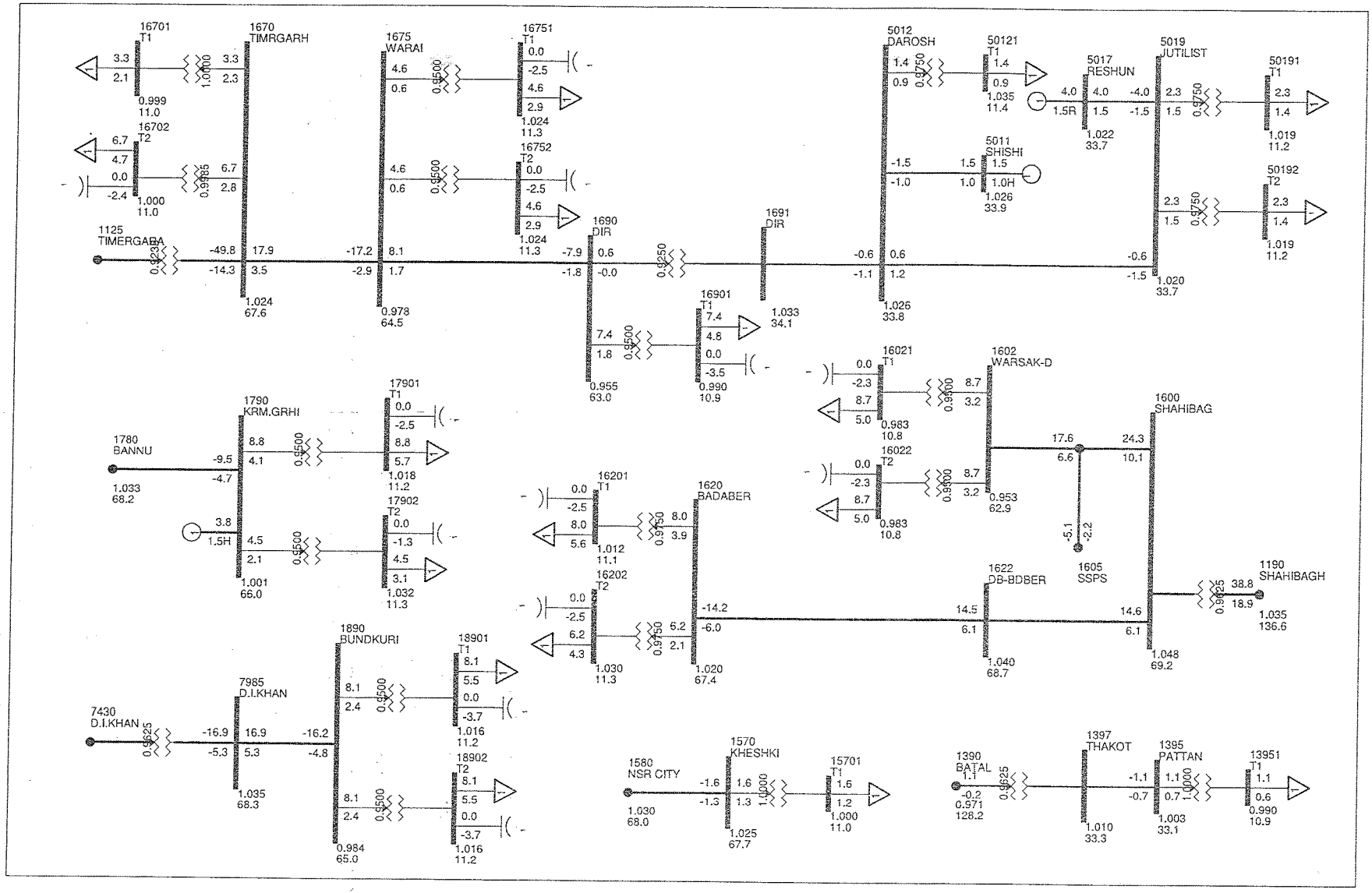

PESCO LOAD FLOW STUDY FOR (DIIP) FIVE YEAR PLAN
YEAR 2020: BASE CASE

Exhibit-1-2020-1.1

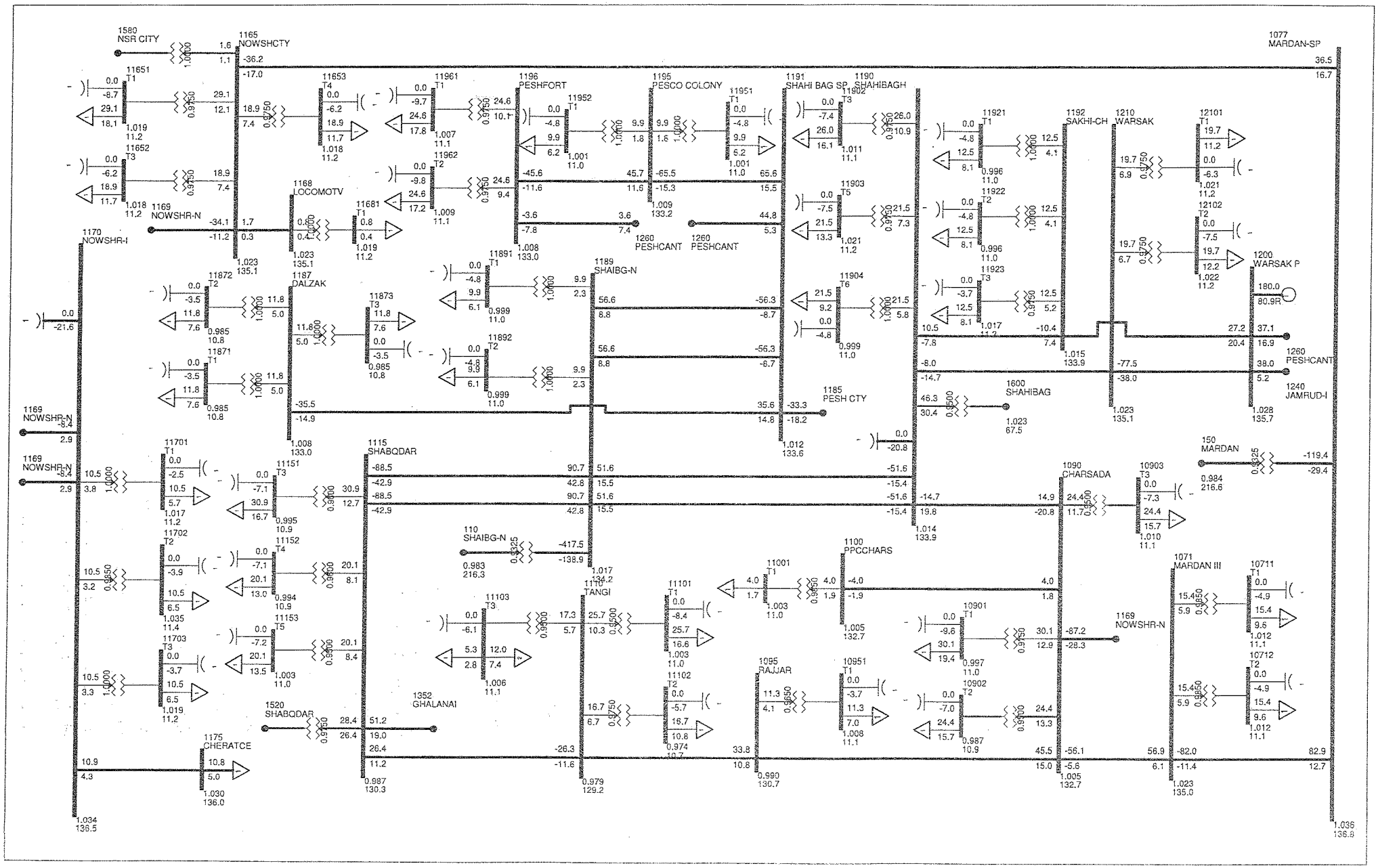

PESCO LOAD FLOW STUDY FOR (DIIP) FIVE YEAR PLAN
YEAR 2020: BASE CASE

Exhibit-1-2020-1.2

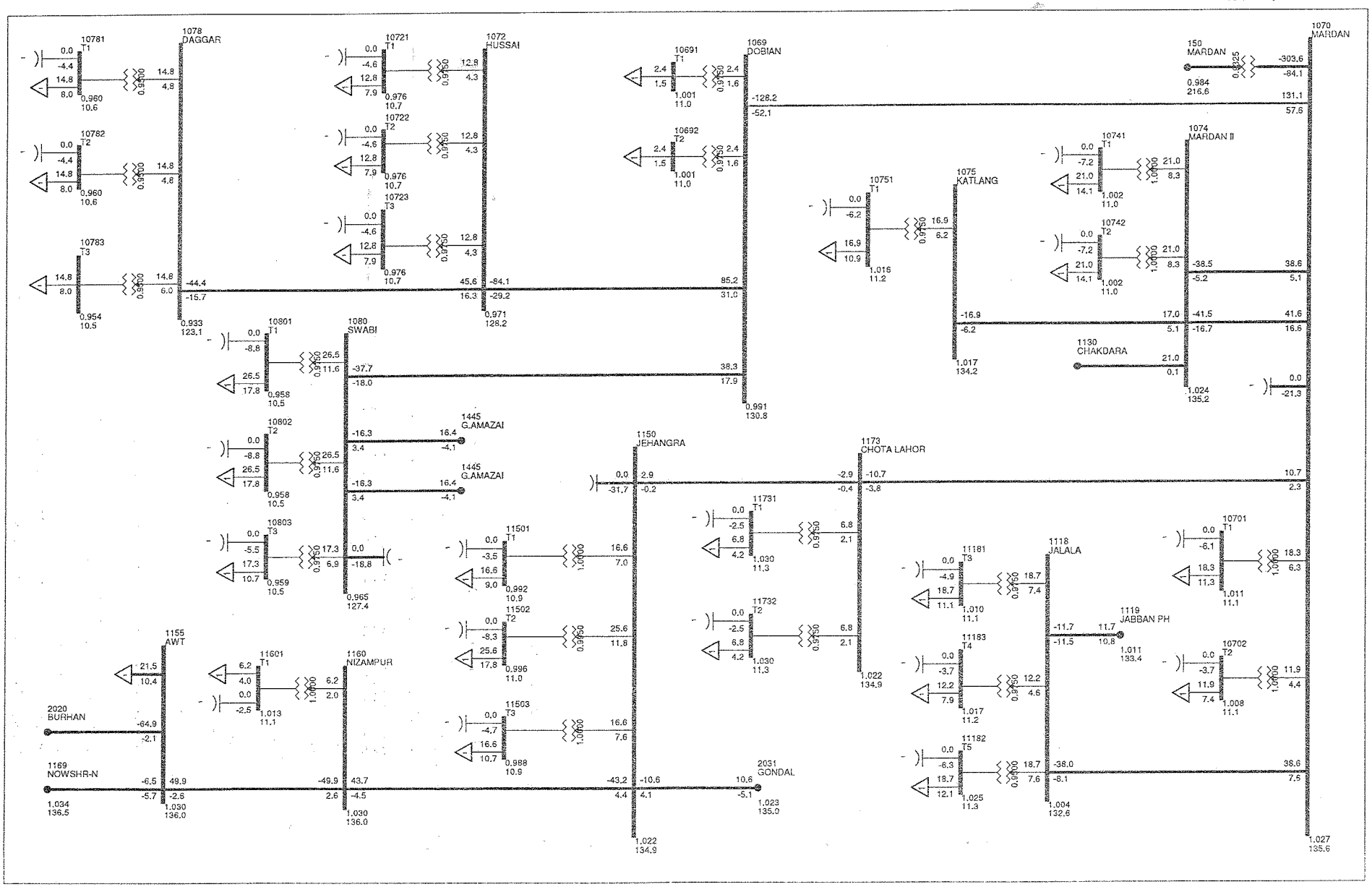

PESCO LOAD FLOW STUDY FOR (DIIP) FIVE YEAR PLAN
YEAR 2020: BASE CASE

Exhibit-1-2020-1.3

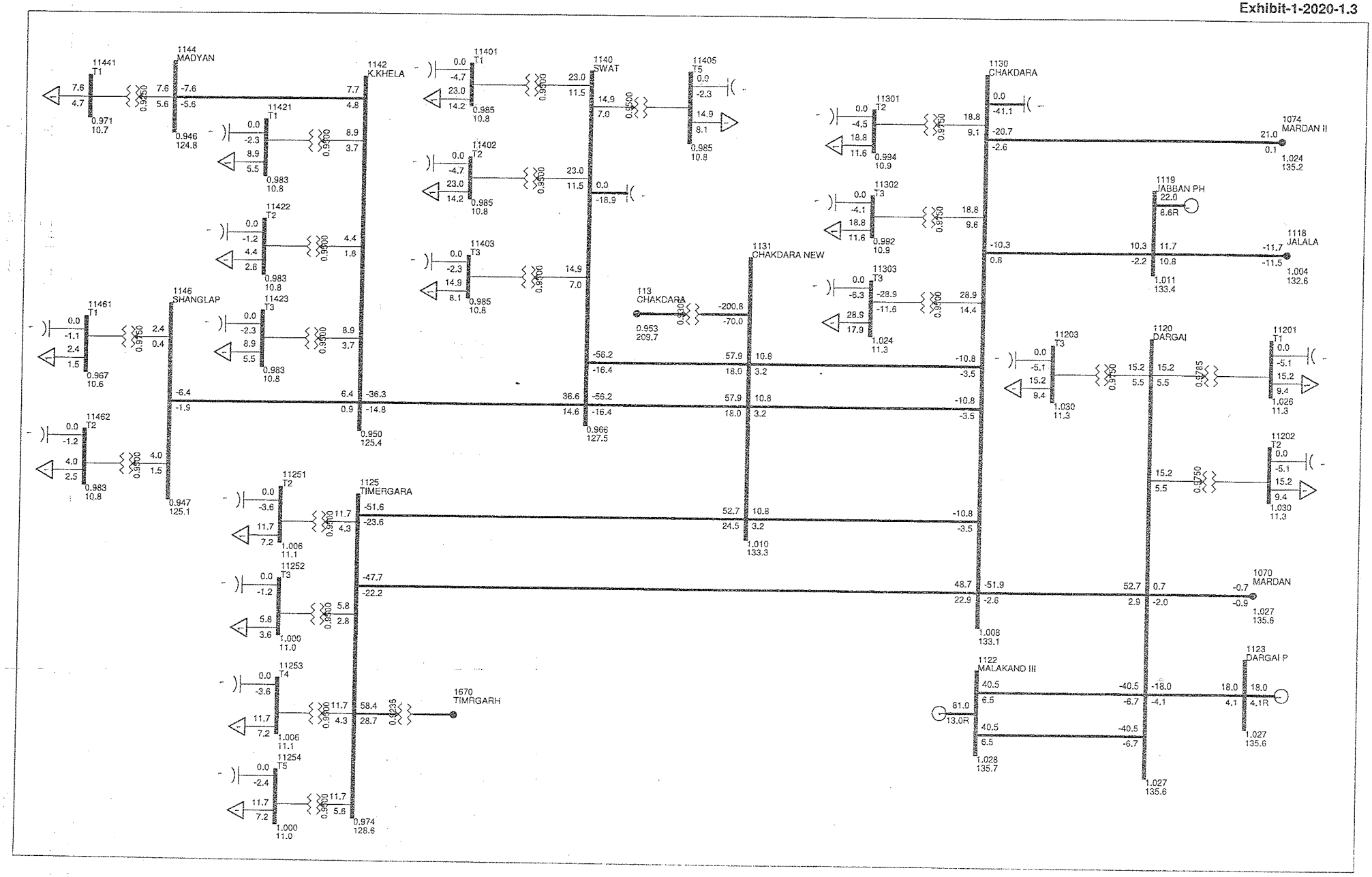

PESCO LOAD FLOW STUDY FOR (DIIP) FIVE YEAR PLAN
YEAR 2020: BASE CASE

Exhibit-1-2020-1.4

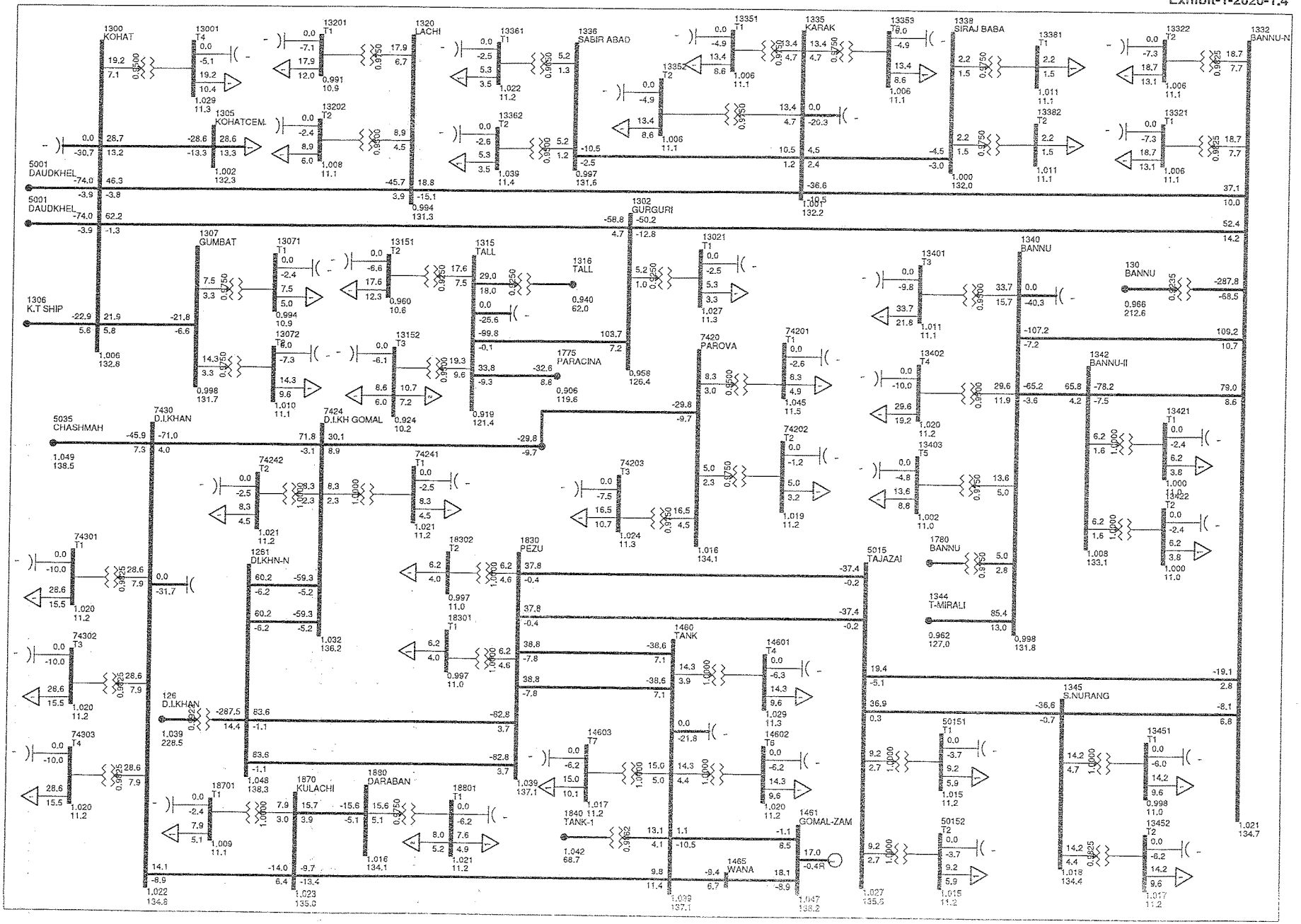

PESCO LOAD FLOW STUDY FOR (DIIP) FIVE YEAR PLAN
YEAR 2020: BASE CASE

Exhibit-1-2020-1.5

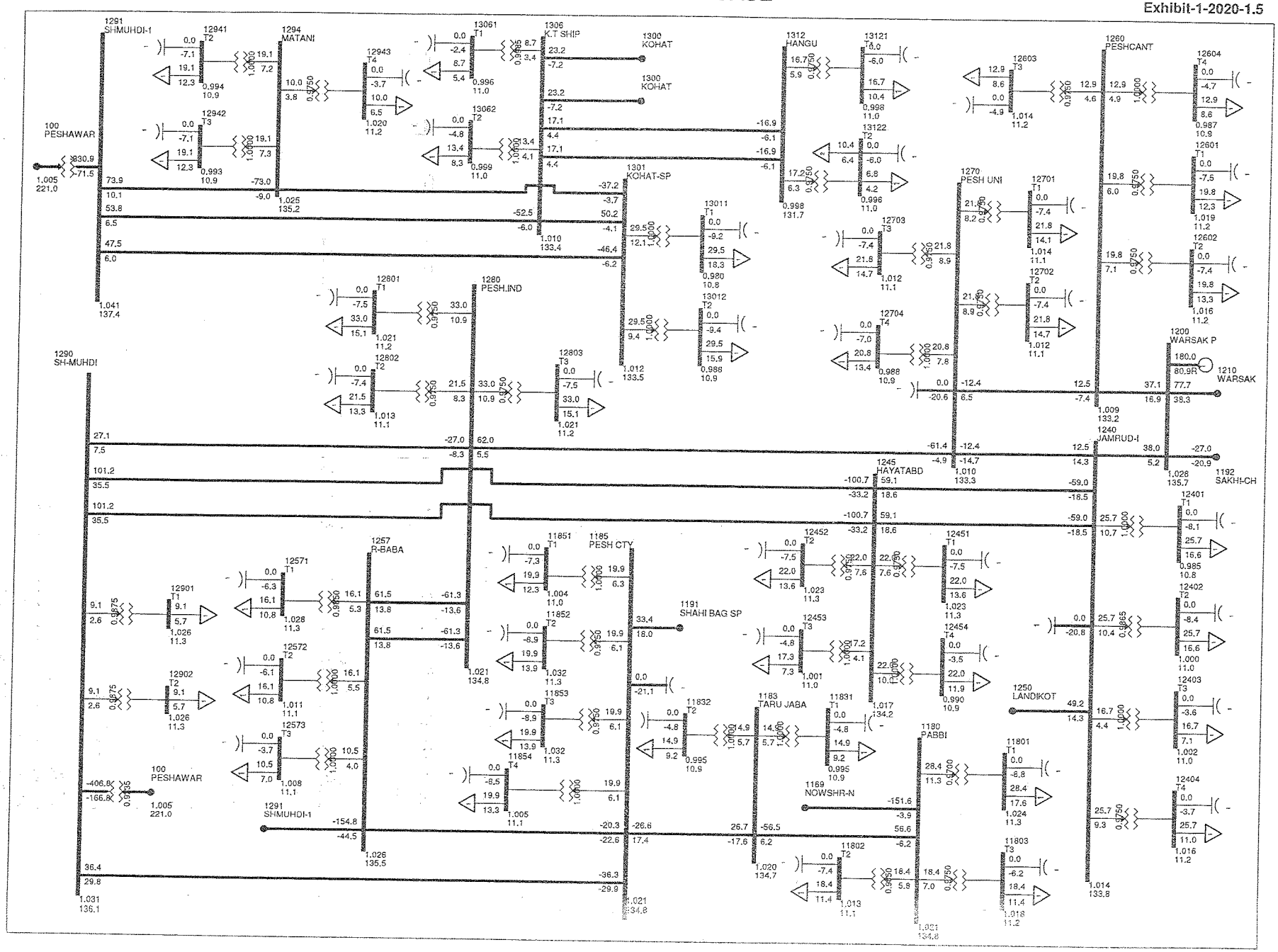

PESCO LOAD FLOW STUDY FOR (DIIP) FIVE YEAR PLAN
YEAR 2020: BASE CASE

Exhibit-1-2020-1.6

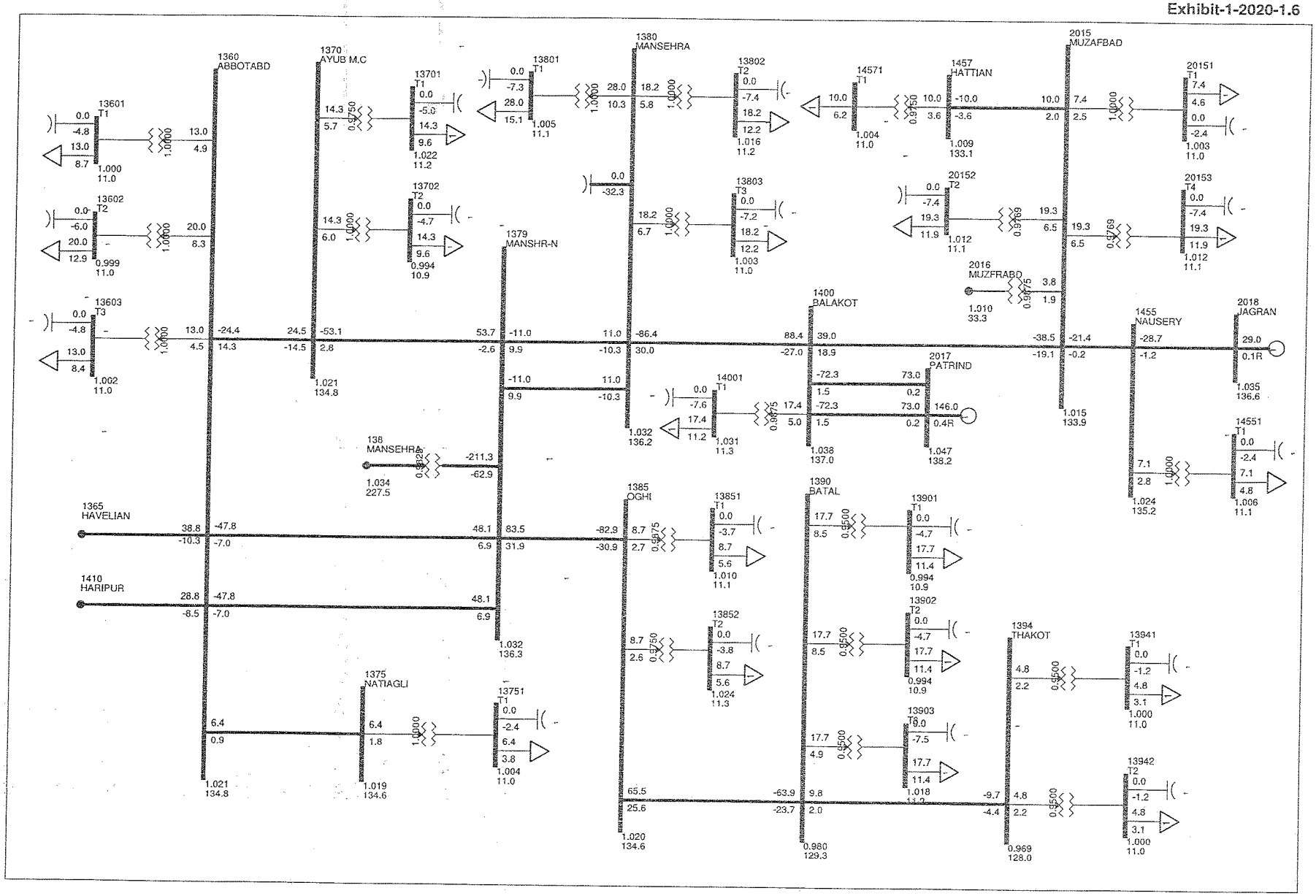

PESCO LOAD FLOW STUDY FOR (DIIP) FIVE YEAR PLAN
YEAR 2020: BASE CASE

Exhibit-1-2020-1.7

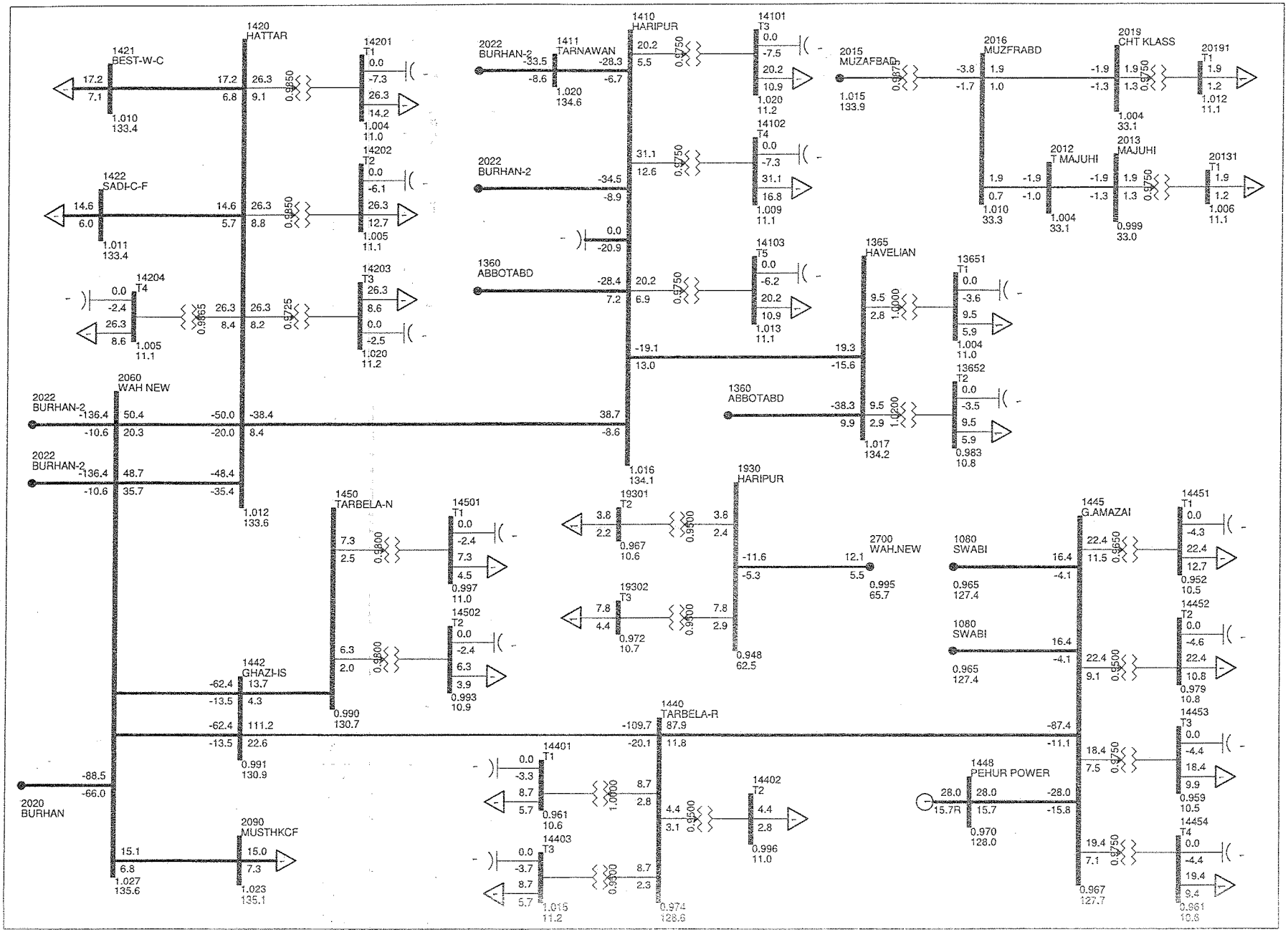

PESCO LOAD FLOW STUDY FOR (DIIP) FIVE YEAR PLAN
YEAR 2020: BASE CASE

Exhibit-1-2020-1.8

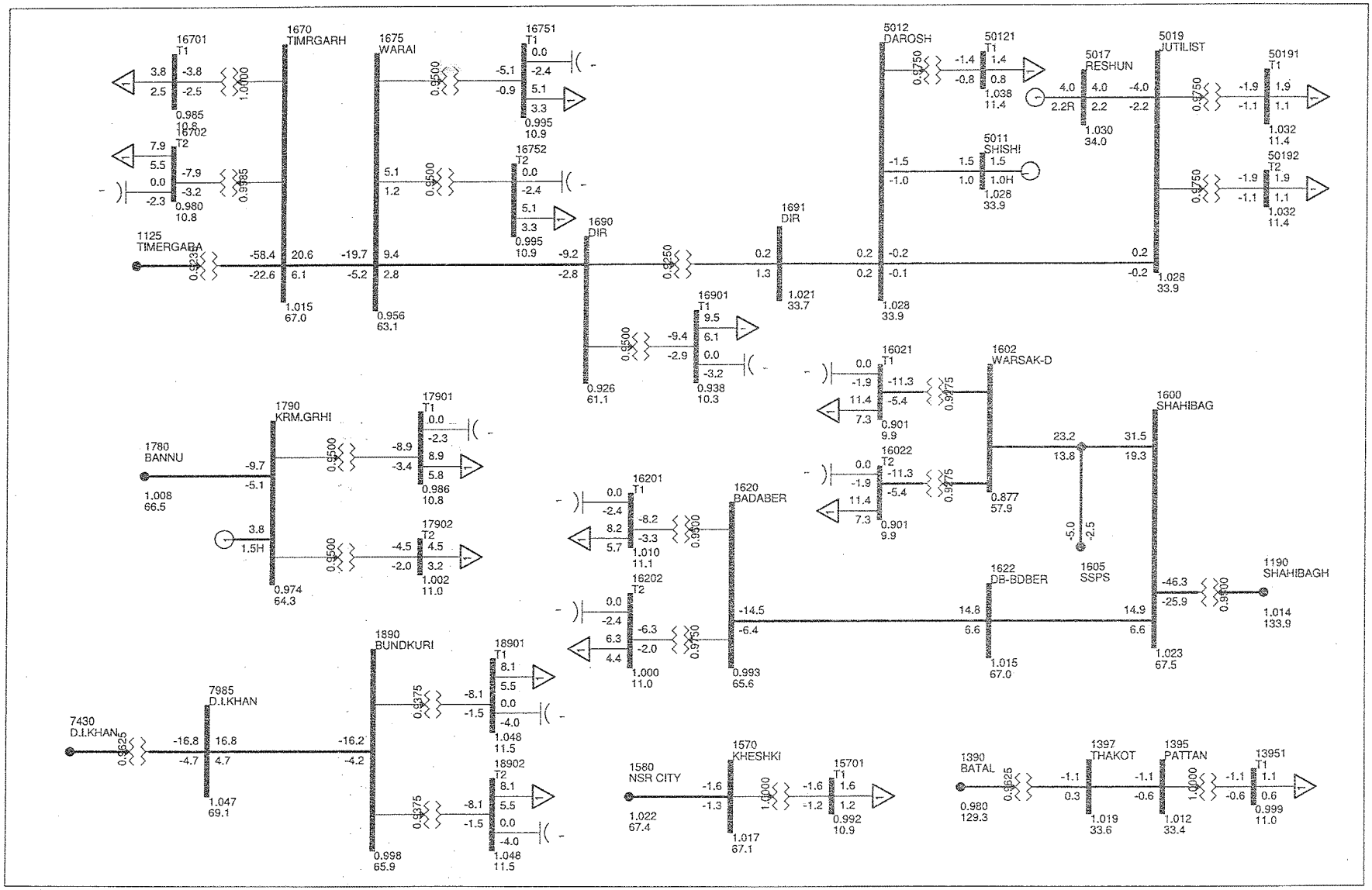

PESCO LOAD FLOW STUDY FOR (DIIP) FIVE YEAR PLAN
YEAR 2020: BASE CASE WITH REINFORCEMENT

Exhibit-1-2020-2.1

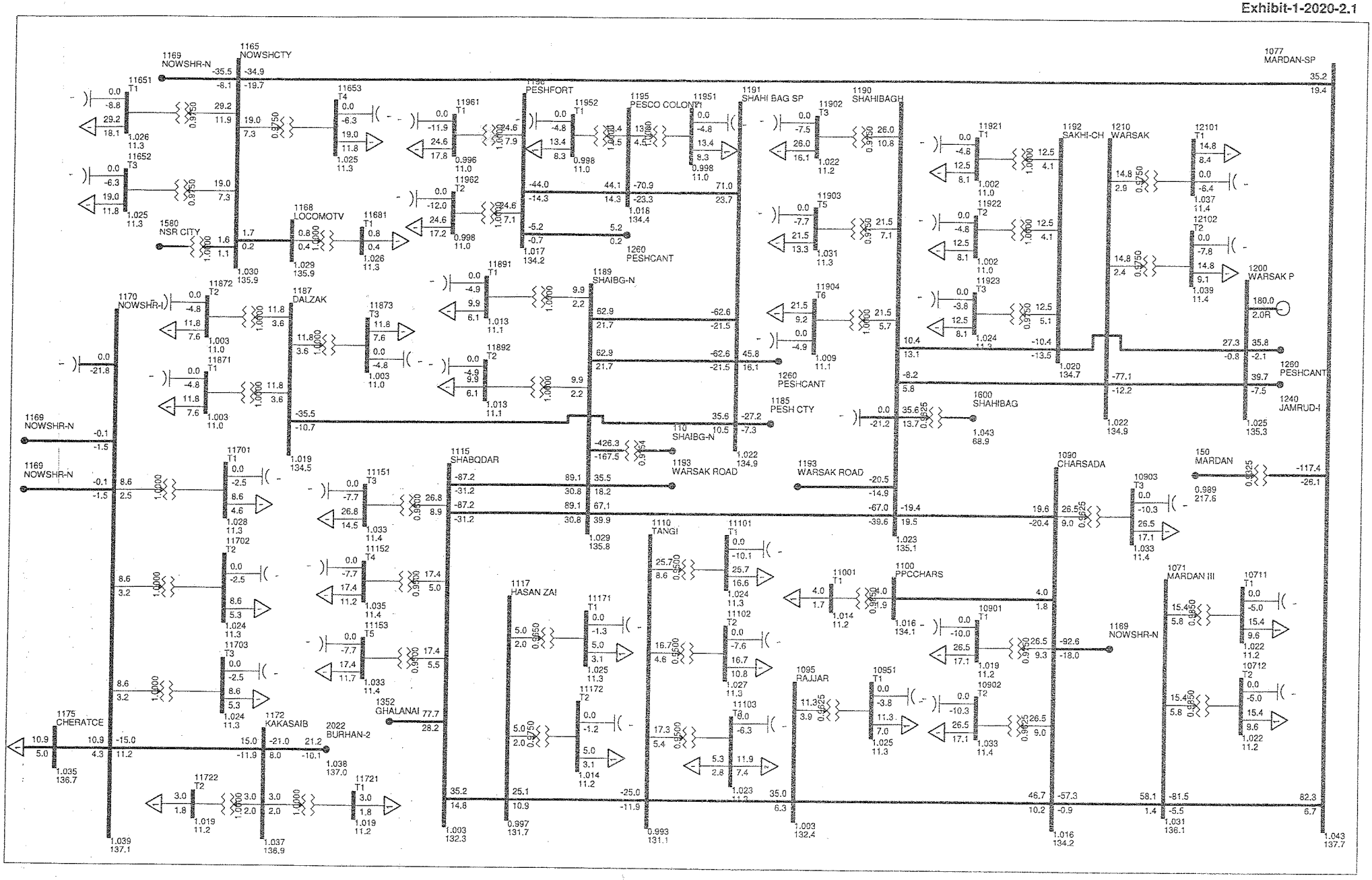

PESCO LOAD FLOW STUDY FOR (DIIP) FIVE YEAR PLAN
YEAR 2020: BASE CASE WITH REINFORCEMENT

Exhibit-1-2020-2.2

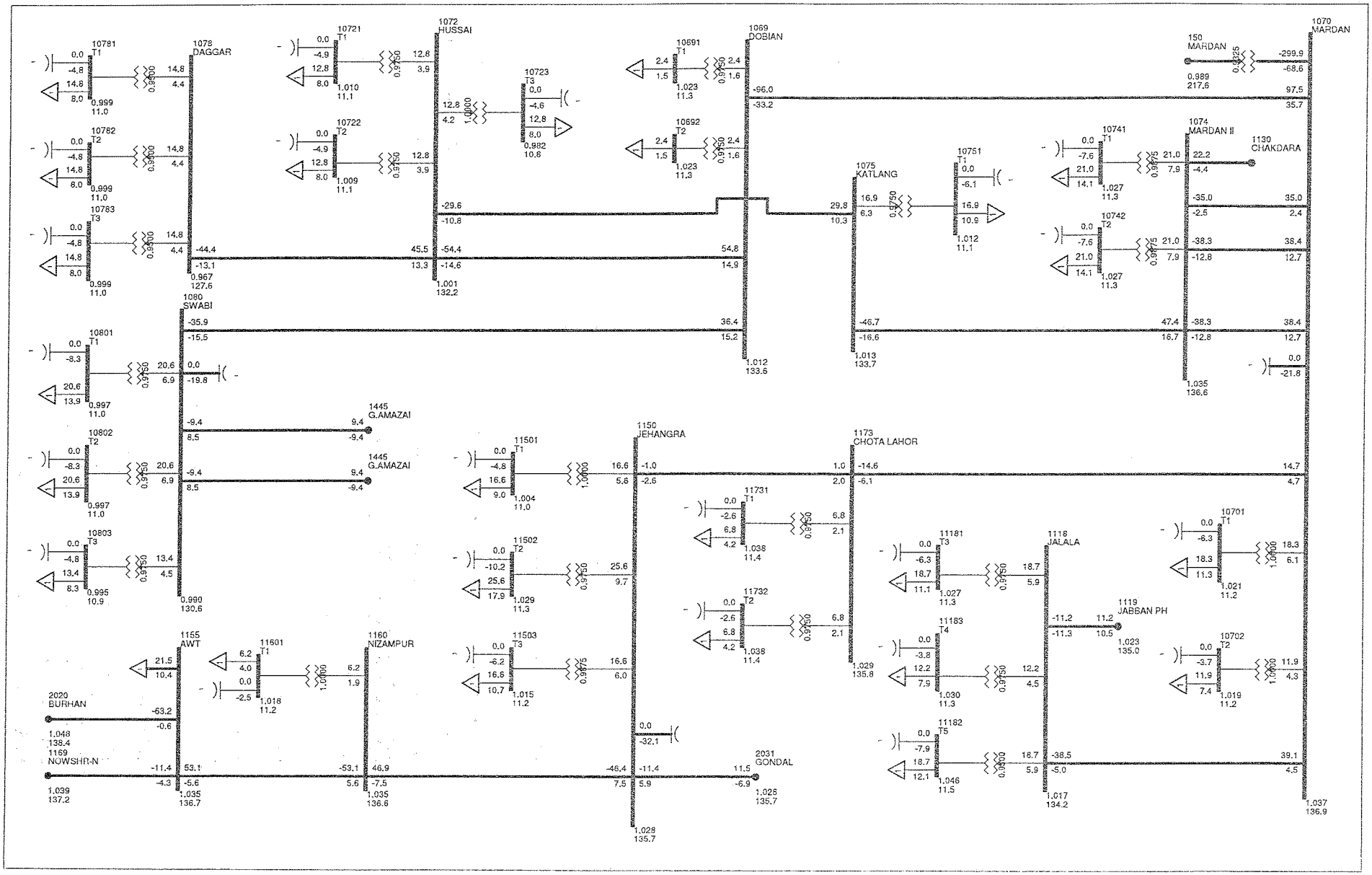

PESCO LOAD FLOW STUDY FOR (DIIP) FIVE YEAR PLAN
YEAR 2020: BASE CASE WITH REINFORCEMENT

Exhibit-1-2020-2.3

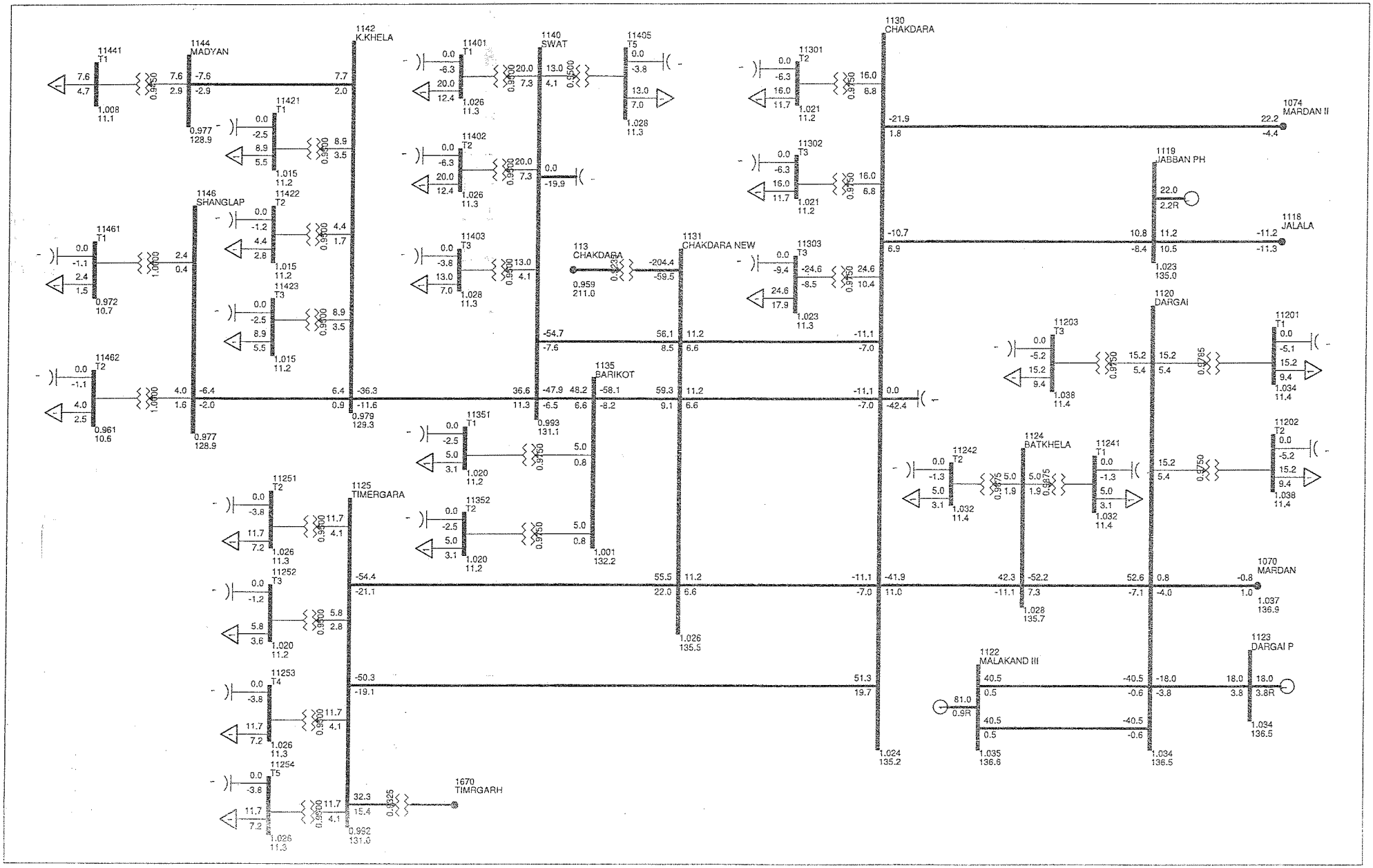

PESCO LOAD FLOW STUDY FOR (DIIP) FIVE YEAR PLAN
YEAR 2020: BASE CASE WITH REINFORCEMENT

Exhibit-1-2020-2.4

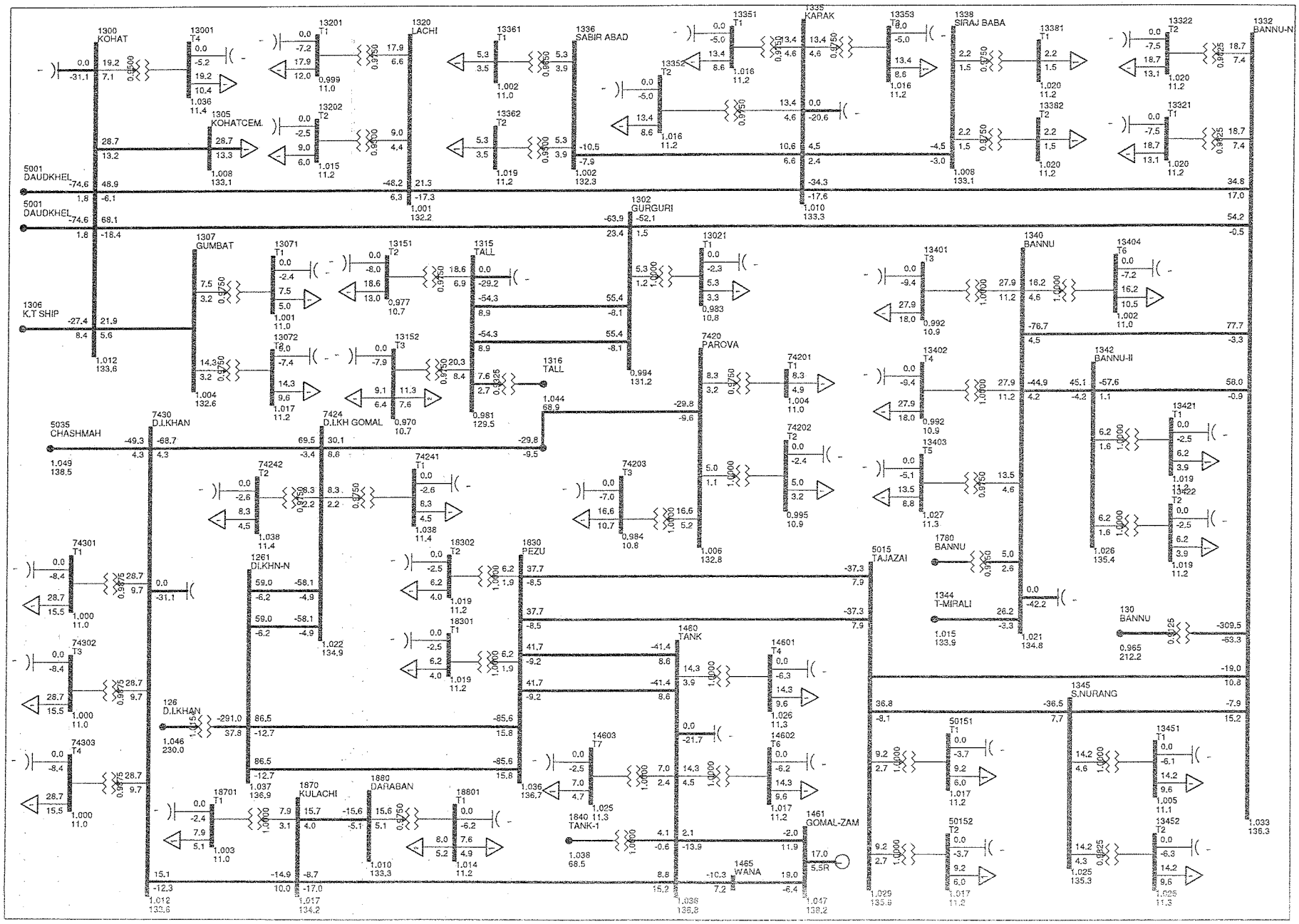

PESCO LOAD FLOW STUDY FOR (DIIP) FIVE YEAR PLAN
YEAR 2020: BASE CASE WITH REINFORCEMENT

Exhibit-1-2020-2.5

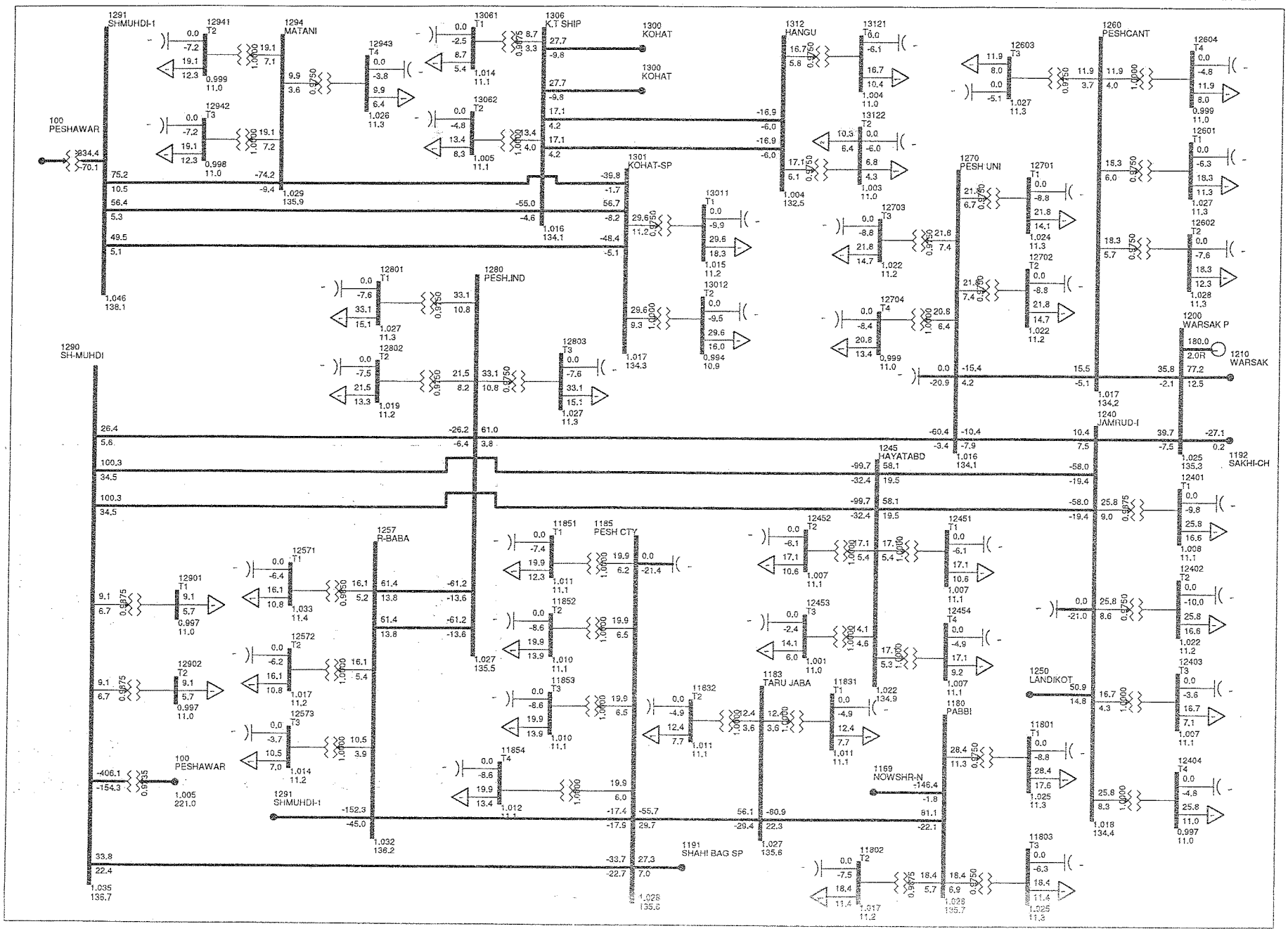

PESCO LOAD FLOW STUDY FOR (DIIP) FIVE YEAR PLAN
YEAR 2020: BASE CASE WITH REINFORCEMENT

Exhibit-1-2020-2.6

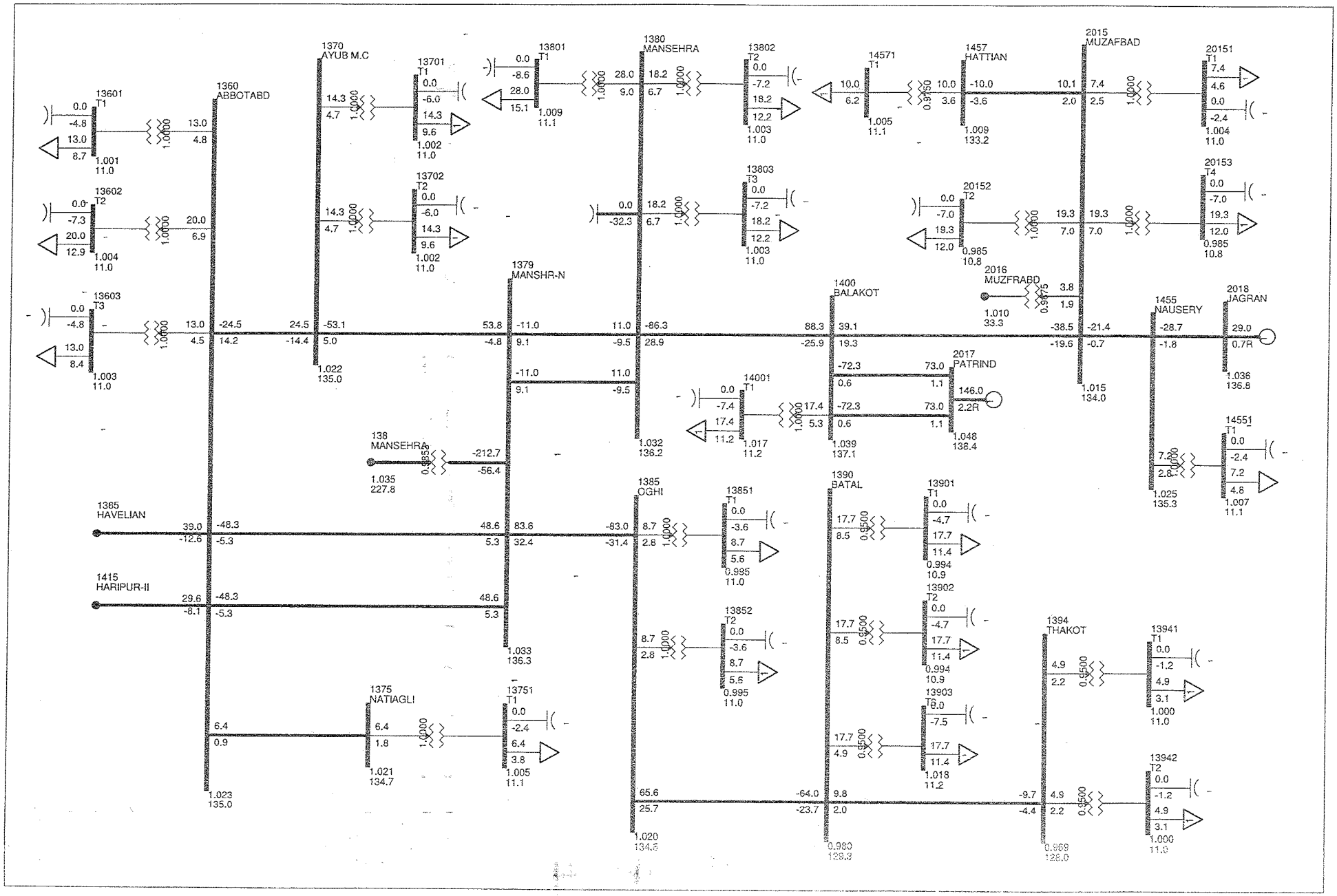

PESCO LOAD FLOW STUDY FOR (DIIP) FIVE YEAR PLAN
YEAR 2020: BASE CASE WITH REINFORCEMENT

Exhibit-1-2020-2.7

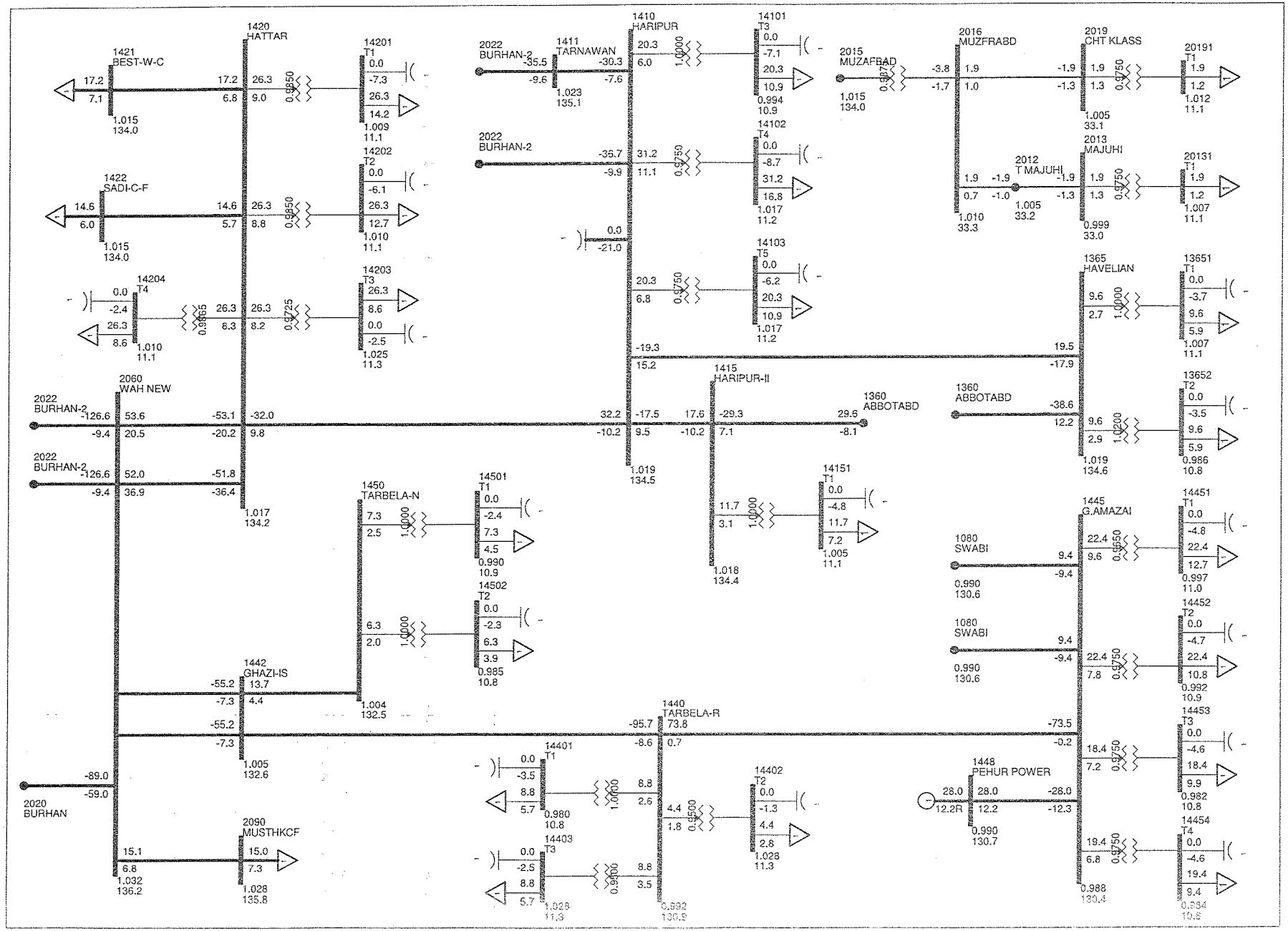

PESCO LOAD FLOW STUDY FOR (DIIP) FIVE YEAR PLAN
YEAR 2020: BASE CASE WITH REINFORCEMENT

Exhibit-1-2020-2.8

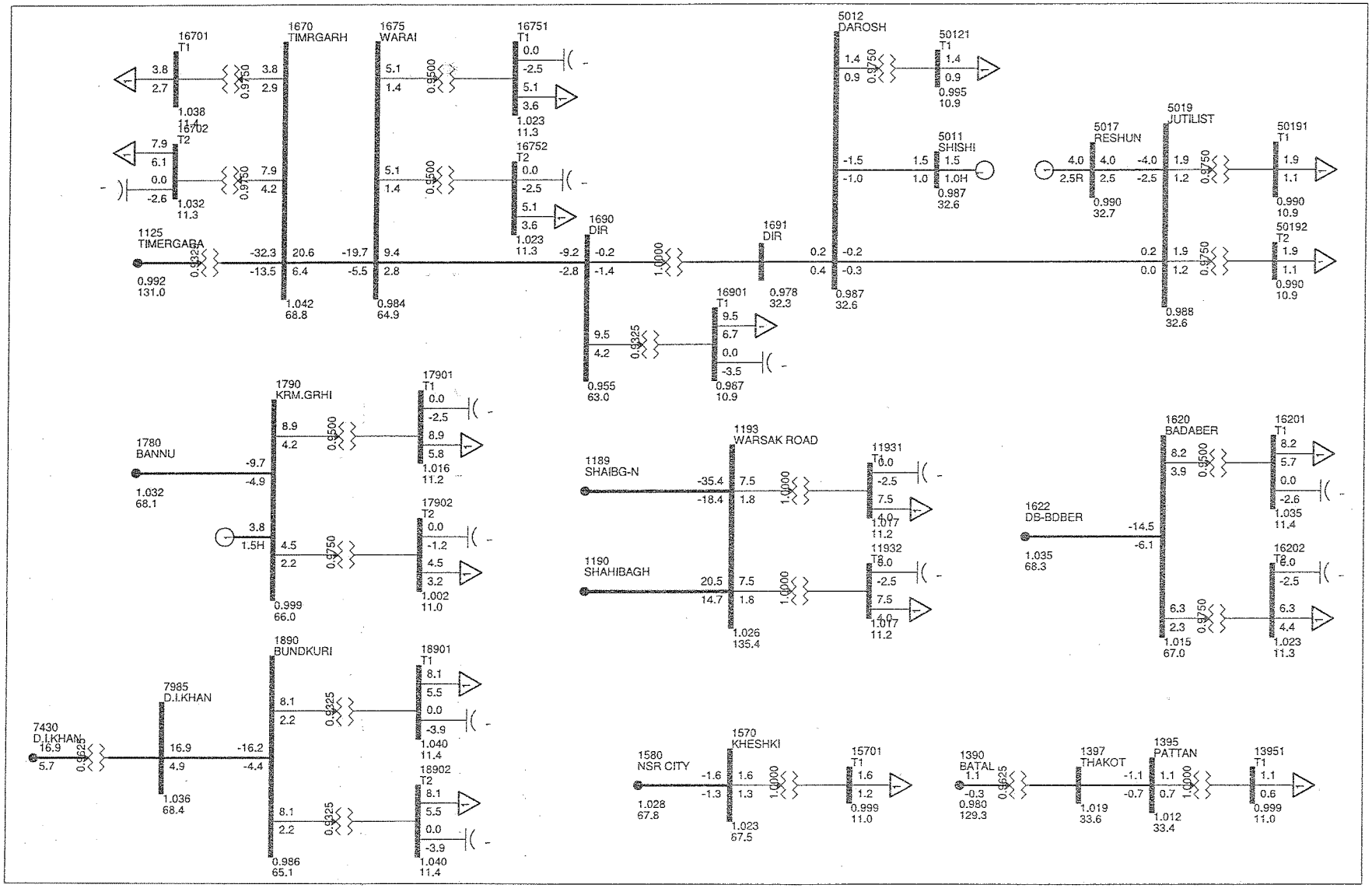

PESCO LOAD FLOW STUDY FOR (DIIP) FIVE YEAR PLAN
YEAR 2021: BASE CASE

Exhibit-1-2021-1.1

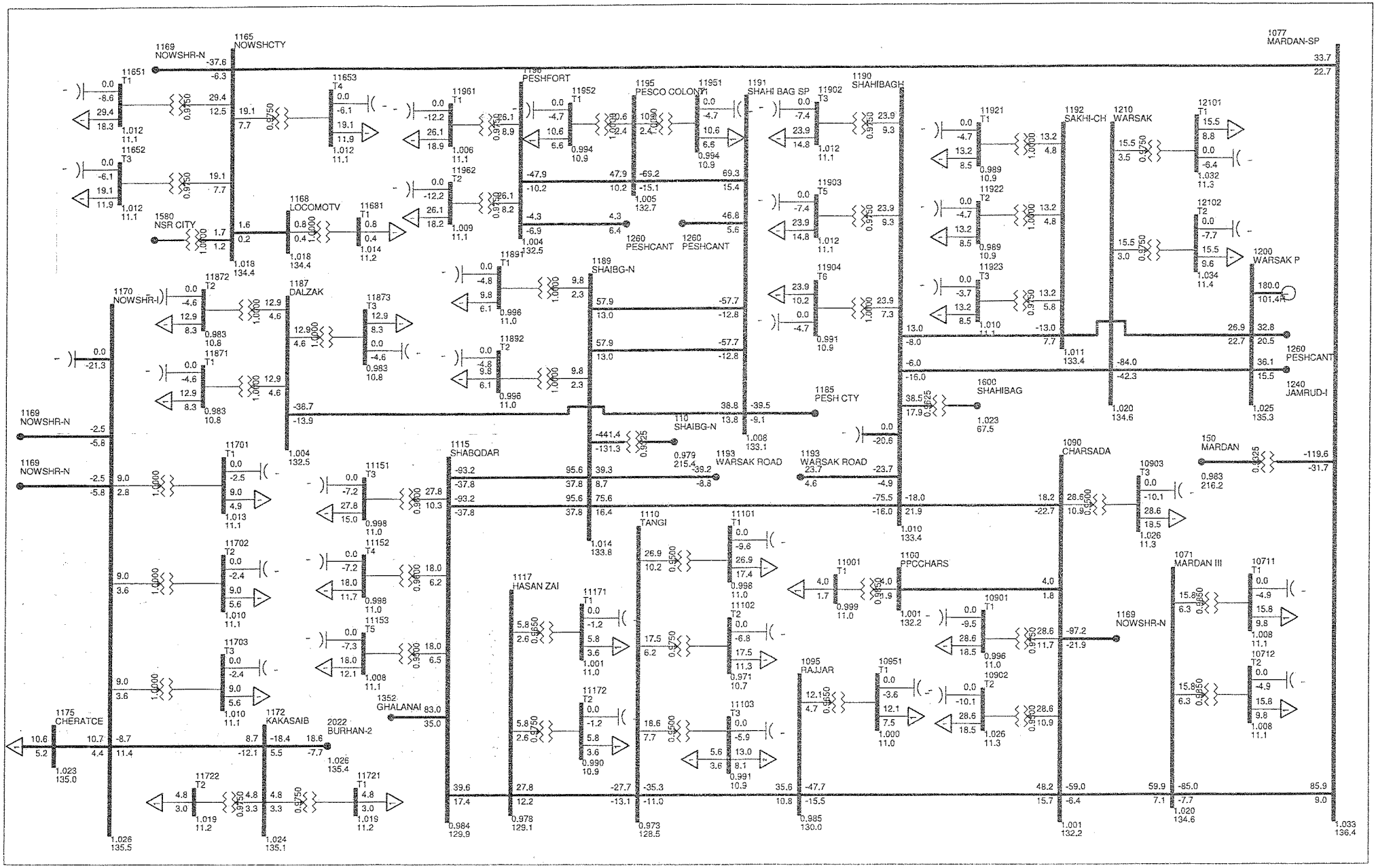

PESCO LOAD FLOW STUDY FOR (DIIP) FIVE YEAR PLAN
YEAR 2021: BASE CASE WITH REINFORCEMENT

Exhibit-1-2021-1.2

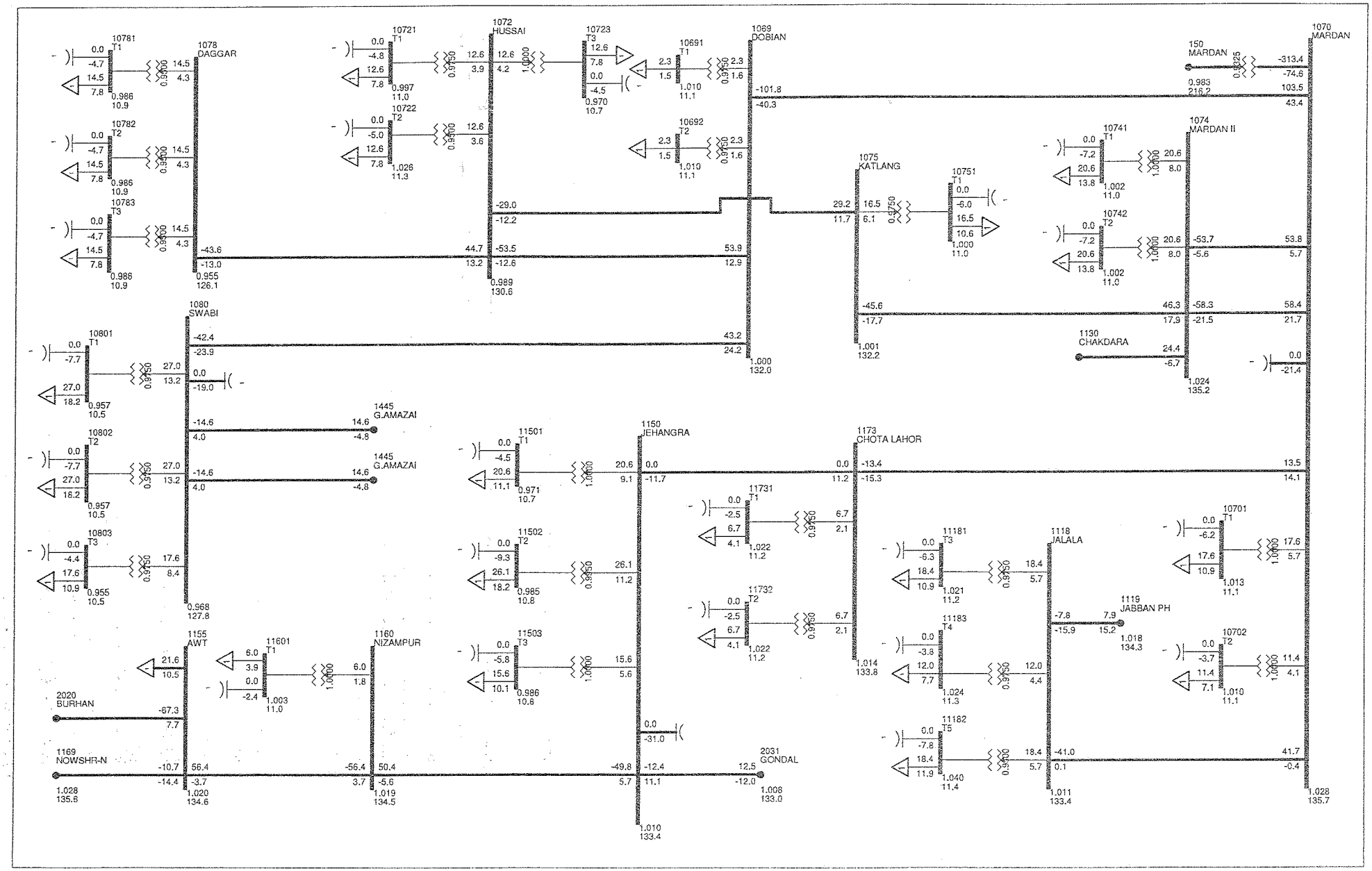

PESCO LOAD FLOW STUDY FOR (DIIP) FIVE YEAR PLAN
YEAR 2021: BASE CASE

Exhibit-1-2021-1.3

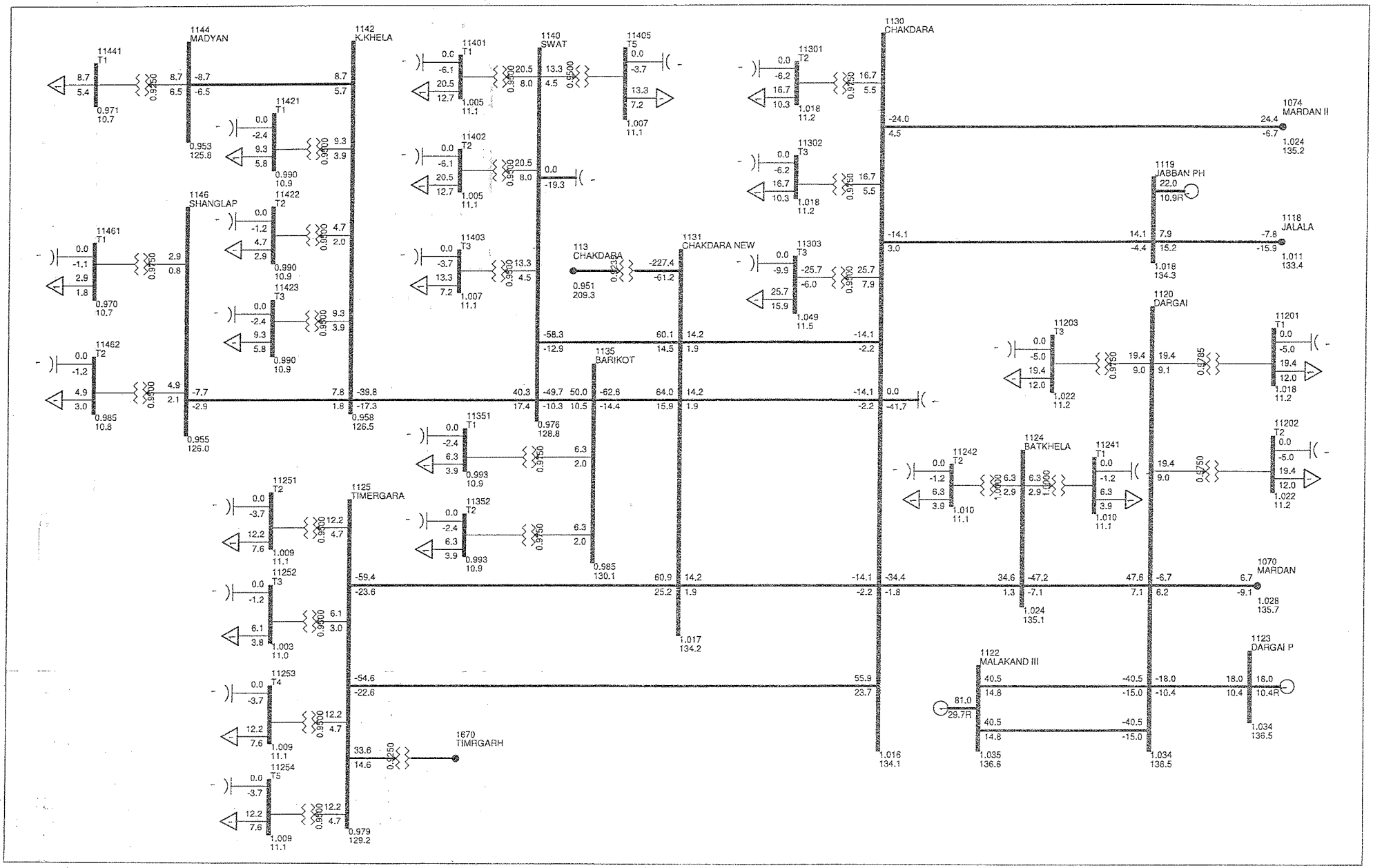

PESCO LOAD FLOW STUDY FOR (DIIP) FIVE YEAR PLAN
YEAR 2021: BASE CASE

Exhibit-1-2021-1.4

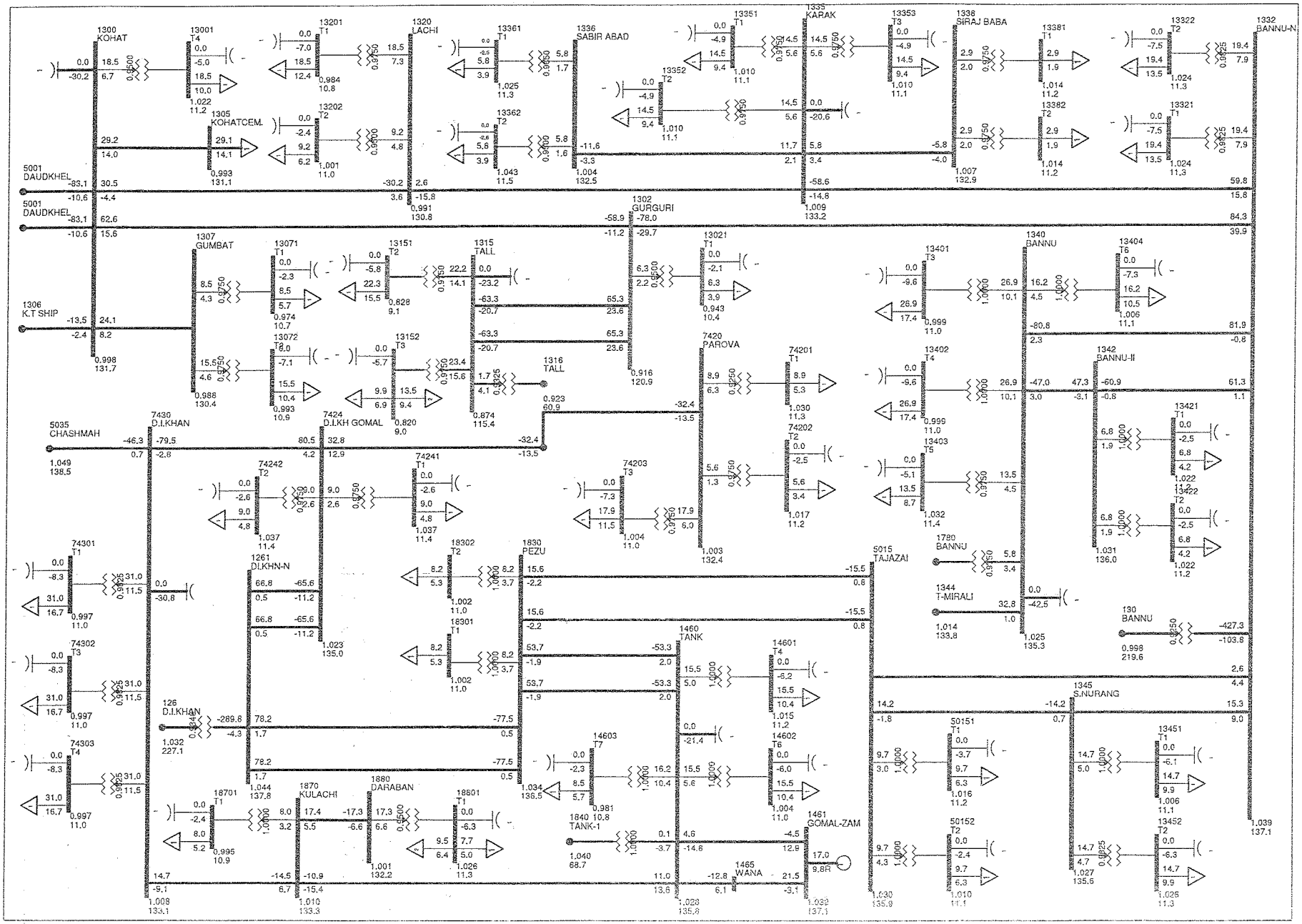

PESCO LOAD FLOW STUDY FOR (DIIP) FIVE YEAR PLAN
YEAR 2021: BASE CASE

Exhibit-1-2021-1.5

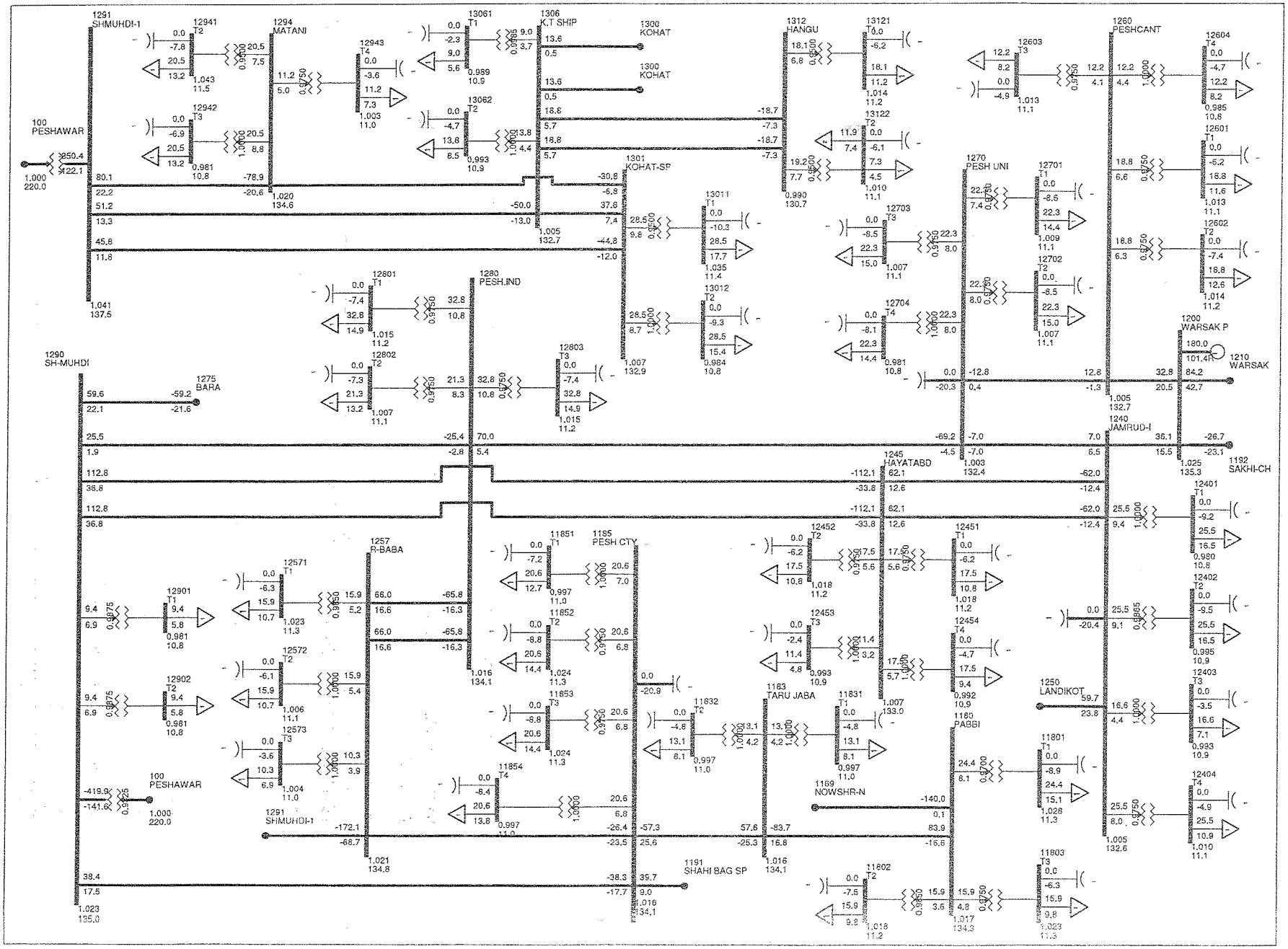

PESCO LOAD FLOW STUDY FOR (DIIP) FIVE YEAR PLAN
YEAR 2021: BASE CASE

Exhibit-1-2021-1.6

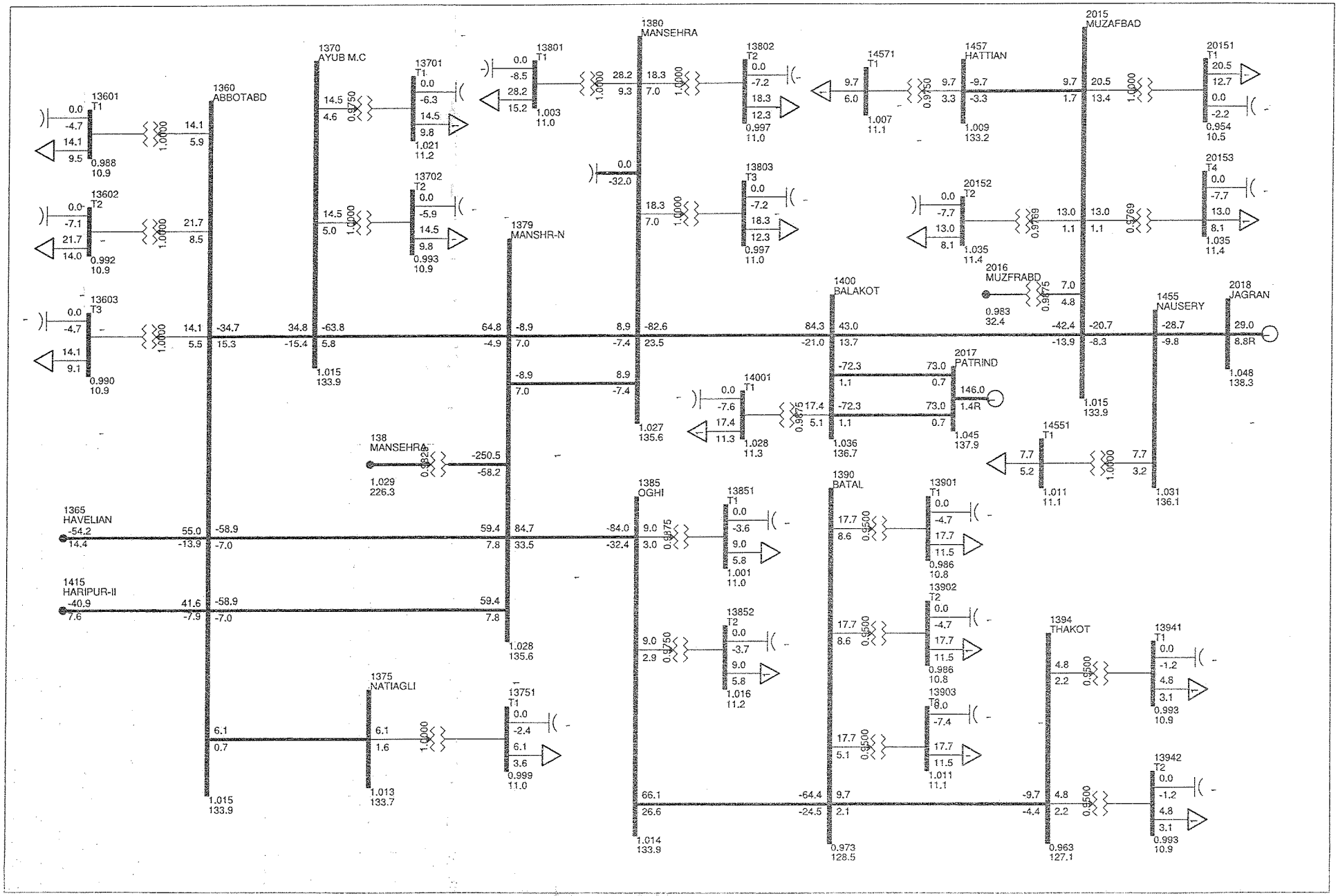

PESCO LOAD FLOW STUDY FOR (DIIP) FIVE YEAR PLAN
YEAR 2021: BASE CASE

Exhibit-1-2021-1.7

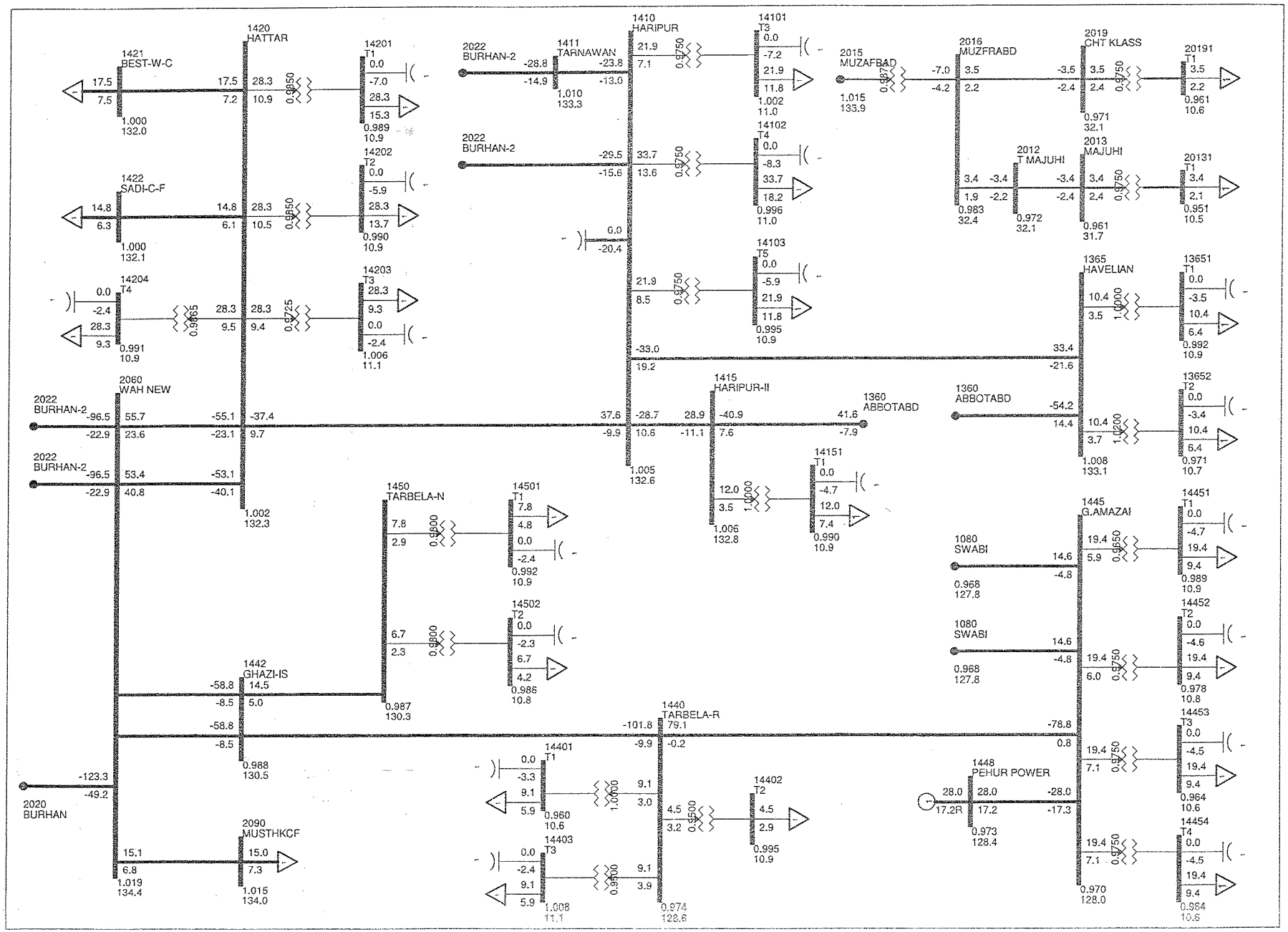

PESCO LOAD FLOW STUDY FOR (DIIP) FIVE YEAR PLAN
YEAR 2021: BASE CASE

Exhibit-1-2021-1.8

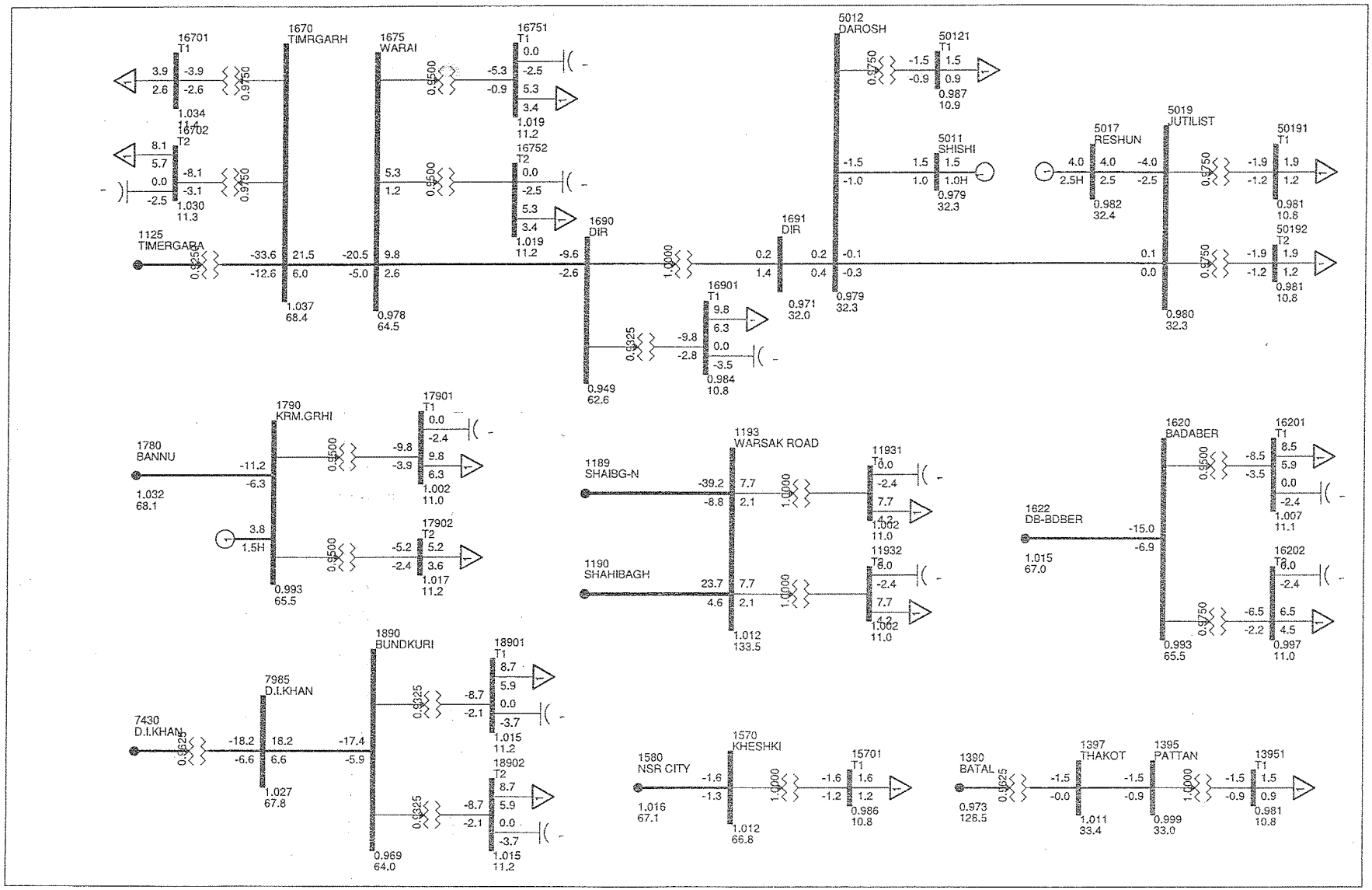

PESCO LOAD FLOW STUDY FOR (DIIP) FIVE YEAR PLAN
YEAR 2021: BASE CASE WITH REINFORCEMENT

Exhibit-1-2021-2.1

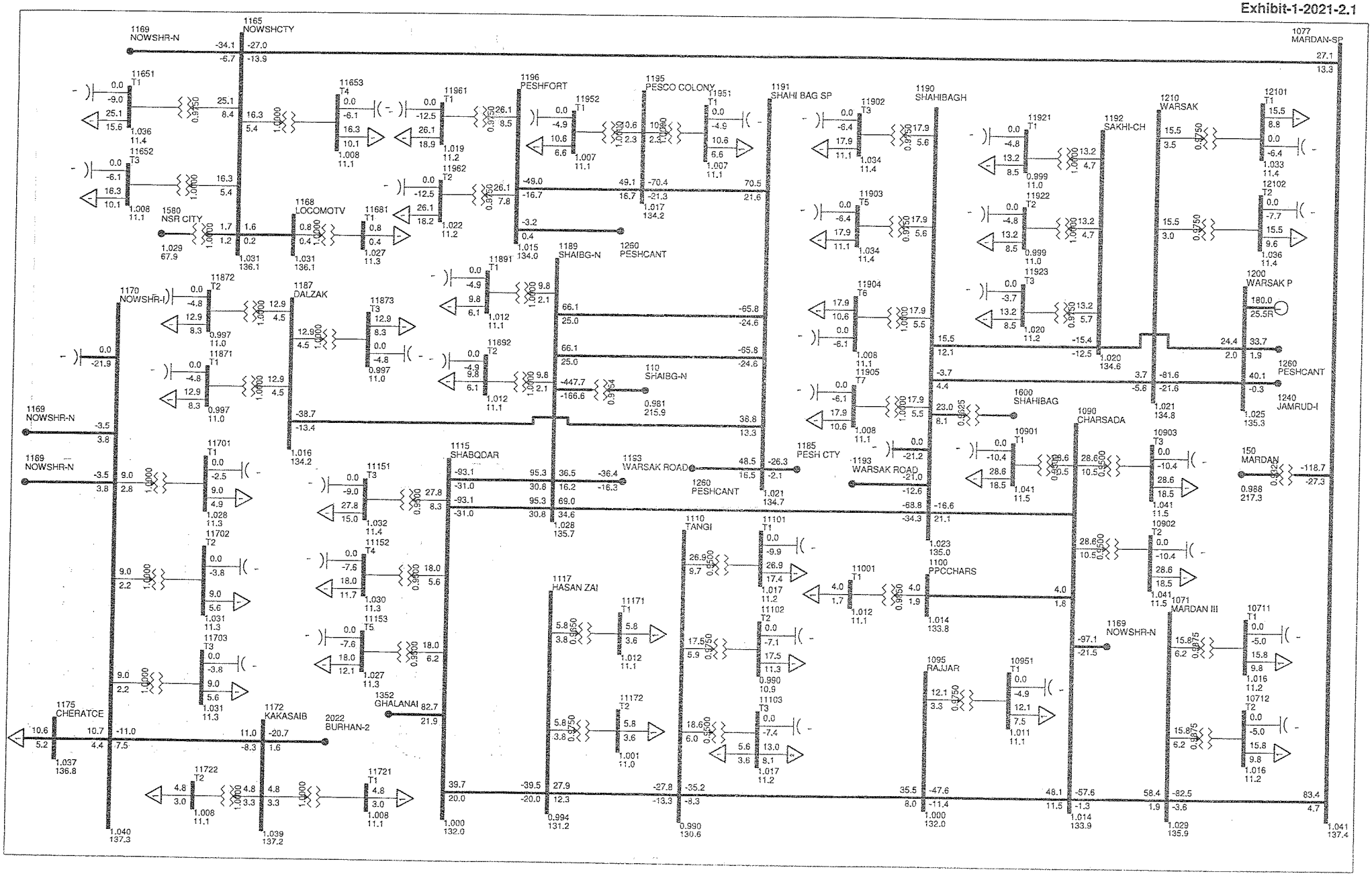

PESCO LOAD FLOW STUDY FOR (DIIP) FIVE YEAR PLAN
YEAR 2021: BASE CASE WITH REINFORCEMENT

Exhibit-1-2021-2.2

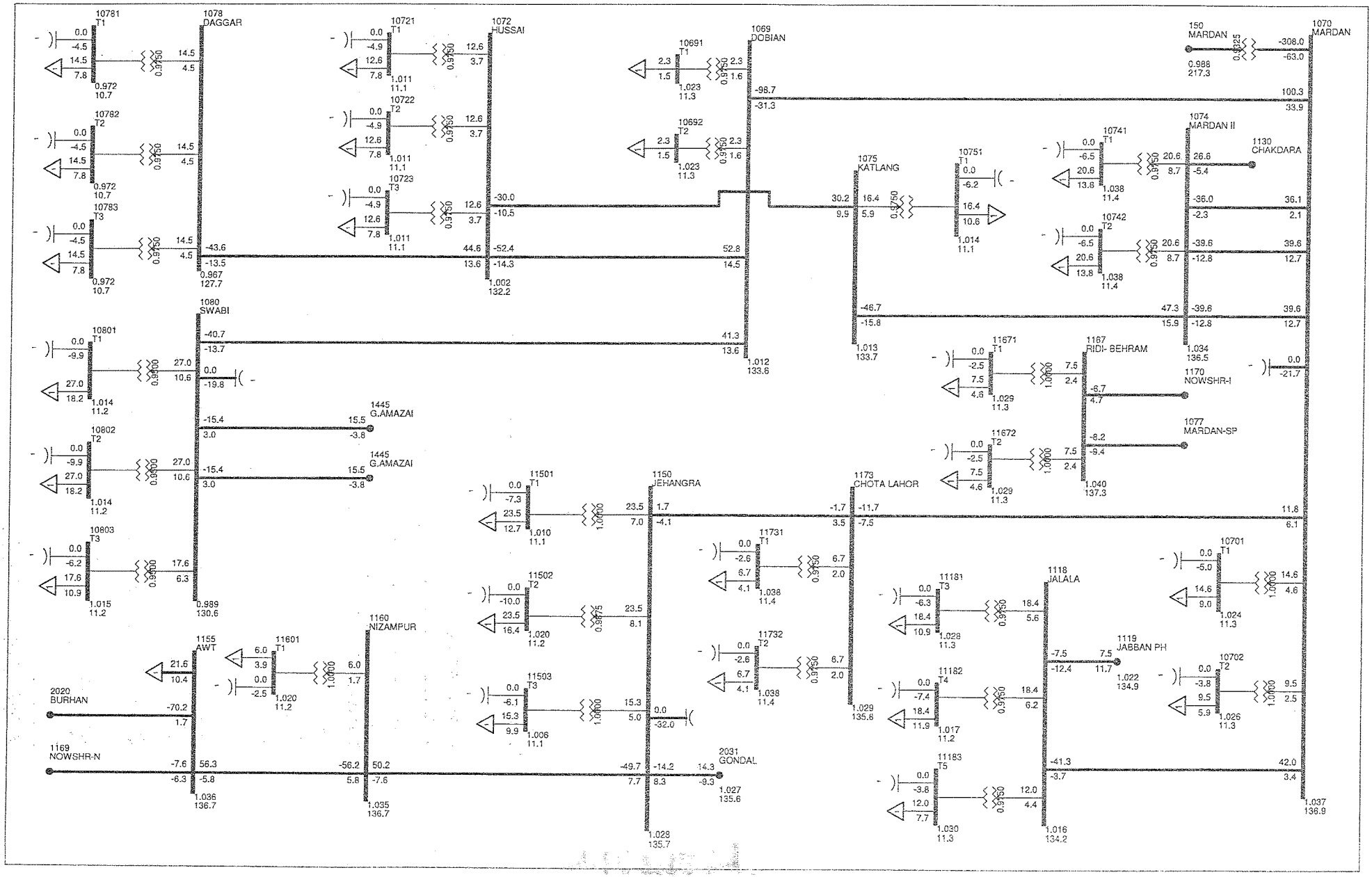

PESCO LOAD FLOW STUDY FOR (DIIP) FIVE YEAR PLAN
YEAR 2021: BASE CASE WITH REINFORCEMENT

Exhibit-1-2021-2.3

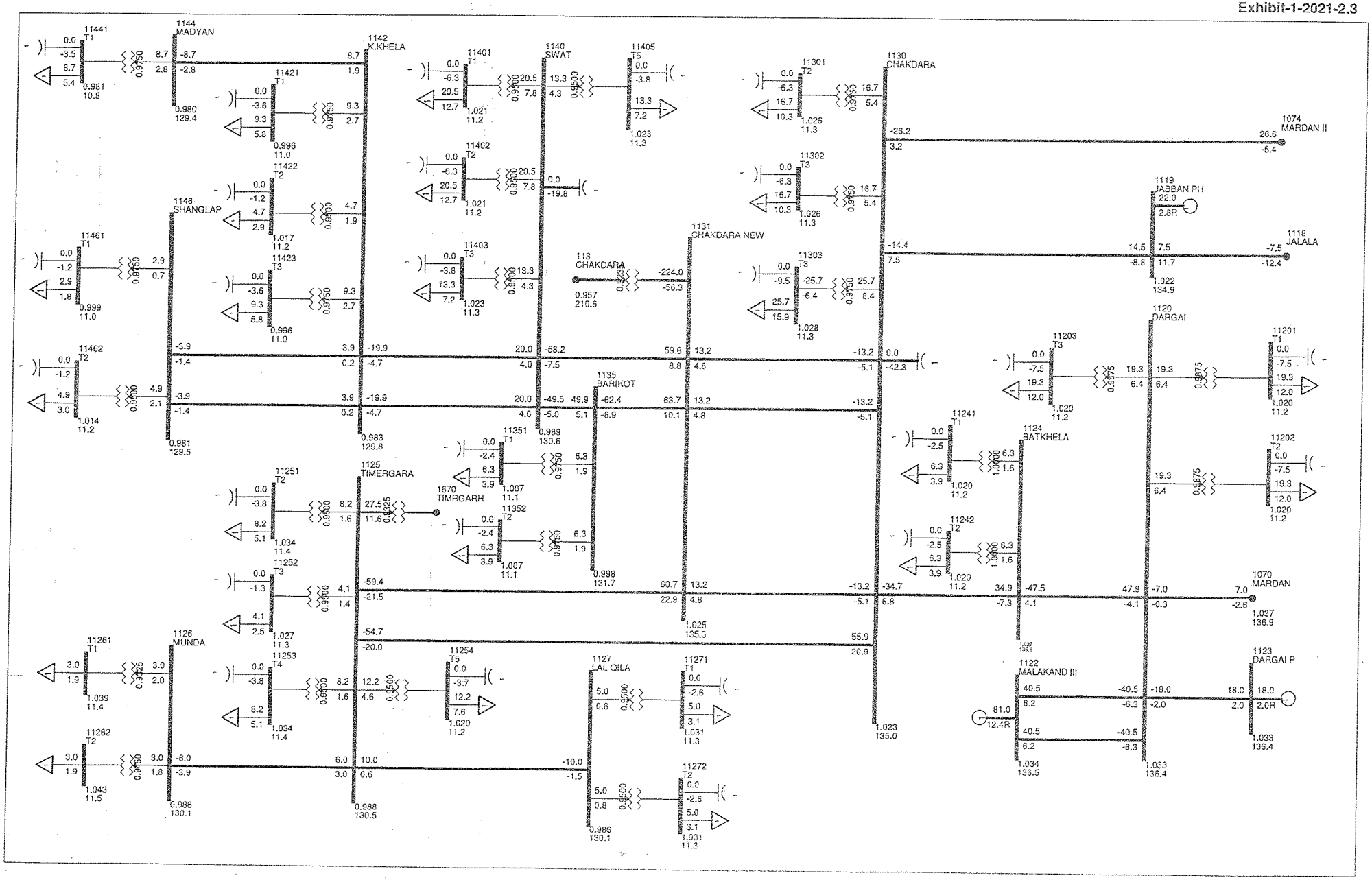

PESCO LOAD FLOW STUDY FOR (DIIP) FIVE YEAR PLAN
YEAR 2021: BASE CASE WITH REINFORCEMENT

Exhibit-1-2021-2.4

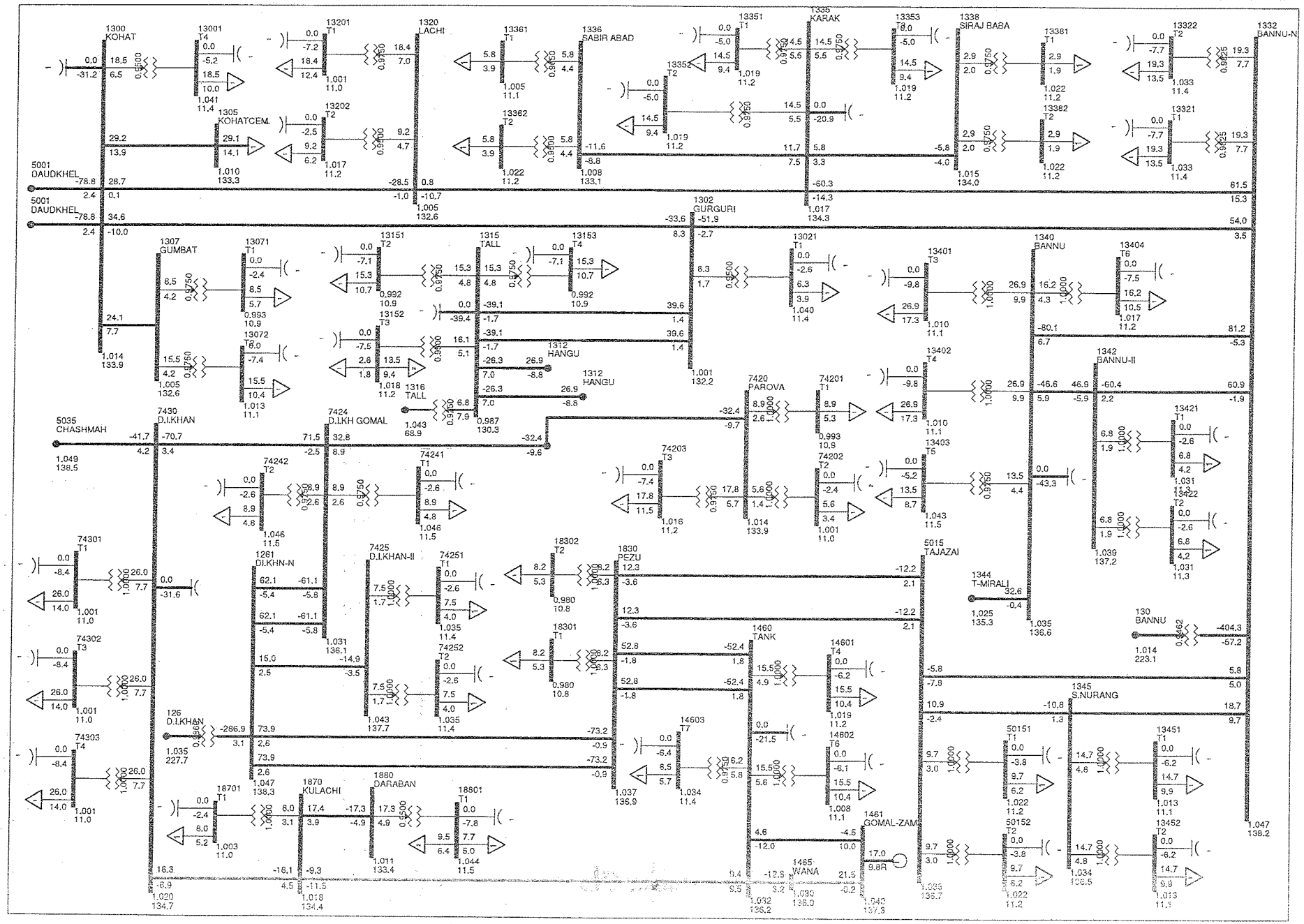

PESCO LOAD FLOW STUDY FOR (DIIP) FIVE YEAR PLAN
YEAR 2021: BASE CASE WITH REINFORCEMENT

Exhibit-1-2021-2.5

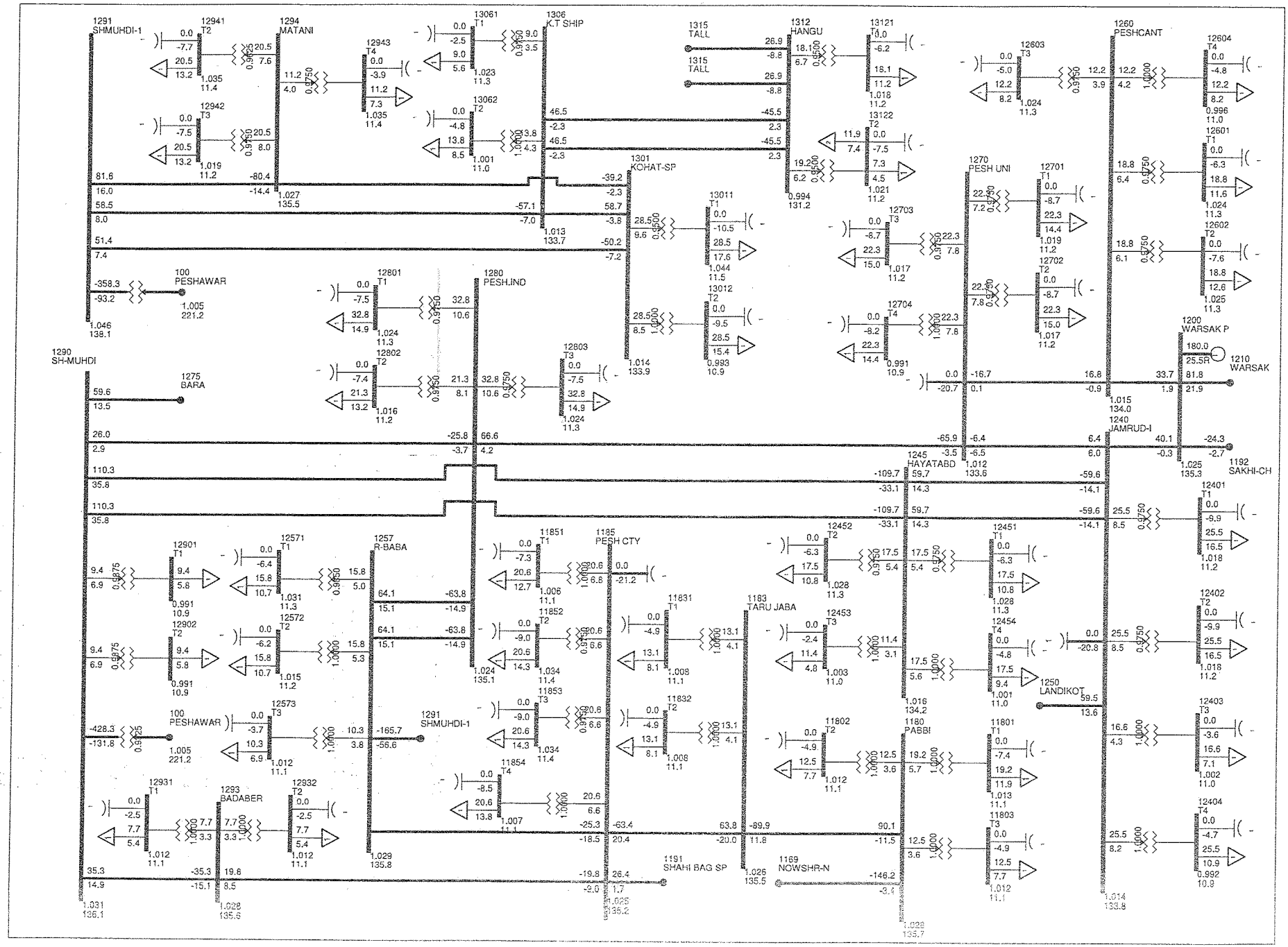

PESCO LOAD FLOW STUDY FOR (DIIP) FIVE YEAR PLAN
YEAR 2021: BASE CASE WITH REINFORCEMENT

Exhibit-1-2021-2.6

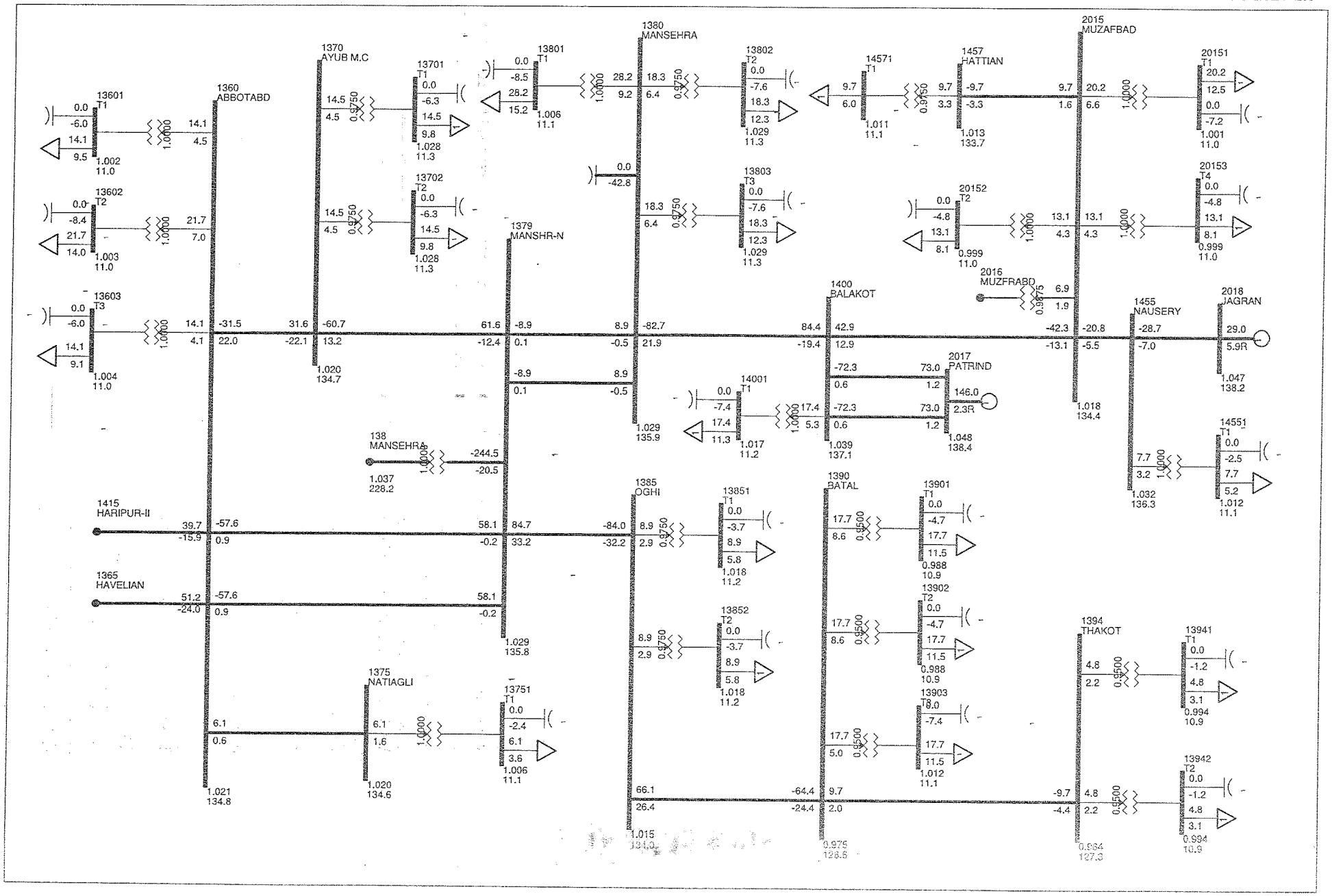

PESCO LOAD FLOW STUDY FOR (DIIP) FIVE YEAR PLAN
YEAR 2021: BASE CASE WITH REINFORCEMENT

Exhibit-1-2021-2.7

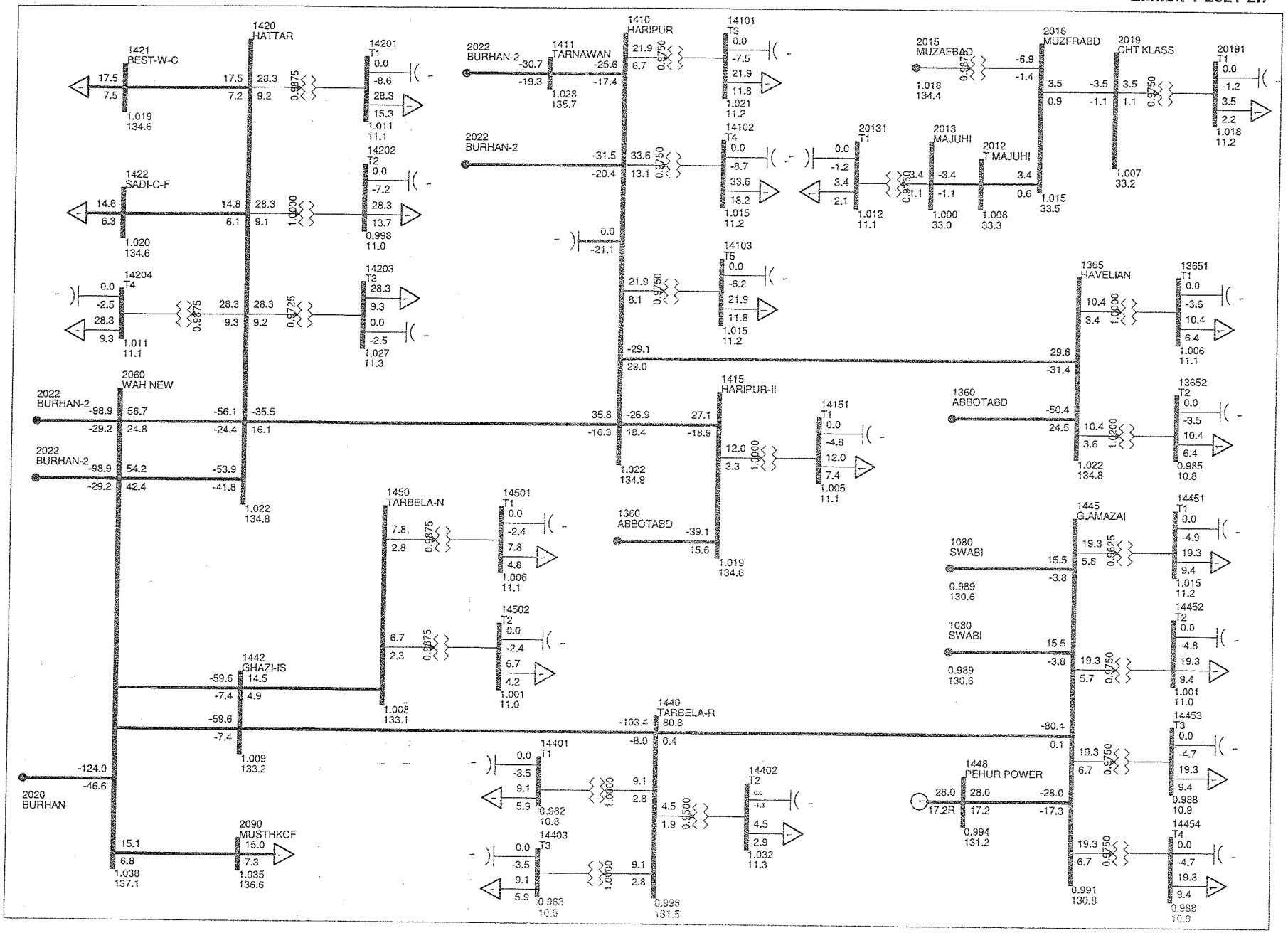

PESCO LOAD FLOW STUDY FOR (DIIP) FIVE YEAR PLAN
YEAR 2021: BASE CASE WITH REINFORCEMENT

Exhibit-1-2021-2.8

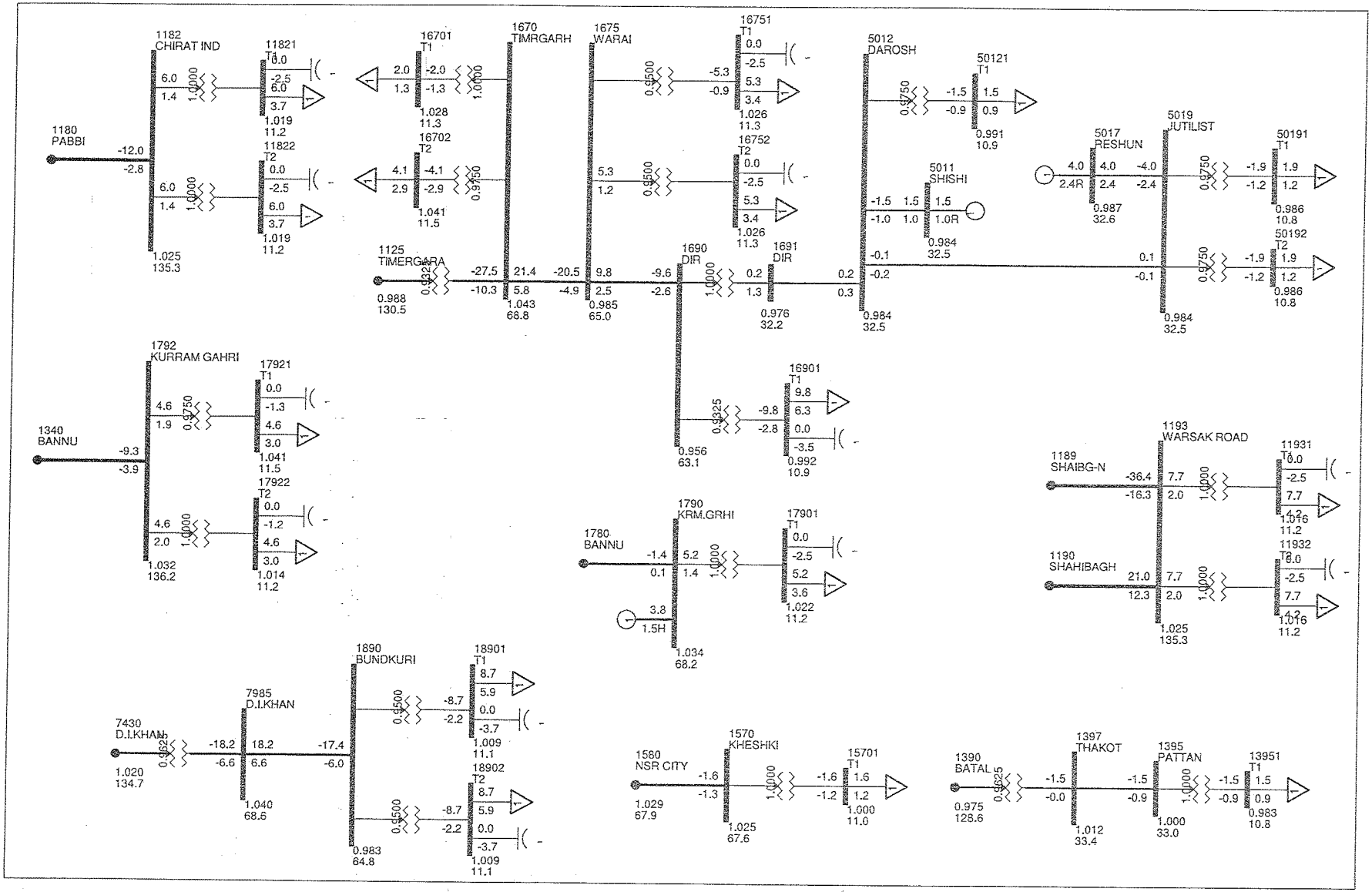

PESCO LOAD FLOW STUDY FOR (DIIP) FIVE YEAR PLAN
YEAR 2022: BASE CASE

Exhibit-1-2022-1.1

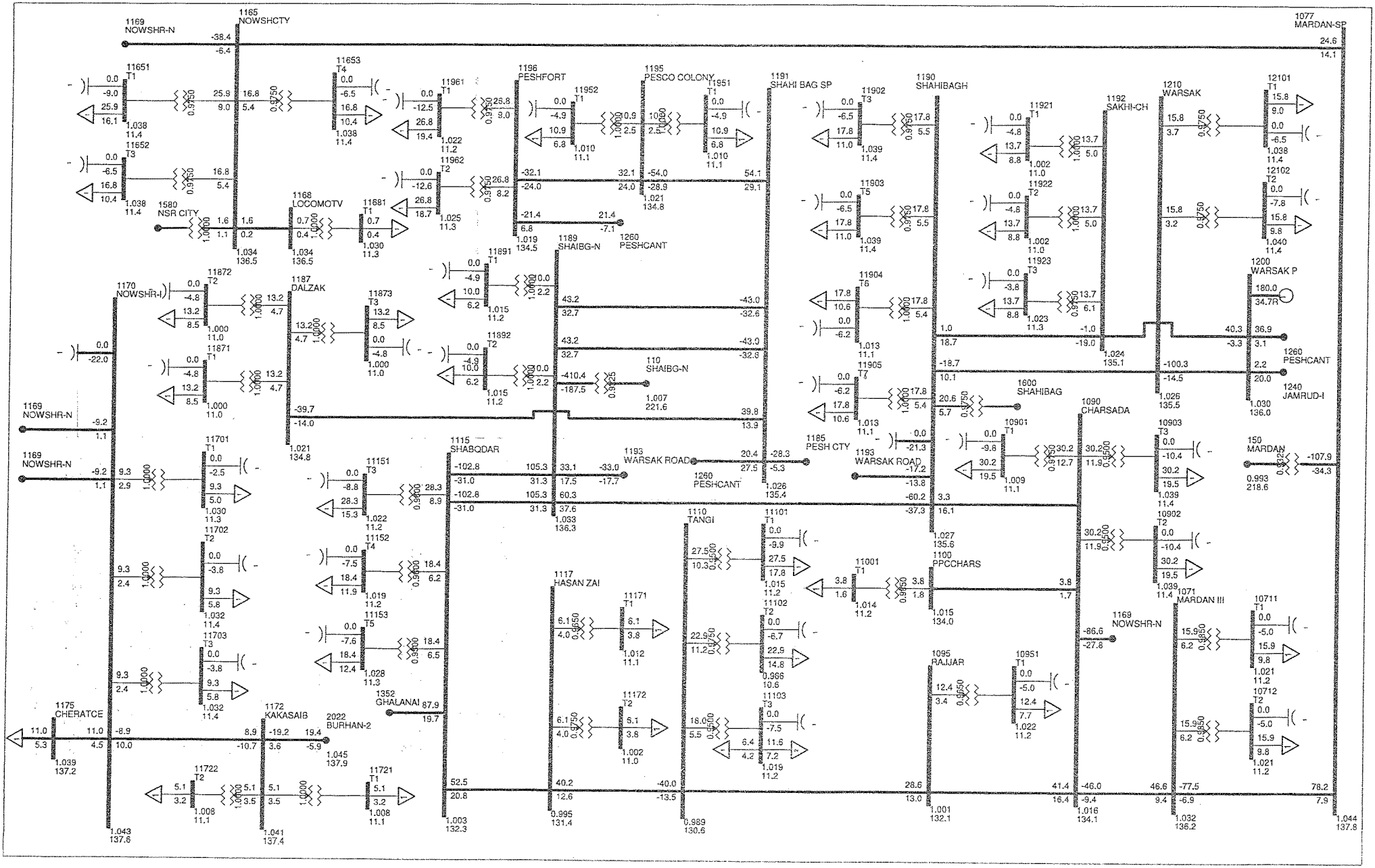

PESCO LOAD FLOW STUDY FOR (DIIP) FIVE YEAR PLAN
YEAR 2022: BASE CASE

Exhibit-1-2022-1.2

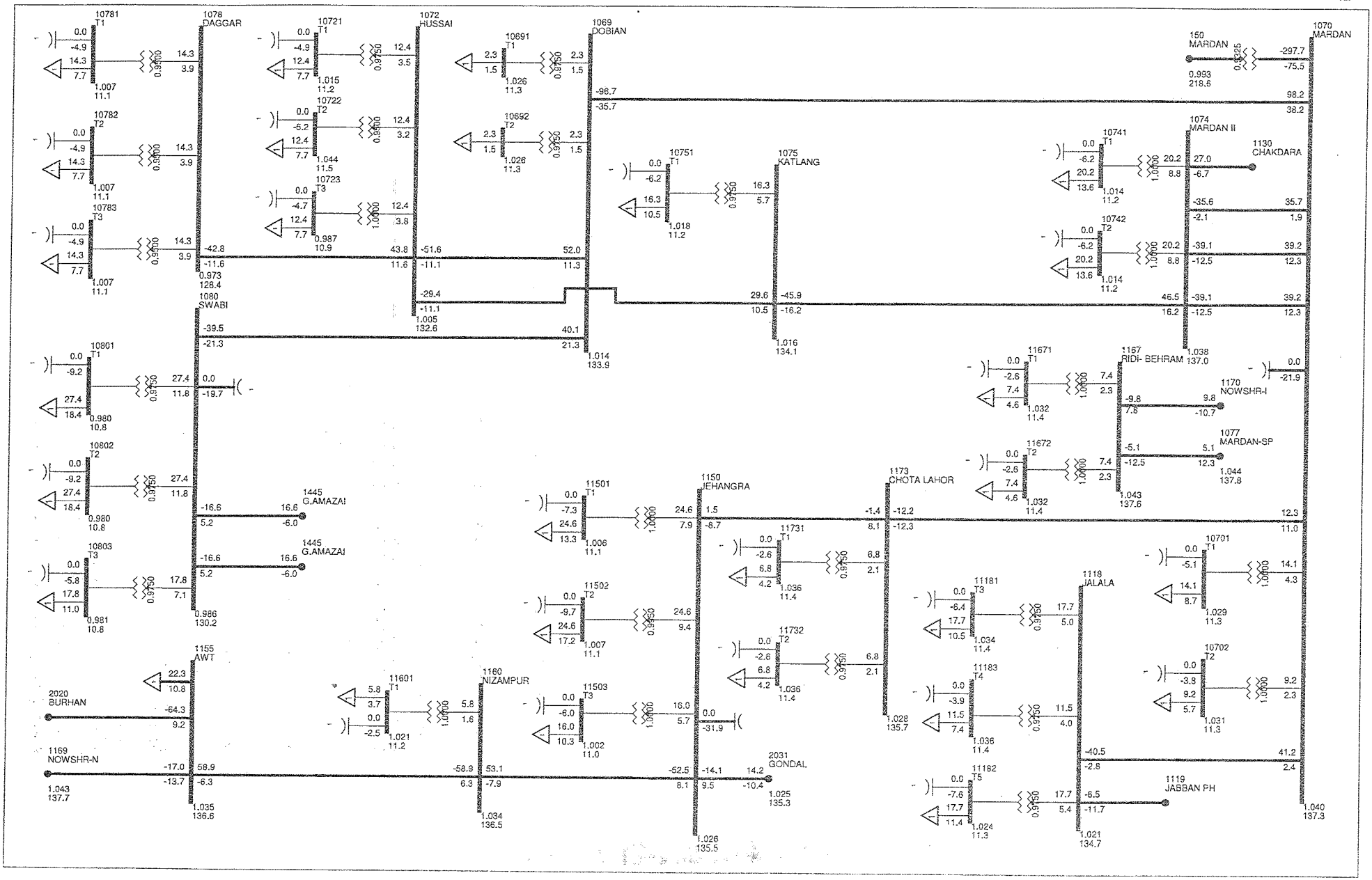

PESCO LOAD FLOW STUDY FOR (DIIP) FIVE YEAR PLAN
YEAR 2022: BASE CASE

Exhibit-1-2022-1.3

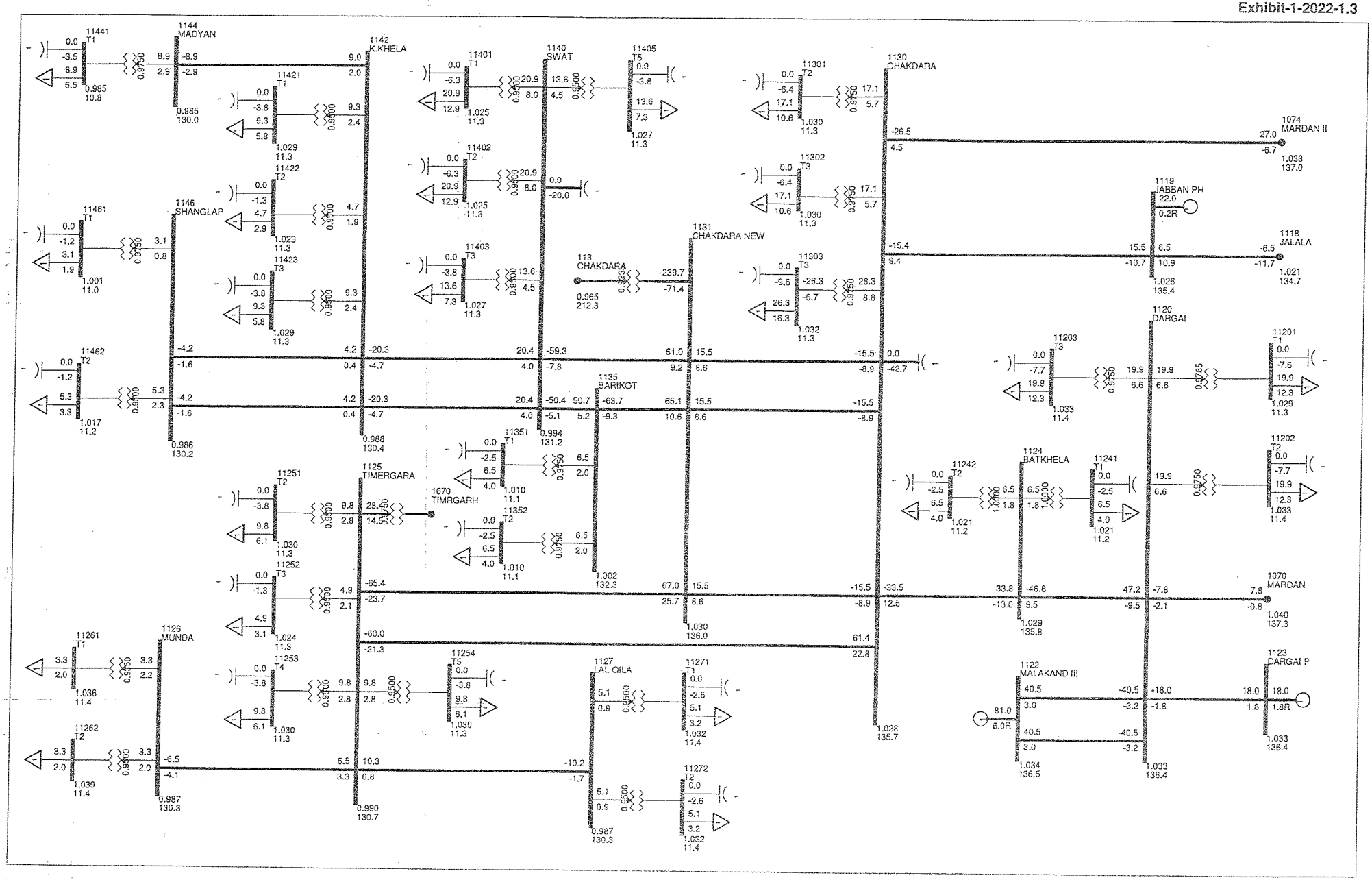

PESCO LOAD FLOW STUDY FOR (DIIP) FIVE YEAR PLAN
YEAR 2022: BASE CASE

Exhibit-1-2022-1.4

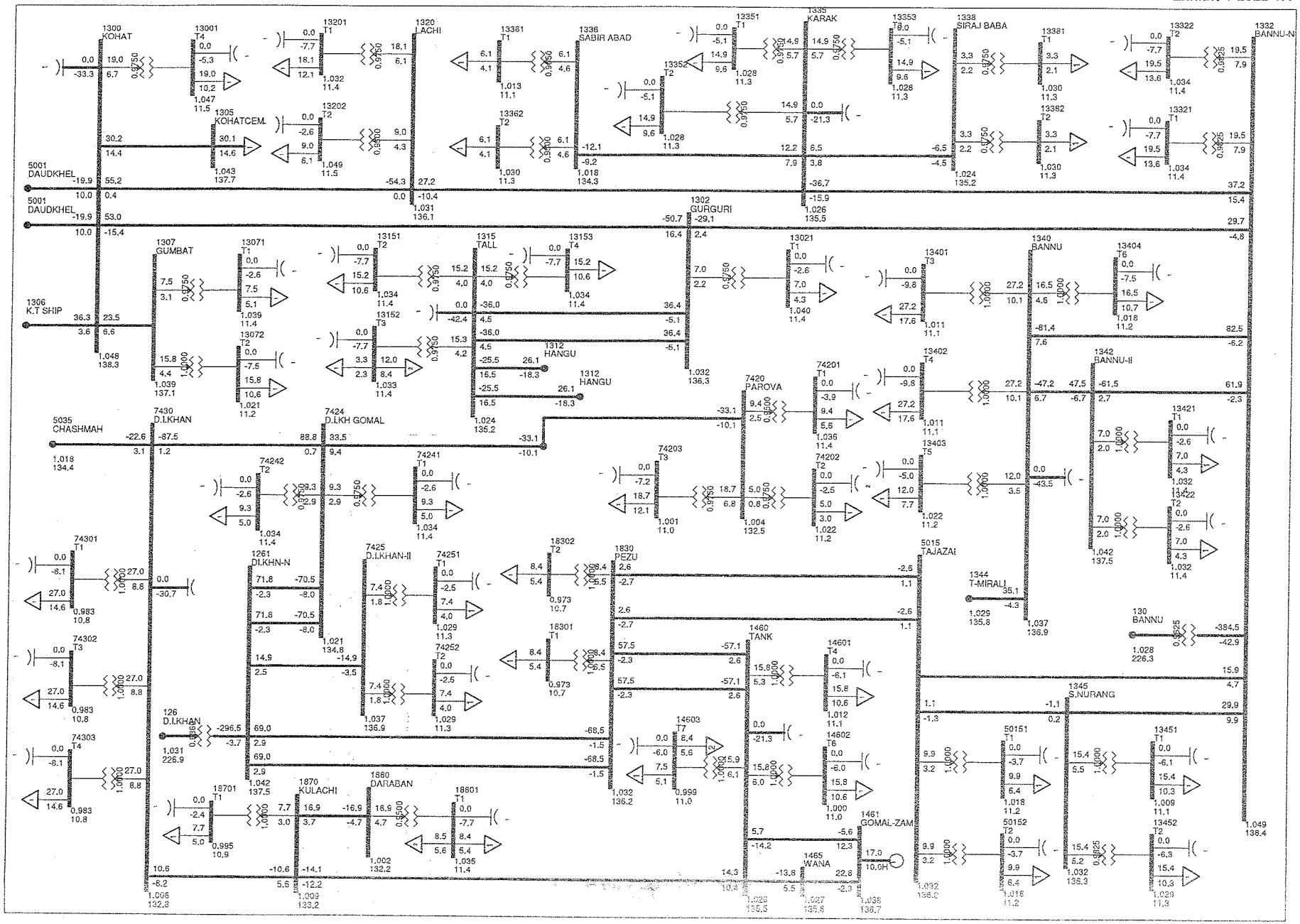

PESCO LOAD FLOW STUDY FOR (DIIP) FIVE YEAR PLAN
YEAR 2022: BASE CASE

Exhibit-1-2022-1.5

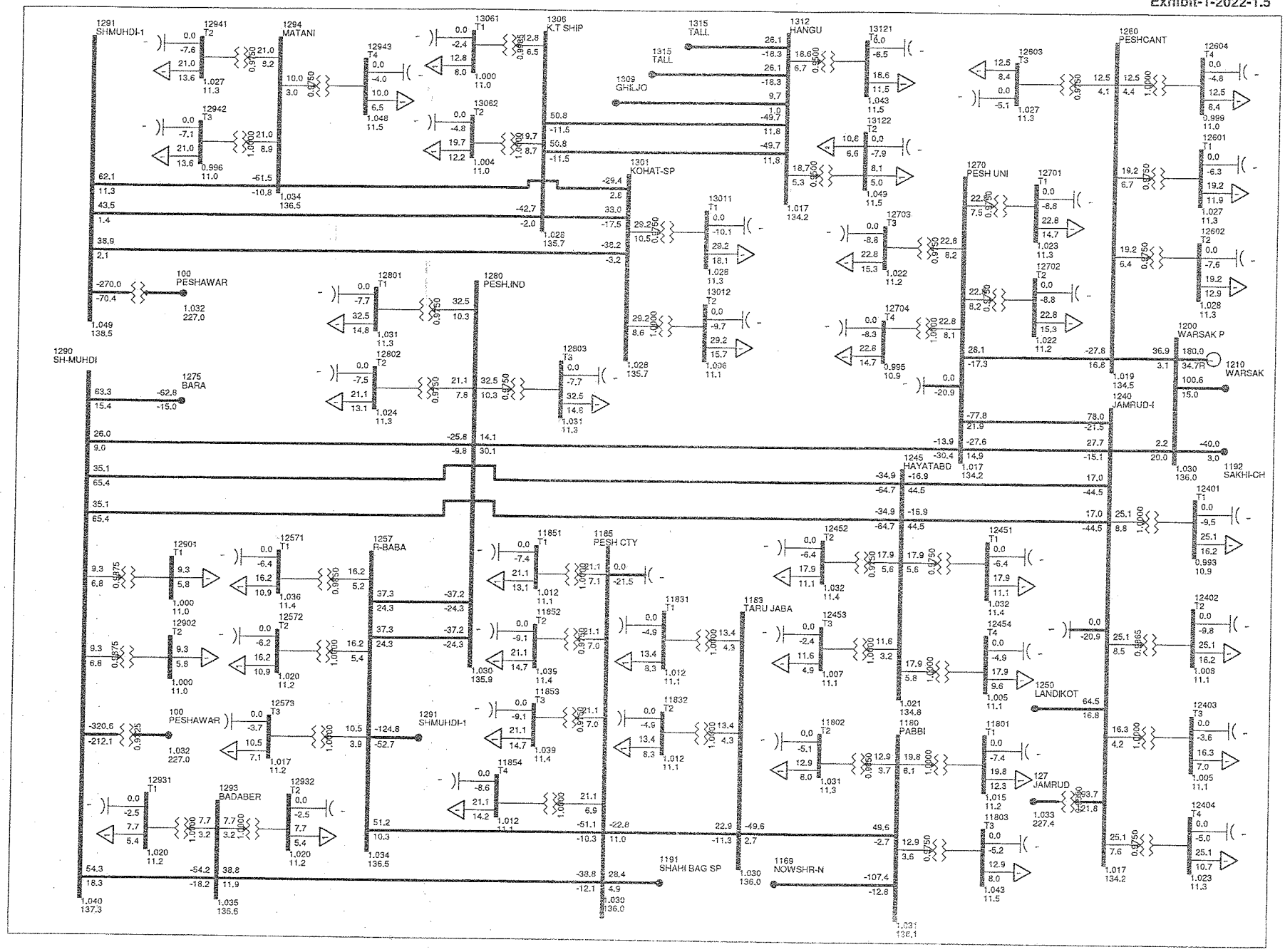

PESCO LOAD FLOW STUDY FOR (DIIP) FIVE YEAR PLAN
YEAR 2022: BASE CASE

Exhibit-1-2021-1.6

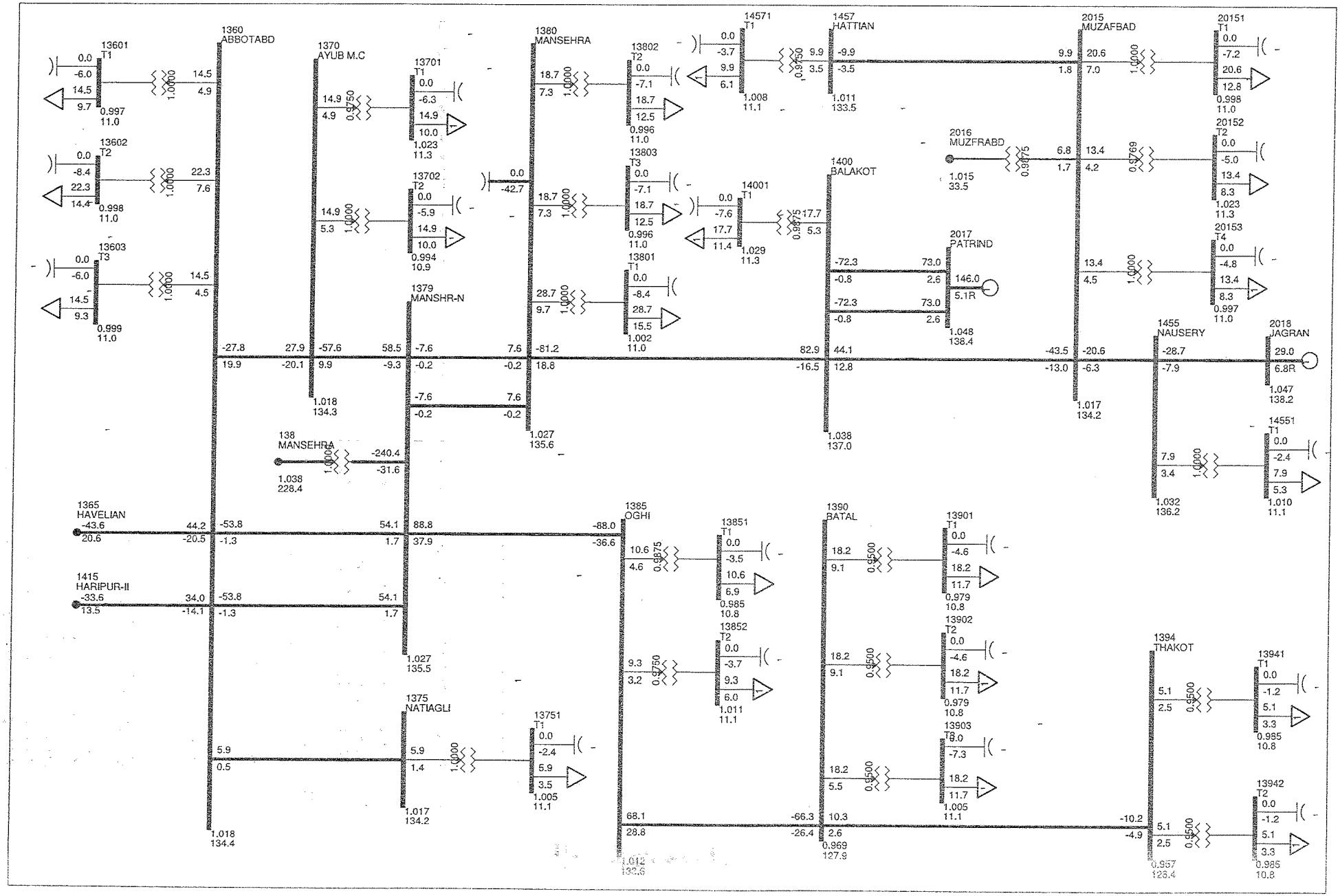

PESCO LOAD FLOW STUDY FOR (DIIP) FIVE YEAR PLAN
YEAR 2022: BASE CASE

Exhibit-1-2022-1.7

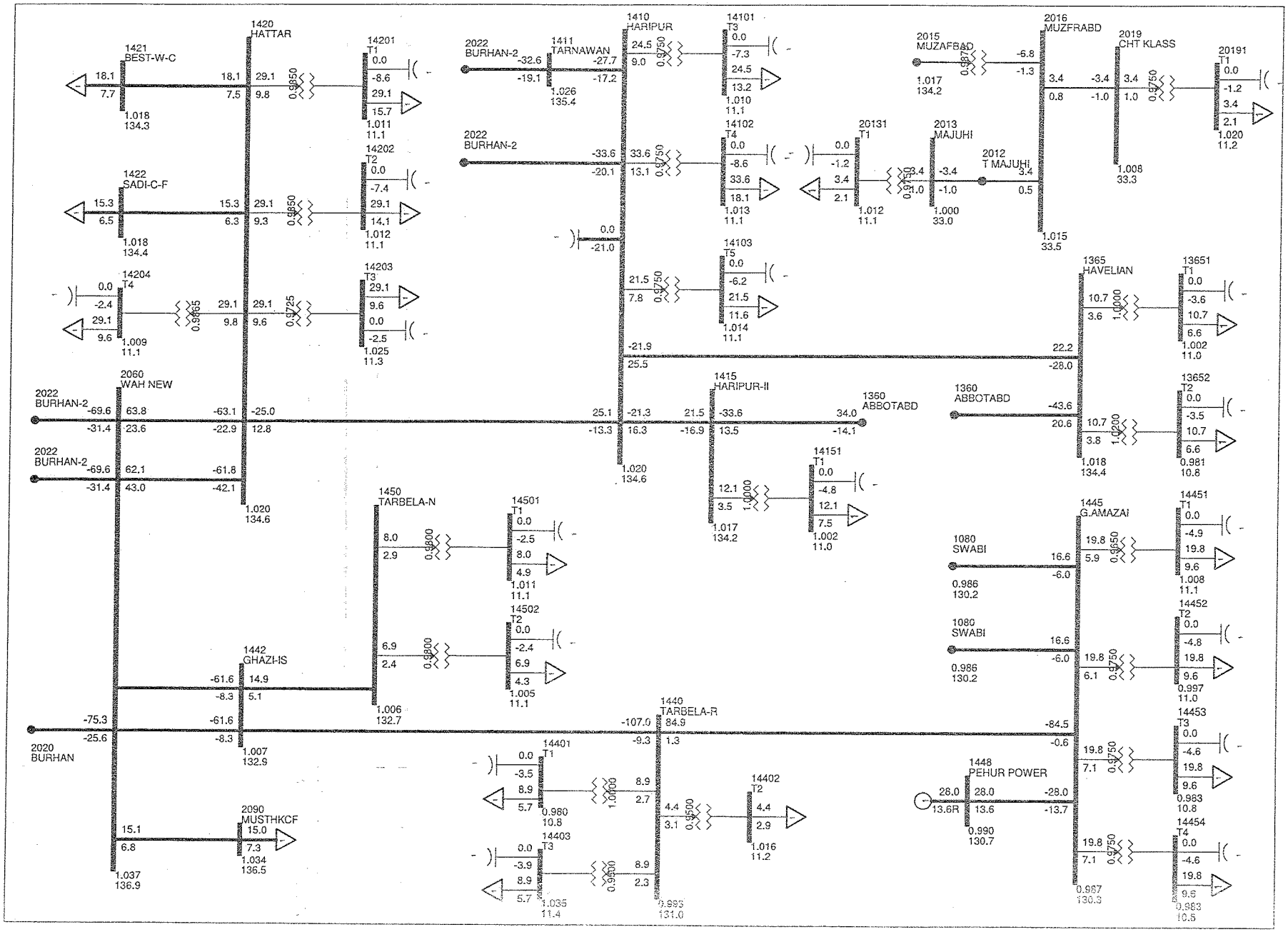

PESCO LOAD FLOW STUDY FOR (DIIP) FIVE YEAR PLAN
YEAR 2022: BASE CASE

Exhibit-1-2022-1.8

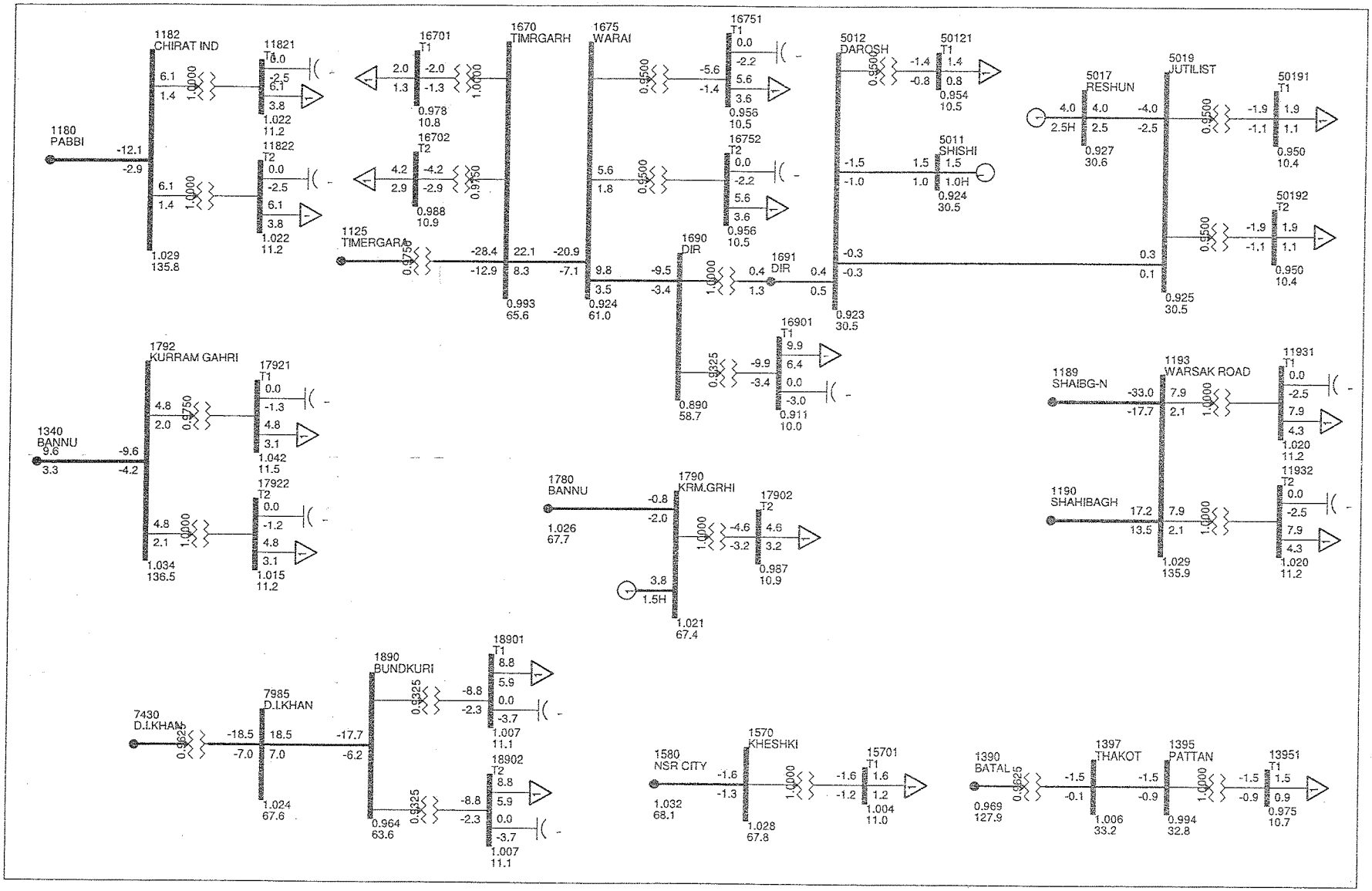

PESCO LOAD FLOW STUDY FOR (DIIP) FIVE YEAR PLAN
YEAR 2022: BASE CASE WITH REINFORCEMENT

Exhibit-1-2022-2.1

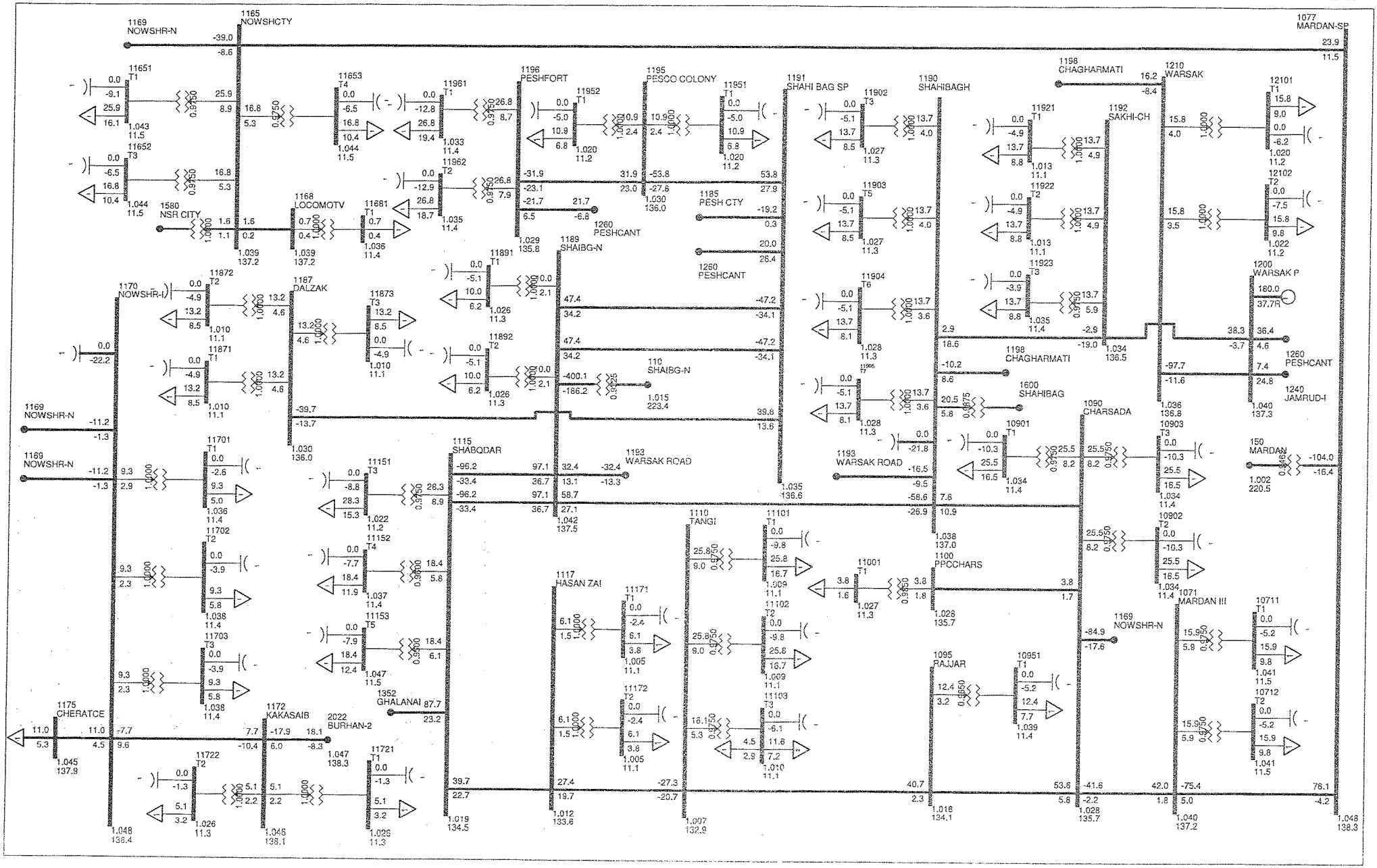

PESCO LOAD FLOW STUDY FOR (DIIP) FIVE YEAR PLAN
YEAR 2022: BASE CASE WITH REINFORCEMENT

Exhibit-1-2022-2.2

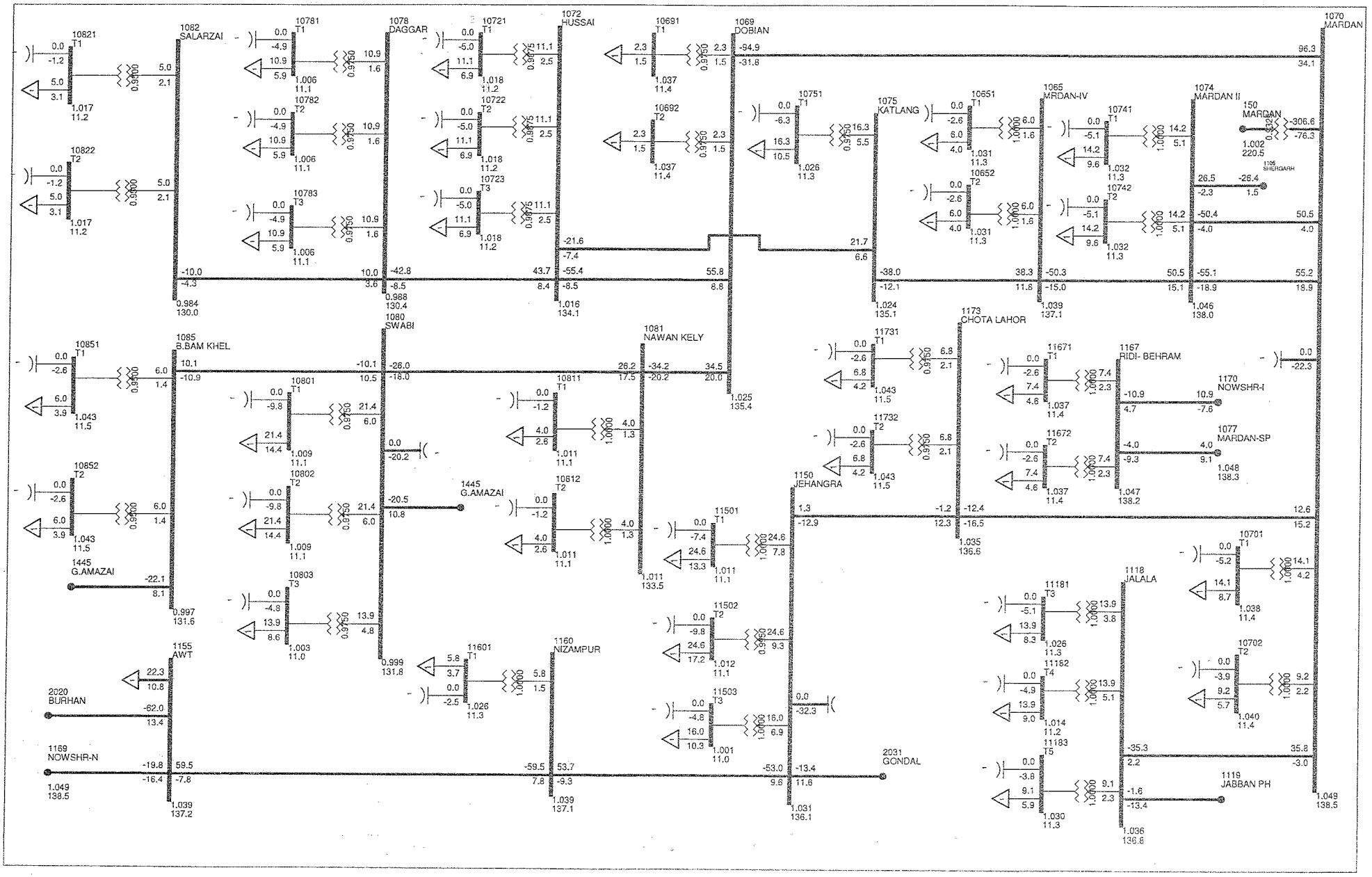

PESCO LOAD FLOW STUDY FOR (DIIP) FIVE YEAR PLAN
YEAR 2022: BASE CASE WITH REINFORCEMENT

Exhibit-1-2022-1.3

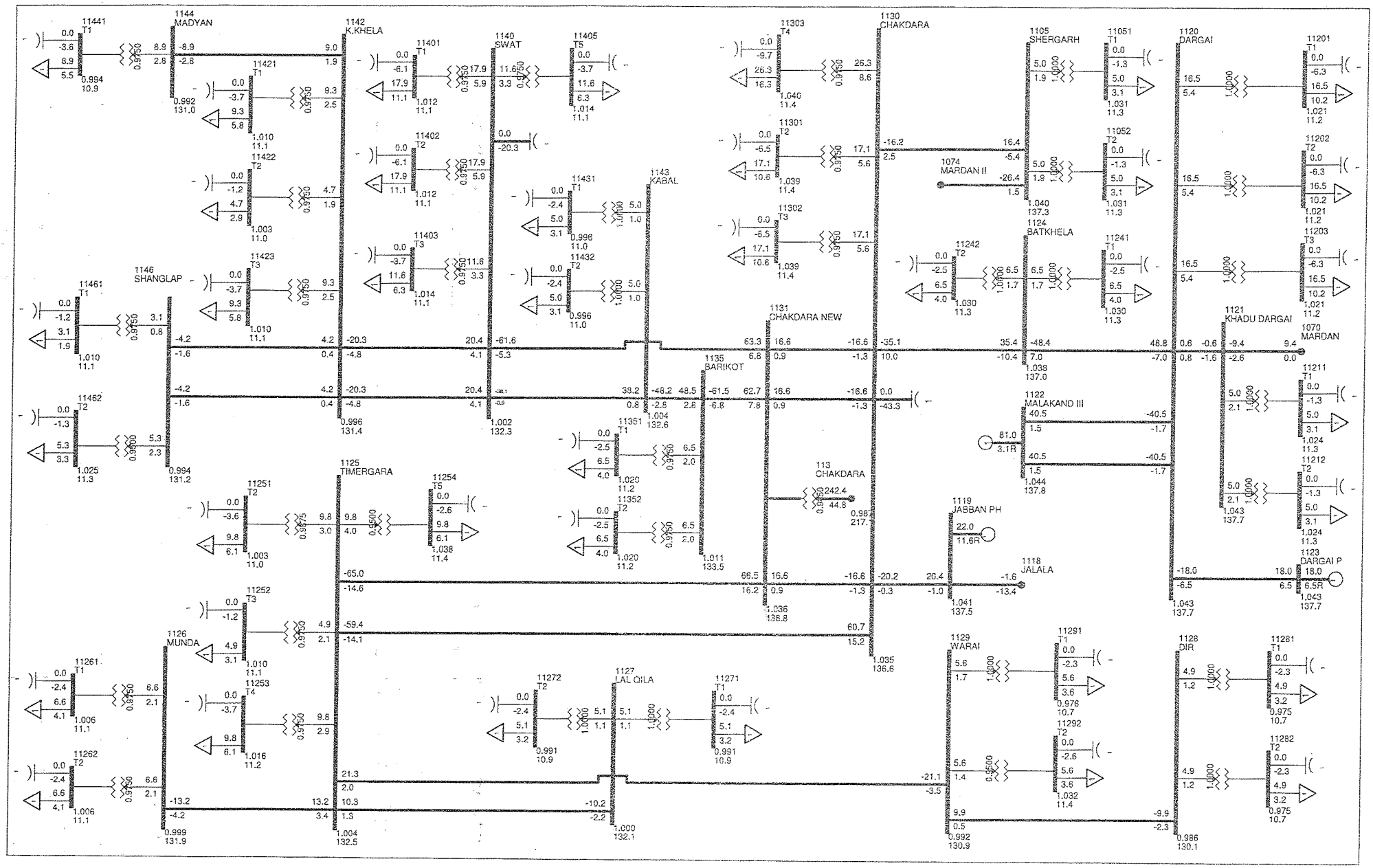

PESCO LOAD FLOW STUDY FOR (DIIP) FIVE YEAR PLAN
YEAR 2022: BASE CASE WITH REINFORCEMENT

Exhibit-1-2022-1.4

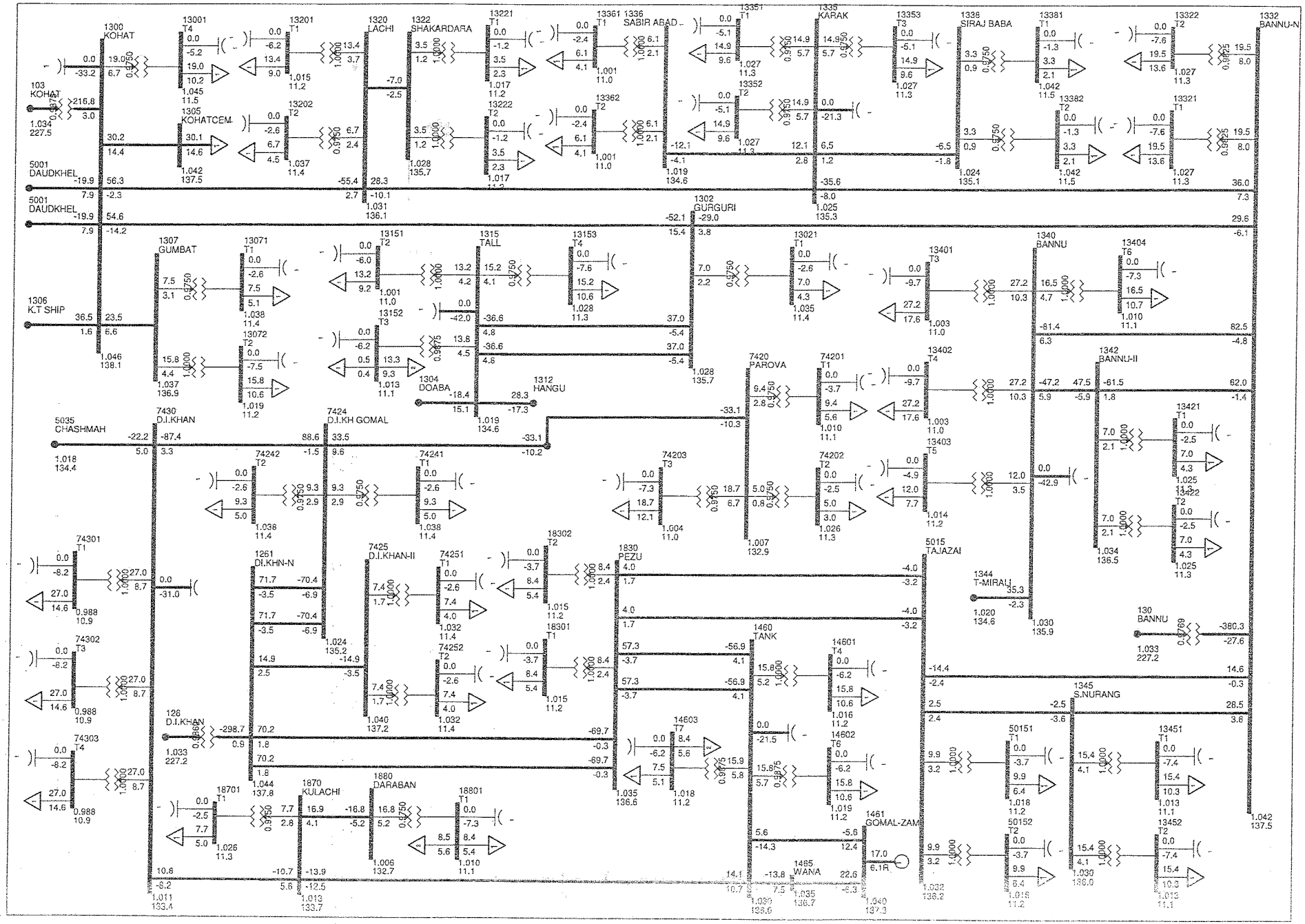

PESCO LOAD FLOW STUDY FOR (DIIP) FIVE YEAR PLAN
YEAR 2022: BASE CASE WITH REINFORCEMENT

Exhibit-1-2022-1.5

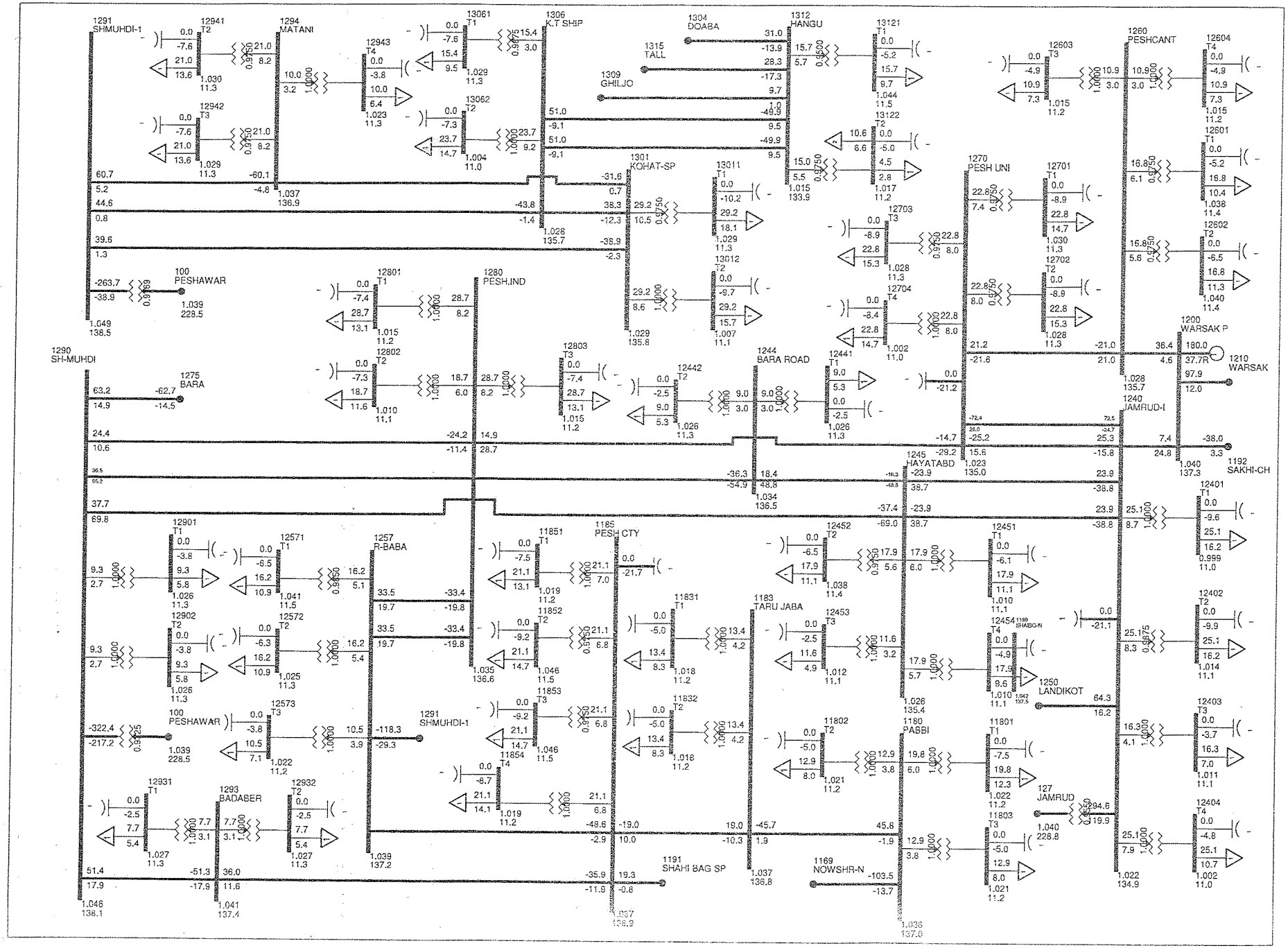

PESCO LOAD FLOW STUDY FOR (DIIP) FIVE YEAR PLAN
YEAR 2022: BASE CASE WITH REINFORCEMENT

Exhibit-1-2022-1.6

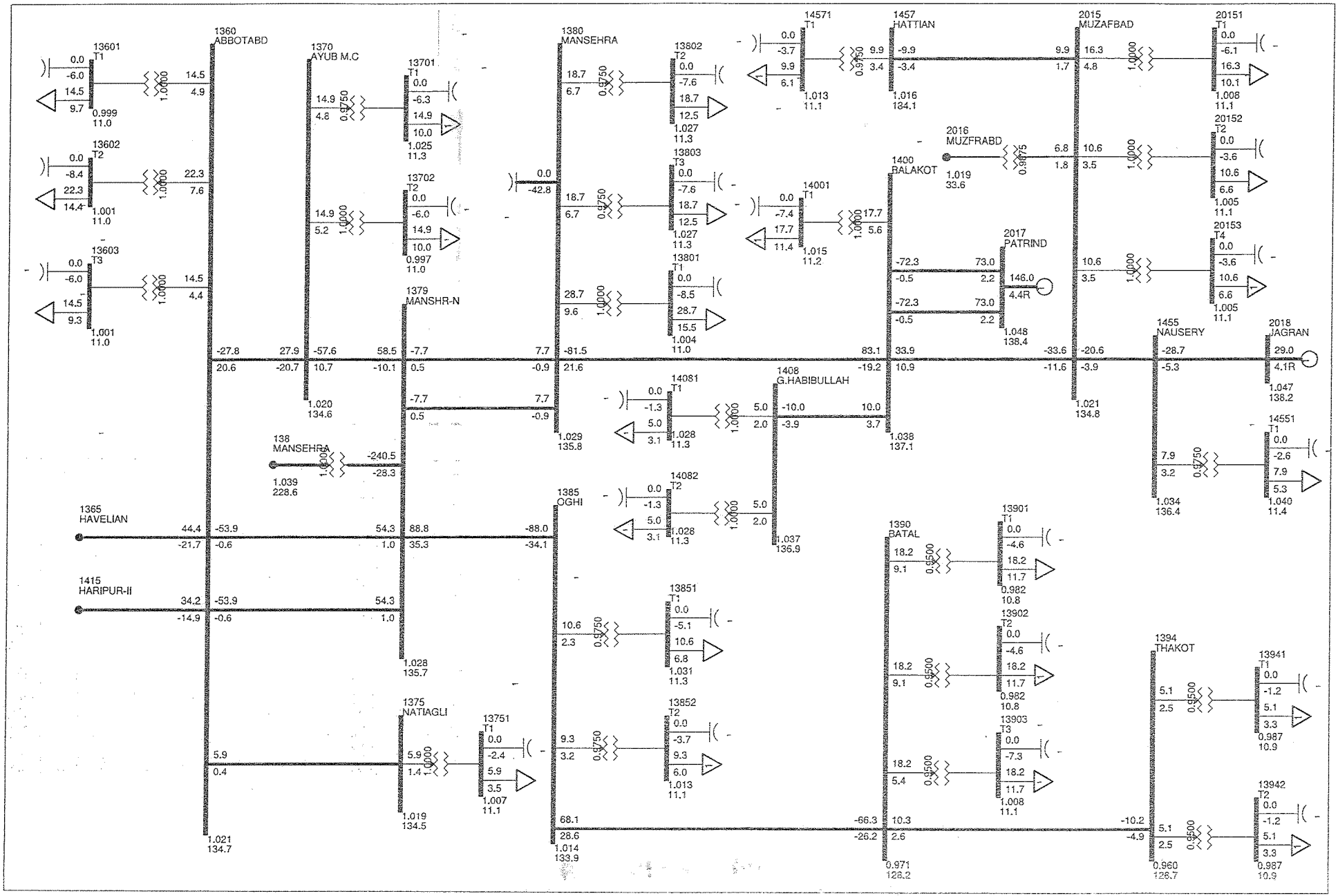

PESCO LOAD FLOW STUDY FOR (DIIP) FIVE YEAR PLAN
YEAR 2022: BASE CASE WITH REINFORCEMENT

Exhibit-1-2022-1.7

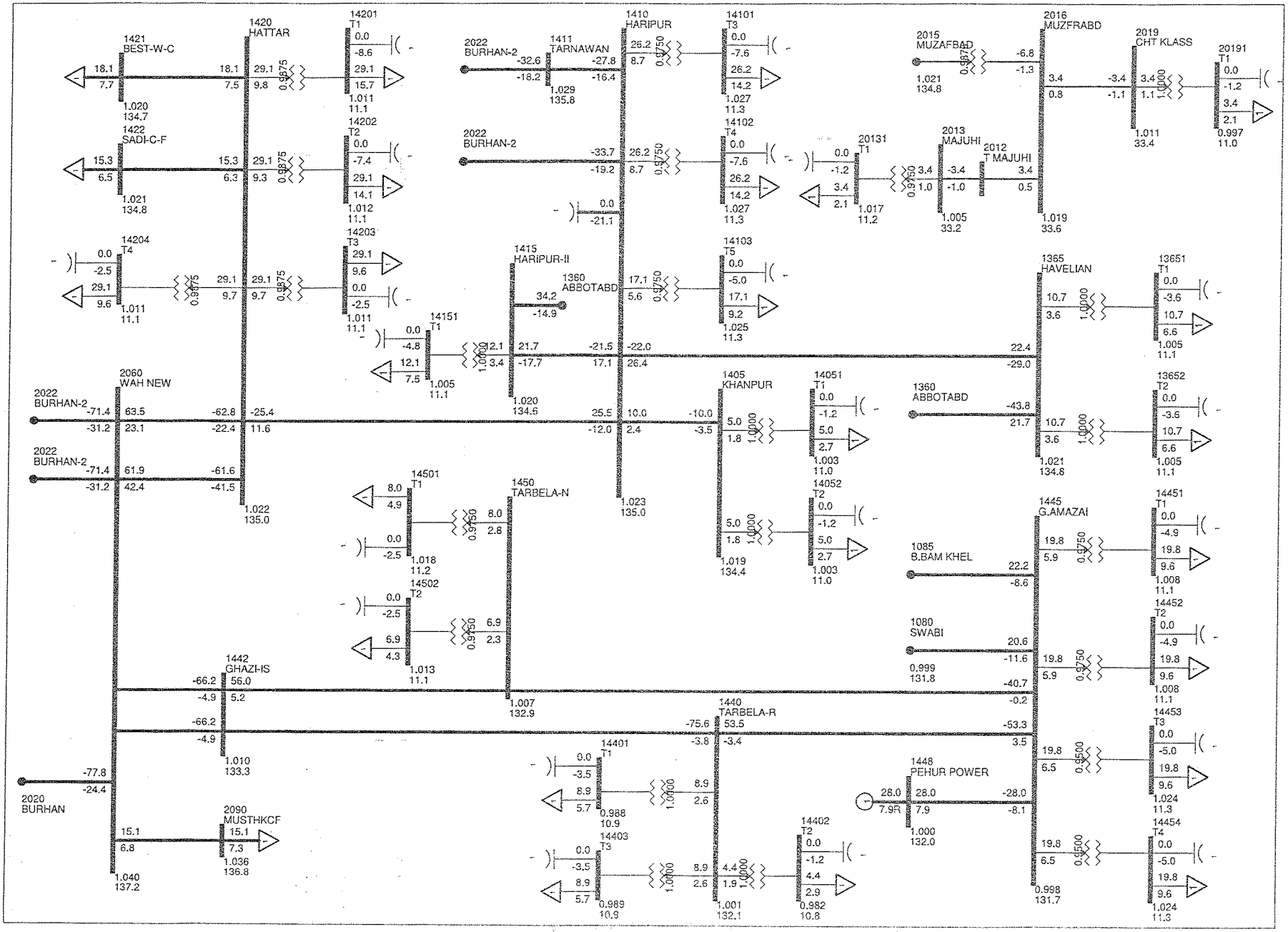

PESCO LOAD FLOW STUDY FOR (DIIP) FIVE YEAR PLAN
YEAR 2022: BASE CASE WITH REINFORCEMENT

Exhibit-1-2022-1.8

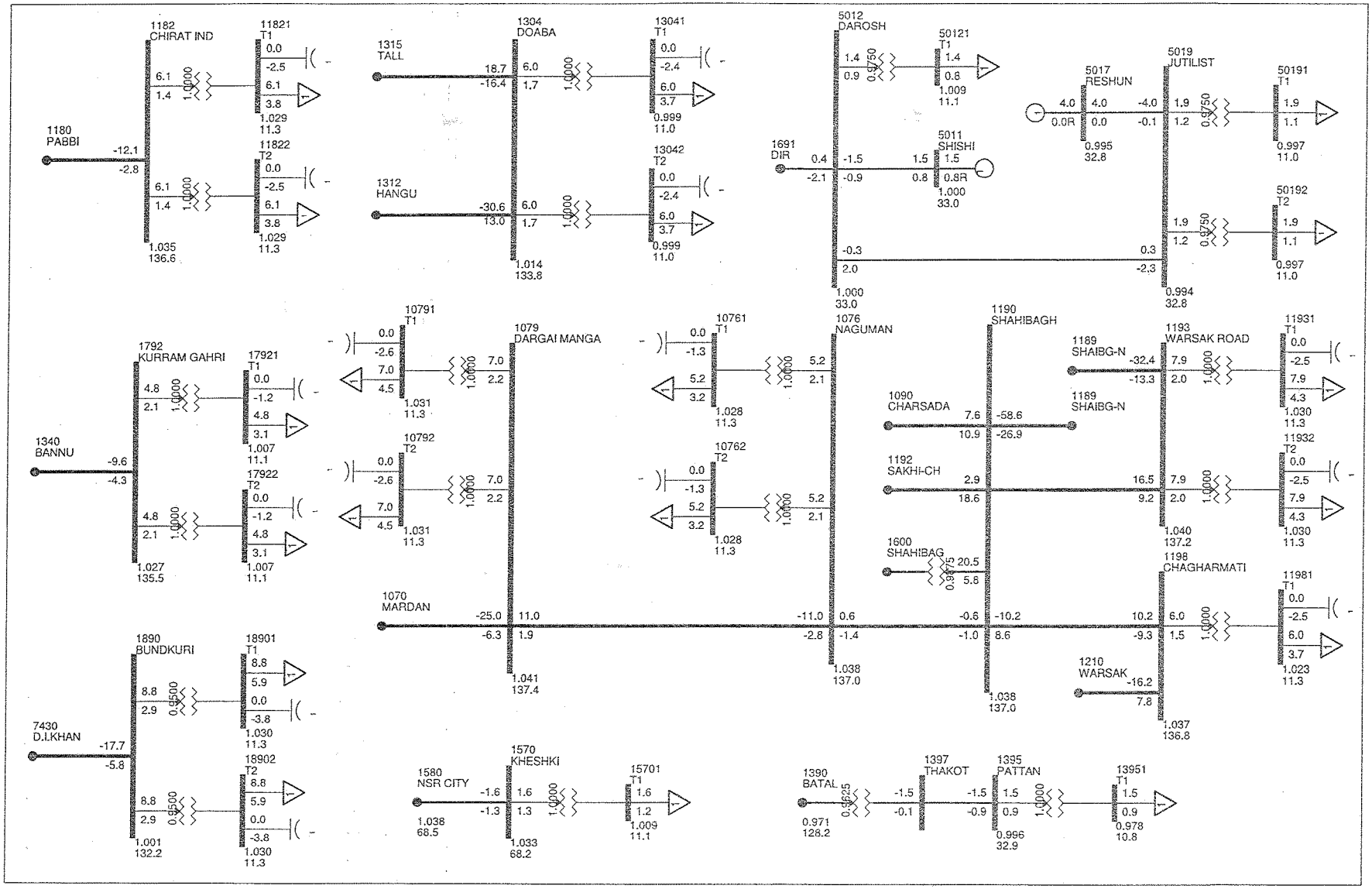

ANNEX-5

MONTHLY STATEMENT SHOWING MAXIMUM LOAD OF TRANSMISSION LINES
FOR THE MONTH OF 06/2019 IN R/O GSO CIRCLE PESCO PESHAWAR

	NAME OF GSS/ POWER HOUSE.	NAME OF TRANSMISSION LINES	BREAKER CODE NO.		LENGTH IN (K.Ms)	TYPE OF TOWER	TYPE OF CONDUCTOR	Current Carrying Capacity of the Line (On Presumption of Wind Velocity as 0.61 m/s & 40 Degree Rise) "Amp"	MAX LOAD (Amps)	Date	Time	% AGE Loading
			CONTR-OLLING	Other End								
	SS&TL DIVISION PESCO PESHAWAR											
1	**Warsak P/House.**	132KV Line Warsak P/House-New warsak-Shahibagh circuit # 1	L-1	NWK-2 NWK-1 SHB-14	26.540	OA,ZM	ZAIGALOW	498	**400**	01-06-19	18:00	**80.32**
		132KV Line Warsak P/House-S/Chashma-S/Bagh circuit # 2.	L-2	SCA-1 SCA-2 SHB-15	31.950	OA,ZM	ZAIGALOW, LYNEX	488	**355**	29-06-19	19:00	**72.75**
		132KV Line Warsak P/House-Peshawar Cantt	L-3	PCT-2	26.660	A,ZM	ZAIGALOW, LYNEX	488	**375**	24-06-19	15:00	**76.84**
		132KV Line Warsak P/House-Jamrud	L-4	JMR-1	27.690	A,ZM	ZAIGALOW, LYNEX	488	**525**	29-06-19	18:00	**107.58**
2	**500KV S/Muhammadi Peshawar**	132KV Line S/Muhammadi-Mattani-1	E19Q1	MTN-3	14.920	ZM	LYNX	488	**470**	01-06-19	19:00	**96.31**
		132KV Line S/Muhammadi-Kohat CCT-4	E18Q1	KHN-2	41.610	ZM	ZAIGALOW, LYNEX	488	**360**	01-06-19	1:00	**73.77**
		132KV Line S/Muhammadi-Kohat CCT-2	E9Q1	KHN-12	47.720	A,ZM	ZAIGALO, LYNX	488	**300**	01-06-19	19:00	**61.48**
		132KV Line S/Muhammadi-Kotal Town Kohat CCT-3	E10Q1	KDA-1	43.660	A,ZM	ZAIGALOW, RAIL	498	**440**	08-06-19	19:00	**88.35**
		132KV Line S/Muhammadi-Bara-P/University	E11Q1	- - PUN-4	20.210	A,ZM	ZAIGALO, RAIL	498	**460**	01-06-19	14:00	**92.37**
		132KV Line S/Muhammadi-P/Industrial	E12Q1	PID-2	21.930	A,ZM	ZAIGALOW, RAIL	498	**400**	01-06-19	14:00	**80.32**
		132KV Line S/Muhammadi-Peshawar City	E13Q1	PCY-1	12.750	ZM-1 Korean	RAIL	868	**460**	01-06-19	2:00	**53.00**
		132KV Line S/Muhammadi-R/Baba-P/City	E14Q1	RMB-2 RMB-1 PCY-2	17.910	ZM, Korean	RAIL	868	**460**	01-06-19	2:00	**53.00**
		132KV Line S/Muhammadi-Hayatabad CCT-1	E15Q1	HTD-1	17.480	ZM-1 Korean	RAIL	868	**330**	23-06-19	8:00	**38.02**
		132KV Line S/Muhammadi-Hayatabad CCT-2	E16Q1	HTD-2	17.480	ZM-1 Korean	RAIL	868	**330**	23-06-19	8:00	**38.02**
3	**220KV Shahi Bagh Peshawar.**	132KV Line New S/Bagh-Old S/Bagh	E9Q1	SHB-1	5.760	OA,ZM	ZAIGALOW, LYNEX	488	**300**	02-06-19	6:00	**61.48**
		132KV Line New Shahibagh-Old S/Bagh-Dalazak Nowshera Industrial.	E8Q1	SHB-2 DKL-1	38.240	OA,ZM	ZAIGALOW LYNEX	488	**300**	02-06-19	6:00	**61.48**
		132KV Line New S/Bagh-Shabqader CCT-1	E12Q1	SQD-5	20.400	ZM	LYNEX	488	**420**	02-06-19	21:30	**86.07**
		132KV Line New S/Bagh-Shabqader CCT-2	E13Q1	SQD-6	20.400	ZM	LYNEX	488	**420**	02-06-19	21:30	**86.07**

	NAME OF GSS/ POWER HOUSE.	NAME OF TRANSMISSION LINES	BREAKER CODE NO.		LENGTH IN (K.Ms)	TYPE OF TOWER	TYPE OF CONDUCTOR	Current Carrying Capacity of the Line (On Presumption of Wind Velocity as 0.61 m/s & 40 Degree Rise) "Amp"	MAX LOAD (Amps)	Date	Time	% AGE Loading
			CONTR-OLLING	Other End								
4	132KV Shahi Bagh Peshawar.	132KV Line Shahibagh-Mardan CCT-1	SHB-3	E10Q1	53.630	ZM	PAINTHER, LYNEX	488	0	-	-	0.00
		132KV Line Shahibagh-Mardan CCT-2	SHB-4	E9Q1	53.230	ZM	PAINTHER, LYNEX	488	0	-	-	0.00
		132KV Line Shahibagh-Peshawar Fort CCT-1	SHB-5	PFT-1	8.124	ZM, Korean	RAIL	868	0	-	-	0.00
		132KV Line Shahibagh-Wapda House-Peshawar Fort CCT-2	SHB-6	WHP-1 PFT-2	8.124	ZM, Korean	RAIL	868	260	26-06-19	17:00	29.95
		66KV Line S/Bagh-Warsak-T/Off S/Sung Pumping Station.	SHB-7	WSD-1	38.550	SA,D	DOG, BEAVER	281	180	26-06-19	17.00	64.06
		66KV Line Shahibagh-Badaber-Mattani	SHB-13	ISO	35.680	SA, TUBLER	DOG	346	140	01-06-19	9:00	40.46
5	132KV Jamrud.	132KV Line Jamrud-P/University	JMR-2	PUN-2	9.080	ZM,A	ZAIGALOW, LYNEX	488	320	29-06-19	20.00	65.57
		132KV Line Jamrud-Hayatabad	JMR-3	HTD-1	2.710	TBA,TYD, Korean	LYNEX	488	408	27-06-19	0:00	83.61
		132KV Line Jamrud-Landi Kotal	JMR-4	ISO	35.000	TBA,TYD	LYNEX	488	120	23-06-19	8:00	24.59
6	132KV Kohat	132KV Line Kohat-Daud Khel CCT-1	KHN-3	E4Q1	45.000	A,ZM	ZAIGALOW	498	260	26-06-19	19:00	52.21
		132KV Line Kohat-Daud Khel CCT-2	KHN-9	E5Q1	45.000	A,ZM	ZAIGALOW	498	260	26-06-19	19:00	52.21
		132KV Line Kohat-Kohat Cement Factory	KHN-6	ISO	6.400	TBA,TYD	LYNEX	488	280	16-06-19	11:00	57.38
		132KV Line Kohat-Gumbat	KHN-11	ISO	21.500	TBA,TYD	LYNEX	488	70	01-06-19	22:00	14.34
		132KV Line Kohat-Kotal Town Kohat .	KHN-13	KDA-2	6.940	A, ZM	Ziagalow/Lynex	488	300	01-06-19	18:00	61.48
		66KV Line Kohat-Hangu-T/Off Kalaya	KHN-7	ISO	93.020	SM,TBA, TYD	DOG, LYNX	346	90	01-06-19	12.00	26.01
		66KV Line New Kohat-Old Kohat	KHN-8	ISO	8.000	SM	DOG	346	60	02-06-19	15.00	17.34
7	132KV Kotal Town Kohat	132KV Line Kotal Town Kohat-Hangu CCt: 1	KDA-3	HNG-3	47.000	ZM	LYNEX	488	75	08-06-19	20.00	15.37
		132KV Line Kotal Town Kohat-Hangu CCt: 2	KDA-4	HNG-4	47.000	ZM	LYNEX	488	75	08-06-19	20.00	15.37
8	132KV Mattani	132KV Line Mattani-Kohat	MTN-2	KHN-1	29.670	ZM	LYNEX	488	0	-	-	0.00
9	132KV Pesh: City	132KV Line Peshawar City-Pabbi-Nowshera Industrial	PCY-4	PBI-1	40.220	OA,ZM	ZAIGALOW, LYNEX	488	300	01-06-19	22.00	61.48
10	132KV Peshawar University	132KV Line P/University-Peshawar Cantt	PUN-1	PCT-1	19.690	A,ZM	ZAIGALO, LYNX	488	0	-	-	0.00
		132KV Line P/Universitry-Peshawar Indl	PUN-3	PID-1	20.070	A,ZM	ZAIGALOW, LYNEX	488	210	23-06-19	1:00	43.03
		132KV Line P/University-S/Muhammadi	PUN-4	E11Q1	20.210	A,ZM	ZAIGALOW, RAIL	498	345	01-06-19	14.00	69.28
11	132KV P/Industrial	132KV Line Peshawar Industrial-S/Muhammadi	PID-2	E12Q1	21.930	A,ZM	ZAIGALO, RAIL	498	400	02-06-19	1:00	80.32

	NAME OF GSS/ POWER HOUSE.	NAME OF TRANSMISSION LINES	BREAKER CODE NO.		LENGTH IN (K.Ms)	TYPE OF TOWER	TYPE OF CONDUCTOR	Current Carrying Capacity of the Line (On Presumption of Wind Velocity as 0.61 m/s & 40 Degree Rise) "Amp"	MAX LOAD (Amps)	Date	Time	% AGE Loading
			CONTR-OLLING	Other End								
12	132KV Tall	132KV Line Tall-Parachinar	TAL-3	ISO	78.532	ZM	LYNEX	488	200	01-06-19	18:00	40.98
		66KV Line Tall-Hangu-T/Off Ghiljo	TAL-1	HNG-2	86.493	SM	DOG	346	0			0.00
		66KV Line Tall-Alizai-Sadda-P/Chinar	TAL-2	ISO	90.695	SM	DOG	346	200	25-06-19	09.00	57.80
13	132KV Charsadda	132KV Line Charsadda-Rajjar-Tangi	CSD-2	ISO	32.570	TBA,TYD	LYNEX	488	390	04-06-19	22:00	79.92
		132KV Line Charsadda-Mardan-Shahibagh	CSD-3	E10Q1 SHB-3	0.400		LYNEX	488	320	04-06-19	22.00	65.57
		132KV Line Charsadda-PPC Mill	CSD-4	ISO	2.010	LANDATIVE	PAINTHER	533	0	-	-	0.00
14	132KV Tangi	132KV Line Tangi-Shabqadar	TNG-2	ISO	14.860	TBA,TYD	LYNEX	488	405	01-06-19	22.00	82.99
15	132KV Shabqader	132KV Line Shabqader-Ghallanai	SQD-4	ISO	23.690	ZM	LYNEX	488	200	23-06-19	17:00	40.98
		66 KV Line Shabqader-Ghallanai-Lakkarai.	SQD-2	ISO	33.600	SM GS	DOG	346	210	23-06-19	17:00	60.69
	SS&TL DIVISION PESCO MARDAN											
1	220KV Mardan	132KV Line Mardan-Nowshera Indl	E1Q1	NSI-7	28.040	ZM,TBA, TYD,TM	LYNEX	488	280	02-06-19	12:00	57.38
		132KV Line Mardan-ZRK Industry-Nowshera City	E2Q1	ISO	31.700	ZM,TBA, TYD,TM	LYNEX	488	420	02-06-19	11:00	86.07
		132KV Line Mardan-Shahibagh up to Charsadda circuit # 1	E10Q1	SHB-3	26.030	ZM	LYNEX	488	460	03-06-19	0:00	94.26
		132KV Line Mardan-Shahibagh up to Charsadda circuit # 2	E9Q1	SHB-4	26.030	ZM	LYNEX	488	0	-	-	0.00
		132KV Line Mardan-Jehangira	E7Q1	JNG-2	35.170	Landative, ZM	WOLF, LYNEX	446	360	01-06-19	22:00	80.72
		132KV Line Mardan-Dargai	E8Q1	DRG-1	59.170	Landative, TBA	WOLF, LYNX	446	280	10-06-19	17:00	62.78
		132KV Line Mardan-Dhobian	E13Q1	ISO	58.960	TBA, TM	LYNEX	488	510	25-06-19	23:00	104.51
		132KV Line Mardan-Mardan-2.	E15Q1	ISO	6.000	ZM	LYNEX	488	340	29-06-19	15:00	69.67
		132KV Line Mardan-Mardan-3	E16Q1	MDN-1	6.920	TBA, TM	LYNEX	488	440	03-06-19	23:00	90.16
		132KV Line Mardan-Jalala-Chakdara	E17Q1	ISO	77.000	ZM	LYNEX	488	360	01-06-19	23:00	73.77
2	220KV Chakdara	132KV Line New Chakdara-old Chakdara	E2Q1	CKD-2	12.260	TBA,TYD,ZM	LYNEX/RAIL	488	435	01-06-19	22:00	89.14
		132KV Line New Chakdara-Barikot-Swat	E3Q1	Iso	34.890	TBA,TYD,ZM	LYNEX/RAIL	488	360	06-06-19	2:00	73.77
3	132KV Dargai	132KV Line Dargai-Chakdara	DRG-2	CKD-1	30.070	TBA, TYD, TM	LYNEX	488	300	03-06-19	20:00	61.48
4	Jabban P/House.	132KV Line Jabban-Jalala section.	E1Q1	JLA-3	19.235	-	LYNEX	488	0	-	-	0.00
		132KV Line Jabban-Chakdara section.	E2Q1	CKD-8	26.620	-	LYNEX	488	120	01-06-19	11:00	24.59
5	Malakand-III P/ House	132KV D/C LineMalakand-III -Dargai CCT-1	Q1,2,3,4	DRG-3	1.500	ZM,ZM30, ZM60	LYNEX	488	190	01-06-19	1:00	38.93
		132KV D/C LineMalakand-III -Dargai CCT-2	Q1,2,3,4	DRG-4	1.500	ZM,ZM30, ZM60	LYNEX	488	190	01-06-19	1:00	38.93

	NAME OF GSS/ POWER HOUSE.	NAME OF TRANSMISSION LINES	BREAKER CODE NO.		LENGTH IN (K.Ms)	TYPE OF TOWER	TYPE OF CONDUCTOR	Current Carrying Capacity of the Line (On Presumption of Wind Velocity as 0.61 m/s & 40 Degree Rise) "Amp"	MAX LOAD (Amps)	Date	Time	% AGE Loading
			CONTR-OLLING	Other End								
6	132KV Chakdara	66-KV Line Chakdara-Timergara	CKD-4	ISO	32.330	GS	DOG	346	278	04-06-19	22:00	80.35
		66-KV Line Chakdara-Daggar	CKD-5	ISO	55.320	GS	DOG	346	10	03-06-19	12:00	2.89
		132KV Line Chakdara-Timeragara	CKD-6	TGH-5	30.000	TBA, TYD, TM	LYNEX	488	210	14-06-19	19:00	43.03
		132KV Line Chakdara-Swat	CKD-9	SWT-2	34.150	ZM,SPD,EA	LYNEX	488	200	13-06-19	16:00	40.98
7	132KV Timergara	66-KV Line Timeragar(132KV)-Bajawar	TGH-2	ISO	39.190	GS, ZM	DOG	346	225	01-06-19	18:00	65.03
8	132KV Nowshera Industrial	132KV Line NSR: Indl-Burhan CCT-1	NSI-1	E6Q1	33.600	ZM, OA	ZAIGALOW	498	0	-	0	0.00
		132KV Line NSR: Indl-In Out AWT C.Factory-In Out Kamra-Burhan CCT-2	NSI-2	E7Q1	33.600	ZM, OA	ZAIGALOW	498	150	22-06-19	23:00	30.12
		132KV Line NSR: Indl - S/Bagh CCT-1	NSI-3	SHB-1	33.460	OA,ZM	ZAIGALOW LYNEX	488	224	03-06-19	23:00	45.90
		132KV Line NSR: Indl - S/Bagh CCT-2	NSI-4	SHB-2	33.460	OA,ZM	ZAIGALOW LYNEX	488	200	02-06-19	11:00	2.00
		132KV Line Nowshera Indl-Nowshera City	NSI-5	ISO	7.260	TBA, TYD, TM	LYNEX	488	150	01-06-19	1:00	30.74
		132KV Line NSR: Indl-Cherat C.Fact:	NSI-6	ISO	16.070		LYNEX	488	139	02-06-19	11:00	28.48
		132KV Line NSR: Industrial-220KV Mardan	NSI-7	E1Q1	28.040	ZM,TBA, TYD,TM	LYNEX	488	330	02-06-19	11:00	67.62
9	132KV Nowshera City.	132KV Line Nowshera City-Locomotive Factory Risal-pur..	NSC-2	ISO	8.000	TBA, TYD, TM	LYNEX	488	2	02-06-19	18.00	0.41
		66-KV Line NSR:City-Kheshki	NSC-5	ISO	15.460	SM, H-Pole	Stay wire	250	20	05-06-19	08.00	8.00
10	132KV Jehangira	132KV Line Jehangira-Gondal- upto Attock	JNG-1	GND-1	11.210	ZM, Landative	LYNEX	488	75	28-06-19	17.00	15.37
		132KV Line Jehangira-Mardan	JNG-2	E7Q1	35.170	ZM, Landative	LYNEX	488	296	28-06-19	18.00	60.66
		132KV Line Jehangira-Nizampur	JNG-3	ISO	21.160	TBA, ZM, TYD,TM	LYNEX	488	20	22-06-19	00.00	4.10
11	132KV Nizampur	132KV Line Nizampur-A.W.T C/Factory	NZP-2	ISO	1.080	TBA, ZM, TYD,TM	LYNEX	488	-	-	-	
12	132KV Kamra	132KV Line Kamra-AWT C.Factory section	PKR-2	NCF-3	47.000	-	LYNEX / Wolf	488	151	11-06-19	12.00	30.94
13	132KV R / Bank Tarbela	132KV Line Right BankTarbela-Gadoon Amazai section.	RBT-2	GAZ-1	5.370	ZM	LYNEX	488	145	10-06-19	04.00	29.71
14	132KV Gadoon Amazai	132KV Line Gadoon Amazai-Sawabi Circuit # 1	GAZ-3	SWB-2	17.000	ZM,SBA	LYNEX	488	184	23-06-19	20.00	37.70
		132KV Line Gadoon Amazai-Sawabi Circuit # 2	GAZ-4	SWB-3	17.000	ZM,SBA	LYNEX	488	184	23-06-19	20.00	37.70
15	Pehure P/House	132KV Line Pehure P/House-Gadoon Amazai section.	E1Q1	GAZ-5	1.050		LYNEX	488	26	04-06-19	18.00	5.33
16	Golen Gol P/House (Chitral)	132KV Line Golen Gol P/House-Jutilasht section.	E2Q2 E2Q3	JLT-1	31.000	JKD,ED,ZM	Rail/Deer	800	38	05-06-19	05.00	4.75
		132KV Line Golen Gol-Timergara	E3Q2 E3Q3	TGH-3	176.700	JKD,ED,ZM	Rail/Deer	800	169	26-06-19	10.00	21.13
17	132KV Jutilasht	132KV Line Jutilasht-Drosh section.	JTL-2	DRH-2	28.100	JKD,ED,ZM	Rail	868	12	21-06-19	12.00	1.38
18	132KV Drosh	132KV Line Drosh-Timergara	DRH-1	TGH-1	115.770	JKD,ED,ZM	Rail/Deer	800	30	12-06-19	17.00	3.75
19	66KV Timergara	66-KV Line Timergara-Bajawar	TMG-2	ISO	36.910	GS, ZM	DOG	346	0	-	-	0.00
		66-KV Line Timeragara-Wari-Dir	TMG-5	ISO	80.000	GS	DOG	346	165	02-06-19	15.00	47.69
20	66KV Dir	33-KV Line Dir-Chitral	33 KV	-	110.000	STP & Structures	DOG	345	0	-	-	0.00

	NAME OF GSS/ POWER HOUSE.	NAME OF TRANSMISSION LINES	BREAKER CODE NO.		LENGTH IN (K.Ms)	TYPE OF TOWER	TYPE OF CONDUCTOR	Current Carrying Capacity of the Line (On Presumption of Wind Velocity as 0.61 m/s & 40 Degree Rise) "Amp"	MAX LOAD (Amps)	Date	Time	% AGE Loading
			CONTR-OLLING	Other End								
21	132KV Mardan-II	132KV Line Mardan-2-Chakdara	MRD-2	CKD-7	-	ZM	LYNEX	488	20	08-06-19	01.00	4.10
		132KV Line Mardan-Katlong	MRD-3	ISO	28.130	ZM	LYNEX	488	69	03-06-19	23.00	14.14
22	132KV Hussai	132KV Line Hussai-Daggar section.	HSI-2	ISO	39.720	ZM	LYNEX	488	280	18-06-19	14.00	57.38
23	132KV Dhobian	132KV Line Dhobian-Swabi section	DBN-1	ISO	25.090	TBA,TM	LYNEX	488	220	10-06-19	05.00	45.08
		132KV Line Dhobian-Hussai-Daggar section	DBN-3	ISO	15.000	TBA,TM	LYNEX	488	469	23-06-19	15.00	96.11
24	132KV Swat	132KV Line Swat-Khwaza Khela	SWT-3	ISO	28.471	TBA, TYD, TM	LYNEX	488	183	13-06-19	13.00	37.50
25	132KV Khwaza khela	132KV Line Khwaza Khela-Madyan	KWK-2	ISO	20.000	TBA, TYD, TM	LYNEX	488	45	05-06-19	06.00	9.22
		132KV Line Khwaza Khela-Sangla Par	KWK-3	ISO	20.460	TBA, TYD, TM	LYNEX	488	54	05-06-19	05.00	11.07
26	Darral Khwar P/House (Madyan)	132KV Line Darral Khwar-Madyan-CCT-1	E5Q1	MYN-2	8.000	JKD,ED,ZM	RAIL	868	0	-	-	0.00
		132KV Line Darral Khwar-Madyan-CCT-2	E6Q1	MYN-3	8.000	JKD,ED,ZM	RAIL	868	178	15-06-19	12.00	20.51
27	132KV Mardan-3	132KV Line Mardan-3 - Charsadda	MDN-2	ISO	27.930	TBA,SPA	LYNEX	488	322	03-06-19	00.00	65.98
	SS&TL DIVISION PESCO BANNU											
1	220KV Domail (Bannu)	132KV Line Domail (Bannu)-Karak	E7Q1	KRK-1	37.850	ZM-1,ZM-30 ZM-60	LYNEX	488	400	01-06-19	19.00	81.97
		132KV Line Domail (Bannu) -Gurguri	E6Q1	GRI-2	98.630	ZM-1,ZM-30 ZM-60	LYNEX	488	400	03-06-19	01.00	81.97
		132KV Line Domail (Bannu)-Bannu CCT-2	E1Q1	BNU-1	10.260	ZM	LYNEX	488	360	26-06-19	22.00	73.77
		132KV Line Domail (Bannu)-Bannu CCT-1	E2Q1	BNU-5	10.260	ZM	LYNEX	488	360	06-06-19	22.00	73.77
		132KV Line Domail-Sarai Nourang.	E10,Q1	SRN-1	22.790	ZM	LYNEX	488	240	18-06-19	21.00	49.18
		132KV Line Domail-Taja Zai Express section.	E11,Q1	TJZ-1	47.440	ZM	LYNEX	488	130	21-06-19	21.00	26.64
2	220KV D.I.Khan	132KV Line D.I.Khan-Pezu CCT-1	E5Q1	PZU-3	32.760	ZM	Rail	868	242	01-06-19	20.00	27.88
		132KV Line D.I.Khan-Pezu CCT-2.	E7Q1	PZU-4	32.760	ZM	Rail	868	248	04-06-19	10.00	28.57
3	132KV Kohat	132KV Line Kohat-Lachi CCT-1	KHN-4	LCH-1	29.050	ZM-1,ZM-30 ZM-60	LYNEX	488	110	04-06-19	02.00	22.54
		132KV Line Kohat-Gurguri-Circuit # 2	KHN-5	GRI-1	84.080	ZM-1,ZM-30 ZM-60	LYNEX	488	60	03-06-19	00.00	12.30
4	132KV Karak	132KV Line Karak-Lachi sec;	KRK-2	LCH-2	66.130	ZM	LYNEX	488	117	02-06-19	22.00	23.98
5	132KV Bannu	132KV Line Bannu-Mir Ali-Miran Shah	BNU-6	ISO	60.140	ZM,TBA, TYD,TM	LYNEX	488	240	21-06-19	14.00	49.18
		66-KV Line Bannu-Kurrum Garhi	BNU-3	ISO	16.730	ZM, TUBLER	RABBIT, DOG	227	160	02-06-19	01.00	70.48
		66-KV Line Bannu-S/Naurang-Tajazai	BNU-2	-	46.050	ZM, TUBLER	RABBIT, DOG	227	0	In off position		
6	132KV S/Nourang	132KV Line S/Nourang-Taja Zai section	SRN-2	TJZ-5	24.250	ZM	LYNEX	488	264	03-06-19	02.00	54.10
7	132KV Gurguri	132KV Line Gurguri-Tall Section.	GRI-4	TAL-4	25.350	ZM	LYNEX	488	390	03-06-19	20.00	79.92

	NAME OF GSS/ POWER HOUSE.	NAME OF TRANSMISSION LINES	BREAKER CODE NO.		LENGTH IN (K.Ms)	TYPE OF TOWER	TYPE OF CONDUCTOR	Current Carrying Capacity of the Line (On Presumption of Wind Velocity as 0.61 m/s & 40 Degree Rise) "Amp"	MAX LOAD (Amps)	Date	Time	% AGE Loading
			CONTR-OLLING	Other End								
8	132KV Noor Ahmad Wali	132KV Line Noor Ahmad Wali-D.I.Khan a/w In Out Prova	NAW-2	PRV-1 DIK-3	97.500	ZM	LYNEX	488	342	12-06-19	04.00	70.08
9	132KV Toonsa	132KV Line Tonsa-D.I.Khan CCT-2	TSF-1	DIK-2	96.000	ZM	LYNEX	488	290	19-06-19	22.00	59.43
10	132KV Prova	132KV Line Prova-Gomal University DIKhan CCT-1	PRV-2	GMU-1	24.850	ZM	LYNEX	488	320	12-06-19	04.00	65.57
11	132KV Gomal University DIKhan	132KV Line Gomal University DIKhan	GMU-2	DIK-3	21.080	ZM	LYNEX	488	296	12-06-19	04.00	60.66
12	132KV D.I.Khan	132KV Line D.I.Khan-Kulachi	DIK-1	KCH-2	68.000	TBA,ZM1, ZM 30	LYNEX	488	300	07-06-19	06.00	61.48
		66-KV Line D.I.Khan-Tank	DIK-6	TNK-1	65.660	TUBLER	RABBIT	227	0	-	-	-
		66-KV Line D.I.Khan-Kulachi-Draban	DIK-7	ISO	88.230	SM	DOG		No Load			
			DIK-6					346	0	-	-	-
		66-KV Line D.I.Khan-Band Kurai	DIK-5	ISO	29.000	SM	DOG	346	204	05-06-19	17.00	58.96
13	132KV Kulachi	132KV Line Kulachi-Tank	KCH-3	TNK-5	68.000	TBA,ZM1, ZM 30	LYNEX	488	260	04-06-19	08.00	53.28
		132KV Line Kulachi-Draban	KCH-4	ISO	28.652	ZM-1,ZM-30 ZM-60	LYNEX	488	59	03-06-19	10.00	12.09
14	Chashma P/House	132KV Line Chashma-D.I.Khan	E1Q1	DIK-4	84.100	ZM, Korean	LYNEX	488	290	05-06-19	18.00	59.43
15	132KV Left Bank Chashma	132KV Line Left Bank Chashma-D.I.Khan Section	CHM-3	DIK-8	85.440	ZM, Korean	LYNEX	488	330	12-06-19	05.00	67.62
16	132KV Daud Khel	66-KV Line Daud Khel-Trug-Tajazai	DKL-7	TJZ-2	63.630	TUBLER	DOG	346	233	19-06-19	10.30	67.34
17	132KV Tajazai	132KV Line Tajazai- Pezu, CCT-1	TJZ-6	PZU-2	37.441	SM,ZM	LYNEX	488	222	01-06-19	18.00	45.49
		132KV Line Tajazai- Pezu, CCT-2	TJZ-7	PZU-3	37.441	SM,ZM	LYNEX	488	215	02-06-19	18.00	44.06
18	66 KV Tajazai	66-KV Line Tajazai-Tank-T/Off Pezu	TJZ-3	TNK-7	72.050	TUBLER	RABBIT, DOG	227	0	0	00.00	0.00
19	Gomal Zam Dam P/House	132KV D/C Line Gomal Zam Dam-Tank section	E1Q1	TNK-9	58.400	ZM	LYNEX	488	43	12-06-19	10.00	8.81
20	132KV Tank	132KV Line Tank-Wana (TESCO)	TNK-10	WANA-2	105.000	ZM-1	LYNEX	488	91	04-06-19	13.00	18.65
		66-KV Line Tank-Old Tank-Pezu-Tajazai	TNK-7	TJZ-3	77.870	TUBLER	RABBIT, DOG	227	80	04-06-19	06.00	35.24
		66-KV Line Tank (132KV)-Jandola sec: under (TESCO)	TNK-8	JDL-2	37.160	SM	DOG	346	150	01-06-19	17.00	43.35
	SS&TL DIVISION PESCO ABBOTTABAD											
1	220KV Burhan	132KV Line Burhan-In Out Tarnawa-Haripur Circuit # 1	E9Q1	HRP-4	54.970	ZM	LYNEX	488	326	10-06-19	13.00	66.80
		132KV Line Burhan-Haripur, CCT-2	E1Q1	HRP-6	33.510	ZM	LYNEX	488	326	10-06-19	13.00	66.80
2	220KV Mansehra	132KV Line Mansehra-old Mansehra	E6Q1	MSR-3	6.300	ZM	LYNEX	488	400	26-06-19	21.00	81.97
		132KV Line Mansehra-oghi	E7Q1	Iso	34.340	ZM	LYNEX	488	230	28-06-19	21.00	47.13
		132KV Line Mansehra- AMC- A/Abad	E2Q1	AMC-2		BC,TYD, TBA, ZM	LYNEX	488	380	24-06-19	07.00	77.87
		132KV Line Mansehra- old Mansehra	E4Q1	ISO		BC,TYD, TBA, ZM	LYNEX	488	180	07-06-19	17.00	36.89
3	132KV Haripur	132KV Line Haripur-Havellian CCT-1	HRP-7	HVN-1	20.480	TBA, TM	LYNEX	488	200	24-06-19	11.00	40.98
		132KV Line Haripur-Abbottabad CCT-2	HRP-8	ABN-3	49.180	ZM	LYNEX	488	160	24-06-19	11.00	32.79
		132KV Line Haripur- Hattar-Wah	HRP-3	WAH-3	28.340	ZM, TM	LYNEX	488	150	27-06-19	12.00	30.74
4	132KV Kholian Bala (Havellian)	132KV Line Havellian-Abbottabad	HVN-2	ABN-1	24.000	TBA, TM	LYNEX	488	156	29-06-19	16.00	31.97

	NAME OF GSS/ POWER HOUSE.	NAME OF TRANSMISSION LINES	BREAKER CODE NO.		LENGTH IN (K.Ms)	TYPE OF TOWER	TYPE OF CONDUCTOR	Current Carrying Capacity of the Line (On Presumption of Wind Velocity as 0.61 m/s & 40 Degree Rise) "Amp"	MAX LOAD (Amps)	Date	Time	% AGE Loading
			CONTR-OLLING	Other End								
5	132KV Abbottabad	132KV Line Abbottabad-AMC Abbottabad	ABN-2	ISO	6.000	BC,TYD, TBA, ZM	LYNEX	488	201	02-06-19	20.00	41.19
		132KV Line Abbottabad-Nathiagali	ABN-4	ISO	19.440	ZM,TYD,TM	LYNEX	488	28	05-06-19	06.00	5.74
6	132KV AMC A/Abad	132KV Line AMC Abbottabad-Mansehra	AMC-2	ISO	14.450	BC,TYD, TBA, ZM	LYNEX	488	375	29-06-19	11.00	76.84
7	132KV Mansehra	132KV Line Mansehra-Balakot	MSR-2	ISO	41.400	BC,TYD, TBA, ZM	LYNEX	488	410	05-06-19	14.00	84.02
8	132KV Oghi	132KV Line Oghi-Battal	OGH-2	ISO	15.230	BC,TYD, TBA, ZM	LYNEX	488	168	25-06-19	23.00	34.43
9	132KV Balakot	132KV Line Balakot-Muzaffarabad	GHL-2	MZB-1	27.360	TYD,TM,ZM	LYNEX	488	416	12-06-19	16.00	85.25
10	132KV Hattar	132KV Line Hattar-Saddi Cement Factory	HTR-2	ISO	4.800	ZM,TYD,TBA	LYNEX	488	80	23-06-19	13.00	16.39
		132KV Line Hattar-Bestway C/Factory	HTR-3	ISO	6.000	ZM,TYD,TBA	LYNEX	488	30	27-06-19	07.00	6.15
		132KV Line Hattar-Haripur section.	HTR-4	HRP-3	24.340	TYD,TM,ZM	LYNEX	488	270	10-06-19	13.00	55.33
11	132KV Wah	132KV Line Wah-Hattar	WAH-3	HTR-1	28.340	ZM, TM	LYNEX	488	500	27-06-19	09.00	102.46
		132KV Line Wah-Nishat Tarbela Section	WAH-7	ISO	35.000	ZM, TM	ZAIGALOW/LYNEX	488	320	18-06-19	18.00	65.57
		132KV Line Wah-Gadoon Amazai section	WAH-8	GAZ-2	47.780	ZM, TM	ZAIGALOW/LYNEX	488	320	18-06-19	18.00	65.57
		132KV Line Wah-Mustehkam Cement Fac: section	WAH-9	ISO	11.000	BBA,TYD	LYNX	488	119	01-06-19	14.00	24.39
		66-KV Line Wah-Haripur	WAH-11	ISO	32.000	R/H-Pole	DOG	346	160	29-06-19	15.00	46.24
12	132KV N/Tarbela	132KV Line Nishat Trbela-R/Bank Tarbela-G/Amazai	NST-2	RBT-2	12.500	ZM, TM	LYNEX	488	276	18-06-19	16.00	56.56
13	66 KV Haripur	66-KV Line Haripur-A/Abad-T/Off Havelian	HRP-2	ISO	44.200	R/H-Pole	DOG	346	0	By Pass		
14	Jagran P/House	132KV Line Jagran P/House-Noseri	JRN-1	NUS-3	30.780	ZM	LYNEX	488	131	04-06-19	12.00	26.84
15	132KV Muzaffarabad	132KV Line Muzaffarabad-Noseri section	MZB-5	NUS-2	30.780	ZM	LYNEX	488	110	21-06-19	07.00	22.54
		132KV Line Muzaffarabad-In Out Rampura-Hattian	MZB-4	RPR-3	36.000	ZM	LYNEX	488	400	15-06-19	11.00	81.97
		33KV Line M/Abad-Majohi-Chatter Class	MZB-3	ISO	36.980	STP	DOG	346	0	-	-	-
		33-KV Line Muzaffarabad-Noseri	MZB-2	ISO	35.200	STP	DOG	346	0	-	-	-
16	132KV Noseri	132-KV Line Noseri-Muzafarabad section.	NUS-2	MZB-5	37.100	ZM	LYNEX	488	128	04-06-19	07.00	26.23
17	132KV Battal	33-KV Line Battal-Thakot	BTL-2	ISO	55.000	STP	DOG	346	200	20-06-19	23.00	57.80
18	33 KV Thakot	33-KV Line Thakot-Pattan,T/Off Bisham	THK-2	ISO	74.000	STP	DOG	346	0	-	-	0.00
19	Patrind P/House	132-KV Line Patrind P/House-Rampura cct-1	E2Q1	RPR-1	6.000	ZM	Rail	625	380	29-06-19	11.00	60.80
		132-KV Line Patrind P/House-Rampura cct-2	E5Q1	RPR-2	6.000	ZM	Rail	625	360	24-06-19	07.00	57.60
20	132KV Rampura	132-KV Line Rampura-Hattian section.	RPR-4	ISO	37.720	ZM	Lynex	488	385	23-06-19	07.00	78.89

Superintending Engineer (E)
GSO Circle PESCO
Peshawar

PESCO

MAXIMUM LOAD ON POWER TRANSFORMERS FOR 06/2019 UNDER GSO CIRCLE PESHAWAR

Sr; #	Name of Grid Station	Code #	Date of Comm:	Serial Number	Make	MVA Capacity	Voltage Ratio	Rated Amps	MAXIMUM LOAD RECORDED			
									Load (Amps)	Date	Time	%age
SS&TL Division PESCO Peshawar												
1	132KV Charsadda	T1	11-05-19	0	Chint	31.5/40	132/11	2008	1679	06-06-19	12.00	83.62
		T2	31-12-16	201507299	China	31.5/40	132/11	2008	1819	08-06-19	23.00	90.59
		T3	28-02-14	11300010	Siemens	20/26	132/11	1305	1260	03-06-19	23.00	96.55
2	132KV Dalazak	T1	16-03-10	-	Siemens	20/26	132/11	1305	630	28-06-19	00.00	48.28
		T2	01-11-11	-	HEC PAK	20/26	132/11	1305	751	27-06-19	22.00	57.55
		T3	21-01-16	1110009	PEL	20/26	132/11	1305	760	01-06-19	21.00	58.24
3	132KV Gumbat	T1	25-10-96	139975	Electroputer	10/13	132/11	653	380	03-06-19	19.00	58.19
		T2	30-01-14	T-5-179	HEC	20/26	132/11	1305	610	02-06-19	15.00	46.74
4	132KV Hangu	T3	06-08-12	-	PEL	20/26	132/11	1305	1280	04-06-19	03.00	98.08
		T4	06-08-12	-	HEC	20/26	132/11	1305	790	01-06-19	21.00	60.54
5	132KV Hayatabad	T1	01-07-11	-	Siemens	31.5/40	132/11	2008	1276	26-06-19	01.00	63.55
		T2	05-08-04	10400026	Siemens	20/26	132/11	1305	1180	25-06-19	17.00	90.42
		T3	07-06-13	-	Siemens Pak	31.5/40	132/11	2008	1131	15-06-19	22.00	56.32
6	132KV Jamrud	T1	02-03-14	198962	PEL	31.5/40	132/11	2008	1615	20-06-19	15.00	80.43
		T2	01-02-17	-	China	31.5/40	132/11	2008	1163	24-06-19	12.00	57.92
		T3	28-03-00	Sr;#	China	20/26	132/11	1305	1300	01-06-19	16.00	99.62
		T4	07-01-17	-	China	31.5/40	132/11	2008	1100	29-06-19	14.00	54.78
7	132KV Kohat	T1	26-05-15	135427	Siemens	31.5/40	132/11	2008	1860	04-06-19	20.00	92.63
		T2	26-02-10	1090049	Siemens	31.5/40	132/11	2008	1990	08-06-19	20.00	99.10
		T3	30-05-12	7211011	Pauwels	30/37.5	132/66/11	328	130	02-06-19	15.00	39.63
		T4	17-08-03	T5-21	HEC	20/26	132/11	1305	1175	27-06-19	16.00	90.04
8	132KV Kotal Town Kohat	T1	06-11-15	-	PEL	31.5/40	132/11	2008	985	26-06-19	03.00	49.05
		T2	15-06-12	HV 1110011	PEL	20/26	132/11	1305	1165	21-06-19	20.00	89.27
9	132KV Lachi	T1	25-05-16	-	Iranian	20/26	132/11	1305	690	03-06-19	21.00	52.87
		T2	11-09-12	-	HEC	20/26	132/11	1305	750	02-06-19	03.00	57.47
10	132KV Mattani	T1	30-06-96	81119035	AEG	5.4	66/33/11	263	0	No Load		0.00
		T2	12-12-07	8530390	Iran	20/26	132/11	1305	1240	04-06-19	04.00	95.02
		T3	07-01-14	138937	Siemens	20/26	132/11	1305	1280	03-06-19	00.00	98.08
		T4	07-10-17	-	Electroputer	20/26	132/11	1305	1060	02-06-19	19.00	81.23
11	132KV Peshawar Industrial	T1	05-07-13	1120016	Siemens	31.5/40	132/11	2008	1670	19-06-19	14.00	83.17
		T2	11-08-15	11500-15	PEL	31.5/40	132/11	2008	1860	27-06-19	00.00	92.63
		T3	19-10-09	10900027	Siemens	40	132/11	2008	2000	02-06-19	01.00	99.60
12	132KV Pabbi	T1	08-02-17	201507304	China	31.5/40	132/11	2008	1570	02-06-19	15.00	78.19
		T2	28-03-18	-	Chint China	40	132/11	2008	1040	03-06-19	15.00	51.79
		T3	01-07-14	-	Siemens	20/26	132/11	1305	970	26-06-19	22.00	74.33

13	132KV Peshawar Cantt	T1	10-04-17	-	China	31.5/40	132/11	2008	1560	24-06-19	15.00	77.69
		T2	22-02-17	201507308	China	31.5/40	132/11	2008	1470	26-06-19	16.00	73.21
		T3	28-07-08	8530342	Iran Transfo	20/26	132/11	1305	1180	13-06-19	16.00	90.42
		T4	10-08-12	-	HEC PAK	20/26	132/11	1305	740	29-06-19	02.00	56.70
14	132KV Peshawar City	T1	29-06-13	11200018	Siemens	31.5/40	132/11	2008	1150	25-06-19	00.00	57.27
		T2	07-12-12	11200030	PEL	31.5/40	132/11	2008	1880	24-06-19	21.00	93.63
		T3	23-01-14	9230019	PEL	31.5/40	132/11	2008	1420	25-06-19	23.00	70.72
15	132KV Peshawar Fort	T1	30-10-13	1120008	Siemens	40	132/11	2008	1100	29-06-19	14.00	54.78
		T2	30-04-14	1120176	PEL	31.5/40	132/11	2008	1670	27-06-19	14.00	83.17
16	132KV Peshawar University	T1	08-01-13	1120041	PEL	31.5/40	132/11	2008	1800	28-06-19	01.00	89.64
		T2	21-02-13	1120017	Siemens	31.5/40	132/11	2008	1815	08-06-19	07.00	90.39
		T3	25-01-14	1130018	PEL	31.5/40	132/11	2008	1460	17-06-19	16.00	72.71
		T4	19-08-17	-	Chint China	31.5/40	132/11	2008	0	No Load		0.00
17	132KV Rahman Baba	T1	05-03-16	--	PEL	31.5/40	132/11	2008	1220	01-06-19	23.00	60.76
		T2	01-03-14	1130016	PEL	31.5/40	132/11	2008	1780	03-06-19	17.00	88.65
		T3	22-09-11	T5-126	HEC	20/26	132/11	1305	990	25-06-19	23.00	75.86
18	132KV Rajjar	T1	26-09-12	T5-167	HEC	20/26	132/11	1305	1198	29-06-19	13.00	91.80
19	132KV Sakhi Chashma	T1	19-02-14	--	Siemens	20/26	132/11	1305	1084	28-06-19	00.00	83.07
		T2	09-11-10	-	HEC	20/26	132/11	1305	950	12-06-19	09.00	72.80
		T3	14-12-17	1080002	Siemens	20/26	132/11	1305	520	30-06-19	08.00	39.85
20	132KV Shabqadar	T1	15-01-95	102240	Elprom	10/13	66/11	653	610	02-06-19	18.00	93.42
		T2	28-02-00	111327-1	China	31.5/40	132/66/11	349.9	210	23-06-19	17.00	60.02
		T3	26-03-17	0	China	40	132/11	2008	1620	02-06-19	23.00	18.00
		T4	16-05-04	27211002	Siemens	20/26	132/11	1305	1300	02-06-19	20.00	99.62
		T5	17-08-11	-	HEC	20/26	132/11	1305	1300	20-06-19	22.00	99.62
21	132KV Shahibagh	T1	03-11-11	81-25596	Siemens	20/26	132/11	1305	1210	19-06-19	16.00	92.72
		T2	1982	122875	Elta	30/37.5	132/66/11	328	0	00-01-00	00.00	0.00
		T3	24-04-14	1130021	PEL	31.5/40	132/11	2008	1580	14-06-19	00.00	78.69
		T4	07-12-09	16-2017	HEC	31.5/40	132/66	349	280	24-06-19	09.00	80.23
		T5	29-12-13	-	PEL	31.5/40	132/11	2008	1470	26-06-19	00.00	73.21
22	132KV Tall	T1	22-08-91	28080	Siemens	30/37.5	132/66/11	328	200	25-06-19	09.00	60.98
		T2	09-03-08	T-05-102	HEC	20/26	132/11	1305	1220	03-06-19	20.00	93.49
		T3	10-03-17	-	HEC	20/26	132/11	1305	620	03-06-19	21.00	47.51
23	132KV Tangi	T1	30-09-04	3N 7036	Siemens	20/26	132/11	1305	1063	03-06-19	16.00	81.46
		T2	23-05-17	201507309	China	31.5/40	132/11	2008	1910	03-06-19	18.00	95.12
		T3	16-12-14	-	HEC	20/26	132/11	1305	1290	25-06-19	21.00	98.85
		T4	03-11-16	-	HEC	20/26	132/11	1305	440	17-06-19	08.00	33.72
24	132KV Warsak	T1	29-03-15	-	Siemens	20/26	132/11	1305	1215	03-06-19	20.00	93.10
		T2	27-01-11	326001	HEC	20/26	132/11	1305	1285	02-06-19	21.00	98.47
		T3	16-05-19		HEC	20/26	132/11	1305	0	-	-	0.00
25	132KV Wapda House	T1	24-10-18	0	China	20/26	132/11	1305	170	No Load		13.03
		T2	24-10-18	0	China	20/26	132/11	1305	350	26-06-19	00.00	26.82
26	66KV Badaber	T1	04-03-03	981202	GE (USA)	7.5	66/11	393	410	11-06-19	07.00	104.33
		T2	06-04-76	900402	Legnano	10	66/11	525	453	27-06-19	13.00	86.29
27	66KV Kohat	T1	14-01-98	138927	Electroputer	6.3	66/11	316	0	No Load		0.00
		T2	14-01-65	25364	Insaldo	3	66/11	150	75	26-06-19	23.00	50.00

SS&TL Division PESCO Mardan

1	132KV Chakdara	T1	25-02-15	165695	Elta	40	132/66	350	283	04-06-19	22.00	80.86
		T2	01-08-15	-	PEL	31.5/40	132/11	2008	1000	19-06-19	15.00	49.80
		T3	22-07-17	201507294	Chint China	31.5/40	132/11	2008	1700	05-06-19	06.00	84.66
		T4	29-03-14	T5-187	HEC	20/26	132/11	1305	1050	20-06-19	15.00	80.46
2	132KV Dargai	T2	28-04-17	-	PEL	31.5/40	132/11	2008	1250	22-06-19	15.00	62.25
		T3	29-01-13	-	PEL	20/26	132/11	1305	1020	14-06-19	22.00	78.16
		T4	17-08-16	201507301	Chint China	31.5/40	132/11	2008	1630	22-06-19	15.00	81.18
3	132KV Gadoon Amazai	T1	04-11-91	138951	Electroputer	20/26	132/11	1305	170	29-06-19	02.00	13.03
		T2	03-10-91	138945	Electroputer	20/26	132/11	1305	640	16-06-19	06.00	49.04
		T3	13-06-14	-	Ansaldo	20/26	132/11	1305	760	24-06-19	01.00	58.24
		T4	13-01-12	T5-150	H.E.C	20/26	132/11	1305	500	22-06-19	16.00	38.31
4	132KV Hussai	T1	13-07-13	1307382	Siemens	20/26	132/11	1305	995	23-06-19	15.00	76.25
		T2	21-11-07	T5-98	HEC	20/26	132/11	1305	940	01-06-19	03.00	72.03
		T3	06-05-16	HV1140023	PEL	20/26	132/11	1305	1250	04-06-19	05.00	95.79
5	132KV Jalala	T3	12-12-15	1150016	PEL	40	132/11	2008	1640	09-06-19	21.00	81.67
		T4	18-05-08	75-100	HEC	20/26	132/11	1305	1190	03-06-19	18.00	91.19
		T5	01-11-17	201603247	Chint China	31.5/40	132/11	2008	1670	03-06-19	16.00	83.17
6	132KV Jehangira	T1	24-04-15	1140025	PEL	20/26	132/11	1305	1020	03-06-19	00.00	78.16
		T2	18-05-09	10900023	Siemens	20/26	132/11	1305	1290	01-06-19	22.00	98.85
		T3	30-09-11		HEC	20/26	132/11	1305	1265	18-06-19	12.00	96.93
7	132KV Khwaza Khela	T1	04-01-10	T5-139	HEC	20/26	132/11	1305	1040	05-06-19	06.00	79.69
		T2	25-07-14	-	Siemens	20/26	132/11	1305	1220	05-06-19	05.00	93.49
8	132KV Katlang	T1	18-10-10	T5-143	PEL Pak	20/26	132/11	1305	1180	27-06-19	02.00	90.42
9	132KV Dobian	T1	08-04-14	307036	ANSALDO	10/13	132/11	653	320	20-06-19	15.00	49.00
		T2	30-12-15	-	Iran	20/26	132/11	1305	890	20-06-19	15.00	68.20
10	132KV Mardan-2	T1	15-07-16	1160031	PEL	40	132/11	2008	1570	27-06-19	23.00	78.19
		T2	18-07-16	201507292	Chint China	40	132/11	2008	1340	02-06-19	15.00	66.73
11	132KV Nizampur	T1	13-09-90	830900123	Toshiba	10/13	132/11	653	500	19-06-19	15.00	76.57
12	132KV Nowshera City	T1	18-06-16	201507297	Chint China	40	132/11	2008	1717	19-06-19	16.00	85.51
		T2	25-05-12	67484	Elprom	5	11/66	43.74	18.3	11-06-19	04.00	41.84
		T3	05-03-17	1150057	PEL	31.5/40	132/11	2008	1620	20-06-19	16.00	80.68
		T4	25-02-14	11300002	Siemens	20/26	132/11	1305	1280	03-06-19	15.00	98.08
13	132KV Nowshera Indl	T1	27-04-94	93802030	SHEN YANG China	20/26	132/11	1305	1070	26-06-19	14.00	81.99
		T2	31-05-14	T5-181	HEC	20/26	132/11	1305	1032	27-06-19	23.00	79.08
14	132KV R.B.Tarbela	T1	22-02-91	138933	Electroputer	20/26	132/11	1305	1130	25-06-19	14.00	86.59
		T2	09-06-16	135275	Ganz	20/26	132/11	1305	730	24-06-19	12.00	55.94
		T3	15-10-14	112026	Elprom	10/13	132/11	653	120	14-06-19	12.00	18.38
15	132KV Swabi	T1	14-03-11	11100014	Siemens	20/26	132/11	1305	1020	03-06-19	15.00	78.16
		T2	29-03-16	HV1150014	PEL	31.5/40	132/11	2008	1615	03-06-19	16.00	80.43
		T3	17-10-12	1120179	PEL	31.5/40	132/11	2008	1260	23-06-19	15.00	62.75
		T4	03-09-15	11300013	Siemens	20/26	132/11	1305	1115	03-06-19	15.00	85.44

16	132KV Swat	T1	16-10-08	8631053	Iran	20/26	132/11	1305	960	03-06-19	11.00	73.56
		T2	22-01-17	973847	Chint China	31.5/40	132/11	2008	1560	26-06-19	15.00	77.69
		T3	22-11-16	201507288	China	31.5/40	132/11	2008	1700	19-06-19	20.00	84.66
		T4	11-05-84	106638	Elprom	6.3/7.6	132/11	381	0	No Load		0.00
		T5	28-08-13	1130009	Siemens	20/26	132/11	1305	1210	20-06-19	13.00	92.72
17	132KV Shagla Par	T1	16-09-07	106630	Elprom	6.3/7.6	132/11	381	200	01-06-19	18.00	52.49
		T2	23-11-14	830900124	Toshiba	10/13	132/11	653	380	05-06-19	05.00	58.19
18	132KV Timergara	T1	18-01-96	140634	Electroputer	40	132/66	350	225	01-06-19	18.00	64.29
		T2	28-07-05	806472	HEC	20/26	132/11	1305	850	05-06-19	05.00	65.13
		T3	13-12-08	74010-7	China	10/13	132/11	653	400	03-06-19	12.00	61.26
		T4	04-08-12	15-147	HEC	20/26	132/11	1305	930	05-06-19	05.00	71.26
		T5	11-08-16	HV 1140031	PEL	20/26	132/11	1305	1280	05-06-19	04.00	98.08
19	132KV Daggar	T1	23-12-10	I H 9349 T2	Meiden Sha	20/26	132/11	1305	1020	22-06-19	16.00	78.16
		T2	15-10-11	-	PEL Pak	20/26	132/11	1305	1120	22-06-19	14.00	85.82
		T3	02-05-17	1160033	PEL Pak	31.5/40	132/11	2008	1420	22-06-19	15.00	70.72
20	132KV Bari Kot	T1	21-05-17	T-5 153	HEC	20/26	132/11	1305	980	02-06-19	10.00	75.10
		T2	-	-	HEC	20/26	132/11	1305	0	No Load		0.00
21	132KV Madyan	T1	30-06-16	T-5138	HEC	20/26	132/11	1305	540	05-06-19	06.00	41.38
22	66KV Daggar	T1	05-10-16	S891011	Electroputer	6.3	66/11	381	0	0	00.00	0.00
23	66KV Dir	T1	28-07-97	102238	Elprom	10/13	66/11	653	620	28-06-19	23.00	94.95
		T2	16-10-95	94436	Elprom	5/6.25	66/33	121	0	No Load		0.00
24	66KV Kheshki	T1	1960	44115	J&P	2.5	66/3.3	437	260	22-06-19	16.00	59.50
25	66KV Timergara	T1	16-11-77	94488	Elprom	5/6.25	66/33	121	120	05-06-19	01.00	99.17
		T2	30-06-90	A-73021-1	China	10/13	66/11	653	470	24-06-19	14.00	71.98
26	66KV Wari	T1	20-05-03	102239	Elprom	10/13	66/11	653	400	04-06-19	00.00	61.26
		T2	13-12-16	102826	Elprom	10/13	66/11	653	520	17-06-19	10.00	79.63
27	33KV Drosh	T1	13-05-01	31349	Siemens	1.5	33/11	79	0	No Load		0.00
28	33KV Jutilasht	T1	22-10-95	45583	Siemens	4	33/11	201	0	No Load		0.00
		T2	30-07-08	199765	PEL	4	33/11	201	0			0.00
29	132KV Drosh	T1	29-01-18	-	Trafo Union	20/26	132/11	1305	138	21-06-19	12.00	10.57
30	132KV Jutilasht	T1	23-01-18	-	Toshiba Japan	10/13	132/11	653	500	19-06-19	15.00	76.57
31	132KV Mardan-3	T1	28-05-18	201603240	China	31.5/40	132/11	2008	880	28-06-19	23.00	43.82
		T2	00-01-00	0	China	31.5/40	132/11	2008	0	Energized on No Load		0.00

SS&TL Division PESCO Bannu

1	132KV Bannu	T1	21-04-88	3306-29816	Legnano	15.9/10.7/5.25	132/66/33	87.5	0	0	00.00	0.00
		T2	16-01-81	3306-29817	Legnano	15.9/10.7/5.25	132/66/33	87.5	70	02-06-19	03.00	80.00
		T3	30-12-89	135426	Ganz	20/26	132/11	1305	1290	28-06-19	15.00	98.85
		T4	17-02-13	-	Siemens	31.5/40	132/11	2008	1790	03-06-19	18.00	89.14
		T5	16-09-15	-	PEL Pak	31.5/40	132/11	2008	1660	01-06-19	04.00	82.67
		T6	10-08-14	-	HEC	20/26	132/11	1305	1220	03-06-19	20.00	93.49
2	132KV D.I.Khan	T1	28-08-15	150009	PEL	31.5/40	132/11	2008	1620	04-06-19	20.00	80.68
		T2	17-11-92	138927	Electroputer	31.5/40	132/66	349.9	214	05-06-19	17.00	61.16
		T3	26-02-17	1150055	PEL	31.5/40	132/11	2008	1610	22-06-19	21.00	80.18
		T4	13-04-17	-	Chint China	31.5/40	132/11	2008	1620	06-06-19	18.00	80.68
		T5	15-05-14	LV-11400005	PEL Pak	31.5/40	132/11	2008	1820	04-06-19	22.00	90.64

3	132KV Gomal University DIKhan	T1	22-05-14	12B09549	TBA China	20/26	132/11	1305	390	16-06-19	17.00	29.89
		T2	22-05-14	12B09548	TBA China	20/26	132/11	1305	370	11-06-19	21.00	28.35
4	132KV Gurguri	T1	05-10-16	112608	Elprom	10/13	132/11	653	200	29-06-19	12.00	30.63
5	132KV Karak	T1	10-04-08	-	HEC	20/26	132/11	1305	1246	22-06-19	20.00	95.48
		T2	11-11-03	-	Elta	20/26	132/11	1305	1253	25-06-19	22.00	96.02
		T3	03-06-16	-	Iran Transfo	20/26	132/11	1305	1110	13-06-19	18.00	85.06
6	132KV Prova	T1	22-07-09	135286	Ganz	10/13	132/11	653	330	13-06-19	21.00	50.54
		T3	30-11-11	-	HEC PAK	20/26	132/11	1305	513	02-06-19	21.00	39.31
7	132/66KV Pezu	T2	03-05-12	-	CGE Italy	10/13	132/11	653	530	01-06-19	21.00	81.16
		T3	20-06-14	-	Siemens	10/13	132/11	653	480	02-06-19	16.00	73.51
8	132KV Serai Nourang	T1	20-03-14	138968	Electroputer	20/26	132/11	1305	1270	01-06-19	21.00	97.32
		T2	17-12-09	-	HEC	20/26	132/11	1305	1270	02-06-19	17.00	97.32
9	132KV Taja zai	T3	03-06-09	7452	Siemens	20/26	132/11	1305	1230	06-06-19	20.00	94.25
		T4	27-08-12	-	PEL	20/26	132/11	1305	1230	01-06-19	21.00	94.25
10	132KV Tank	T4	25-10-17	T-140	HEC Pak	20/26	132/11	1305	650	01-06-19	21.00	49.81
		T5	01-08-93	138824	Electroputer	31.5/40	132/66	349	170	04-06-19	06.00	48.71
		T6	04-06-10	138931	Electroputer	20/26	132/11	1305	860	01-06-19	21.00	65.90
		T7	24-09-16	-	PEL	20/26	132/11	1305	880	02-06-19	17.00	67.43
11	66KV Band Kurai	T1	15-11-18	90872	Elprom	10/13	66/11	653	590	03-06-19	21.00	90.35
		T2	18-04-07	95816	Elprom	10/13	66/11	653	580	06-06-19	08.00	88.82
12	132KV Draban	T2	13-12-18	0	0	20/26	132/11	1305	670	04-06-19	11.00	51.34
13	132 KV Kulachi	T2	02-07-18	54lypt11055	China	20/26	132/11	1305	640	22-06-19	00.00	49.04
14	66KV K/Garhi	T1	19-01-12	138918	Electroputer	6.3	66/11	316.29	260	25-06-19	16.00	82.20
		T2	10-12-93	138708	Electroputer	10/13	66/11	653	640	01-06-19	03.00	98.01
15	66KV Tajazai	T1	03-06-96	859602	Ganz	15	66/11	787	Load shifted to 132KV GSS Tajazai			
		T2	26-07-05	138918	Electroputer	10/13	66/11	653	570	02-06-19	22.00	87.29
16	66KV Tank	T1	08-11-85	--	Asea	2.5	66/11	131	Load Shifted to 132KV G/StationTank			

SS&TL Division PESCO Abbottabad

1	132KV Abbottabad	T1	30-05-99	138948	Electroputer	20/26	132/11	1305	875	29-06-19	16.00	67.05
		T2	30-06-92	4178135	Elta Poland	10/13	132/11	653	467	28-06-19	21.00	71.52
		T3	03-06-14	11300019	Siemens	20/26	132/11	1305	889	19-06-19	12.00	68.12
2	132KV AMC A/Abad	T1	24-06-07	8530332	Iran Transfo	20/26	132/11	1305	675	18-06-19	15.00	51.72
		T2	04-10-15	-	HEC	20/26	132/11	1305	810	17-06-19	20.00	62.07
3	132KV Balakot	T1	11-03-15	T-5 178	HEC	20/26	132/11	1305	610	15-06-19	21.00	46.74
4	132KV Battal	T1	15-07-11	-	HEC	20/26	132/11	1305	790	01-06-19	21.00	60.54
		T2	01-02-03	106730	Elprom	10/13	132/33	217	200	20-06-19	23.00	92.17
		T3	05-05-15	11400024	PEL	20/26	132/11	1305	770	05-06-19	05.00	59.00
5	132KV Haripur	T3	28-10-16	201507291	China	40	132/11	2008	1690	02-06-19	21.00	84.16
		T4	29-08-87	1029185	Iran Transfo	20/26	132/11	1305	990	18-06-19	00.00	75.86
		T5	27-05-14	11300020	Siemens	20/26	132/11	1305	840	21-06-19	13.00	64.37

6	132KV Hattar	T1	24-03-14	HV140002	PEL	40	132/11	2008	1645	18-06-19	13.00	81.92
		T2	12-08-09	10900035	Siemens	40	132/11	2008	1435	25-06-19	13.00	71.46
		T3	31-03-17	201609439	Chint China	40	132/11	2008	820	13-06-19	08.00	40.84
		T4	12-07-16	201507305	Chint China	40	132/11	2008	1200	25-06-19	09.00	59.76
7	132KV Hattain	T1	26-06-12	HSF 271300	HEC	10/13	132/11	653	590	04-06-19	19.00	90.35
8	132KV Havelian	T1	05-12-17	-	Chint China	31.5/40	132/11	2008	1350	29-06-19	17:00	67.23
		T2	05-12-17	-	Siemens	20/26	132/11	1305	0	No Load		0.00
9	132KV Mansehra	T1	10-08-90	81-260007	Iran Transfo	20/26	132/11	1305	1150	01-06-19	13.00	88.12
		T2	15-07-16	201507303	Chint China	40	132/11	2008	1790	03-06-19	16.00	89.14
		T3	29-08-14	-	Siemens	20/26	132/11	1305	1170	02-06-19	15.00	89.66
10	132KV Muzaffarabad	T1	28-03-82	25946	Insaldo	15/5/10	132/33/11	787	560	13-06-19	18.00	71.16
		T2	22-01-03	T.5.18	HEC	20/26	132/11	1305	900	18-06-19	19.00	68.97
		T3	02-09-83	110286	Electroputer	10/13	132/33	217	130	27-06-19	20.00	59.91
		T4	12-06-14	-	Siemens	20/26	132/11	1305	1090	17-06-19	17.00	83.52
11	132KV Nathia Gali	T1	15-05-17	10000004	Siemens	10/13	132/11	653	330	05-06-19	06.00	50.54
12	132KV Nishat Tarbela	T1	07-12-91	14338	CGE	15MVA	132/11	787	595	19-06-19	15.00	75.60
		T2	03-05-99	112606	Elprom	10/13	132/11	653	230	01-06-19	16.00	35.22
13	132KV Noseri	T1	21-12-09	81/25594	Trafo Union	10/13	132/11	653	410	04-06-19	19.00	62.79
14	132KV Oghi	T1	01-04-06	326001	Rade Koncar	10/13	132/11	653	250	30-06-19	21.00	38.28
		T2	01-08-14	81600012	Siemens	20/26	132/11	1305	560	03-06-19	22.00	42.91
15	132KV Rampura (AJK)	T1	-	-	China	20/26	132/11	1305	460	01-06-19	19.00	35.25
		T2	17-10-16	15.8	China	20/26	132/11	1305	375	02-06-19	19.00	28.74
16	66KV Abbottabad	T1	07-12-91	0-859602	Electroputer	10/13	66/11	653	0	In off position		0.00
		T2	1977	98485	Asea	2.5	66/33	44	0	In off position		0.00
17	66KV Haripur	T1	21-06-96	C-859612E	GE (USA)	5.6	66/11	294	150	27-06-19	16.00	51.02
		T2	15-01-99	--	China	6.3	66/11	316	220	03-06-19	13.00	69.62
		T3	09-09-05	102824	Elprom	10/13	66/11	653	380	08-06-19	21.00	58.19
18	66KV Havelian	T1	1988	77472	Elprom	10/13	66/11	653	230	15-06-19	09.00	35.22
		T2	16-09-13	98392	Elprom	10/13	66/11	653	25	18-06-19	16.00	3.83
19	33KV Thakot	T1	14-04-01	811700018	Siemens	4	33/11	201	220	01-06-19	09.00	109.45
		T2	24-11-03	811700015	Siemens	4	33/11	201	220	01-06-19	03.00	109.45
		T3	13-04-11	-	China	4	33/11	201	180	01-06-19	01.00	89.55
20	33KV Pattan	T1	01-11-06	81700017	Siemens	4	33/11	201	130	09-06-19	21.00	64.68
21	33KV Besham	T1	13-09-15	20970033	Siemens	4	33/11	201	190	15-06-19	21.00	94.53
22	33KV Chatar Class	T1	14-11-09		Siemens	4	33/11	201	0	-	-	0.00
23	33KV Majhoi	T1	23-05-05		Siemens	4	33/11	201	0	-	-	0.00

Superintending Engineer (E)
GSO Circle PESCO
Peshawar